ALUTECH
GROUP OF COMPANIES

Profile systems

ALUTECH ALT W72

Windows and doors with thermal break

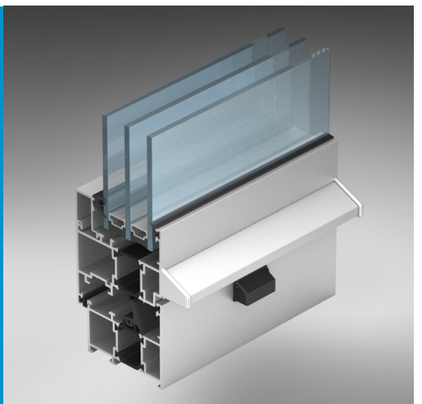

ALUTECH ALT W72
Windows and doors
with thermal break

Classic windows

Integrated windows

Terrace door

Classic doors

Automatic thresholds

Integrated doors

Sills installation
in ALT BF73 system

Standard junctions

Pictograms

Attention

Technical information

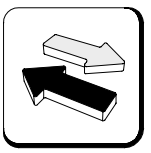
Can be replaced

See page

Upside down view

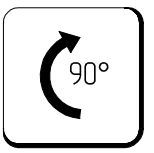

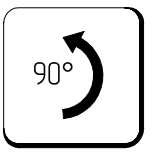

Turn

Perform the indicated operation

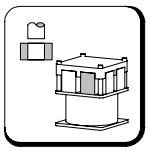
Pneumatic punching machine

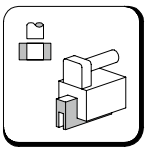
Manual punching machine

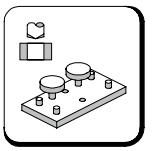
Jig

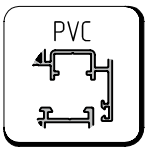

PVC hardware groove

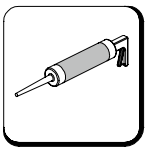
Silicone sealant

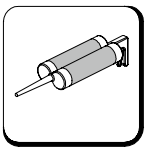
2-component polyurethane glue

Glue for EPDM

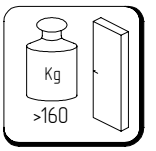

Вес дверной створки

Hold time

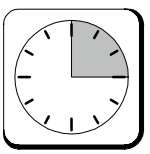
Hold 15 min

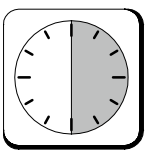
Hold 30 min

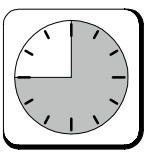
Hold 45 min

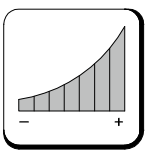
Performances improvement

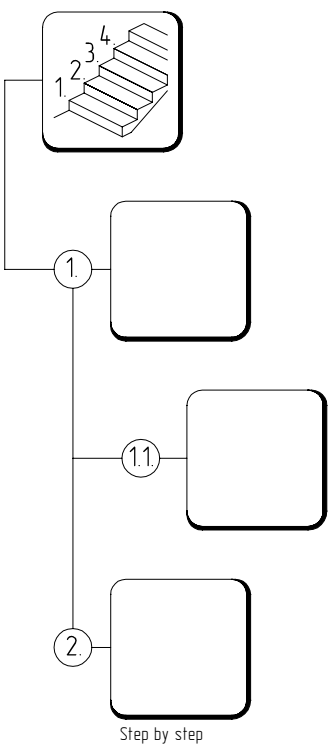

Step by step

Measure

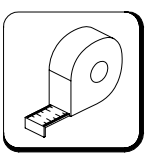
Measure

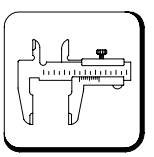
Measure

Clean the surface

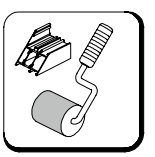
Apply glue

Apply sealant

Mark

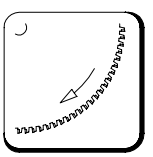
Cut

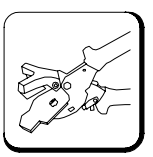
Cut

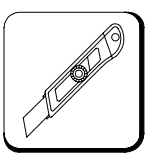
Cut

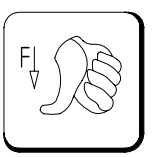
Push on

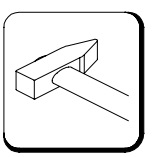
Strike

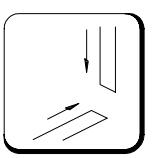
Join

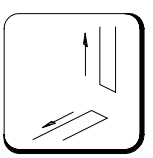
Disjoin

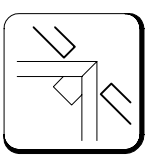
Clamp

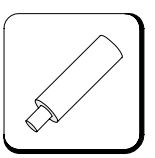
Drift pin

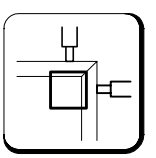
Fix by pins

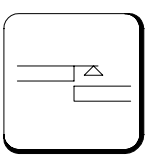
Fix by pins

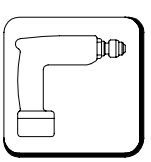
Drill

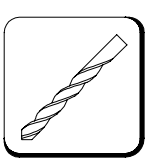
Hole

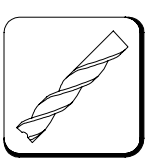
Mill

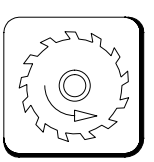
Mill

Remove

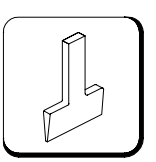
Use trowel

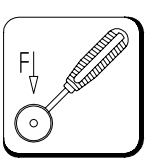
Roller for gasket installation

ALUTECH ALTW72
Windows and doors
with thermal break

CLASSIC WINDOWS

01.01.01 System description

01.02.01 Order information

01.03.01 Accessories

01.04.01 Table of glazing

01.05.01 Sections and junctions

01.06.01 Examples of standard system calculation

01.07.01 Machining and assemblage

01.08.01 Statics

W72 window

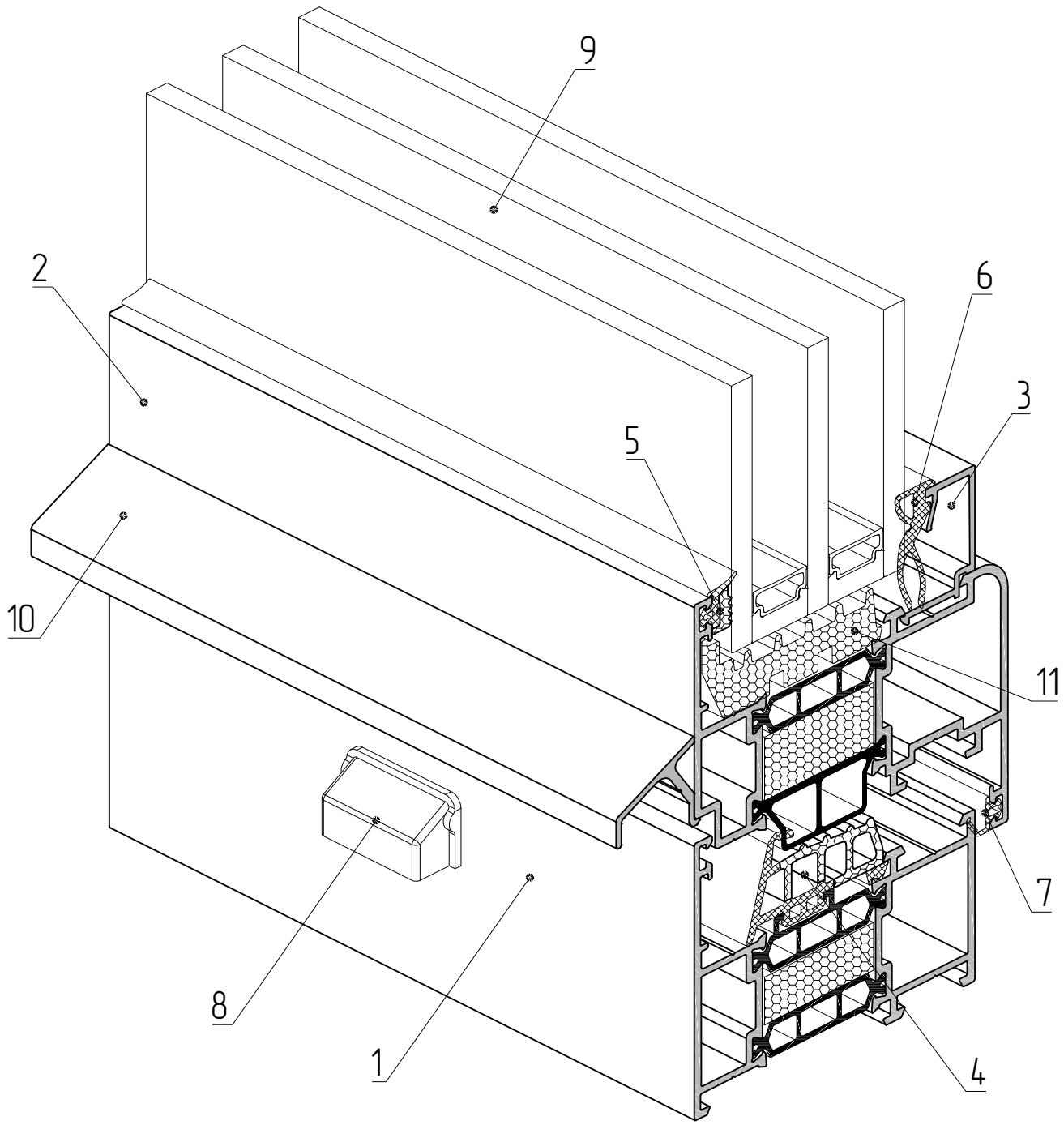

1 – AYPC.W72.0102 frame profile
2 – AYPC.W72.0202 sash profile
3 – AYPC.C48.0602 glass bead profile
4 – FRK195 rubber gasket
5 – FRK197 rubber gasket
6 – FRK194 rubber gasket
7 – FRK98 rubber gasket
8 – AYPC.C48.0919M-01 drain plug
9 – 50 mm infill unit
10 – AYPC.C48.0611 drip bar
11 – AYPC.W72.0911 seam sealing

Article	Name / Drawing	Weight, kg/m	Exterior perimeter, mm	Cross sectional area, mm²	Code	Profile colour	Bar length, m	Quantity in pack		Weight of a pack	
								pcs	m	net, kg	gross, kg
AYPC.W72.0101E	Frame profile 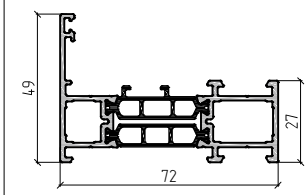	1.29	358	584.3	10960100 10960121 10960124 10960130 10960131 109601808	00 RAL9016 RAL8014 RAL8017 RAL9006 A00–D6	6.5	4	26	33.5 34.7 34.7 34.7 34.7 33.5	34.3 35.4 35.4 35.4 35.4 34.3
AYPC.W72.0102E	Frame profile 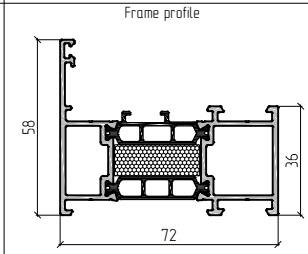	1.47	376	648.4	10960221 10960224 10960230 10960231 109602808	RAL9016 RAL8014 RAL8017 RAL9006 A00–D6	6.5	4	26	39.4 39.4 39.4 39.4 38.2	40.3 40.3 40.3 40.3 39.1
AYPC.W72.0102NE	Frame profile 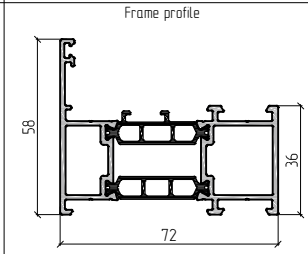	1.46	376	648.4	10963000 10963021 10963024 10963030 10963031 109630808	00 RAL9016 RAL8014 RAL8017 RAL9006 A00–D6	6.5	4	26	38.0 39.1 39.1 39.1 39.1 38.0	38.8 40.0 40.0 40.0 40.0 38.8
AYPC.W72.0103E	Frame profile 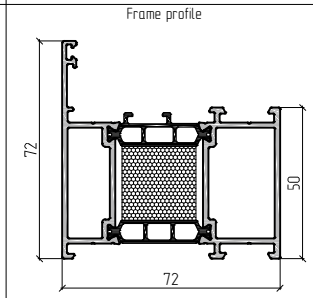	1.81	404	767.3	10961021 10961024 10961030 10961031 109610808	RAL9016 RAL8014 RAL8017 RAL9006 A00–D6	6.5	4	26	48.3 48.3 48.3 48.3 47.1	49.3 49.3 49.3 49.3 48.0
AYPC.W72.0103E	Frame profile 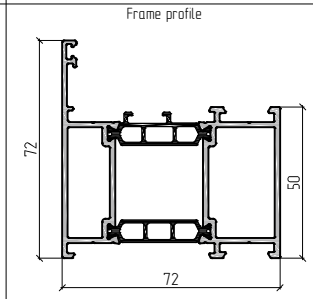	1.79	404	767.3	10963300 10963321 10963324 10963330 10963331 109633808	00 RAL9016 RAL8014 RAL8017 RAL9006 A00–D6	6.5	4	26	46.5 47.8 47.8 47.8 47.8 46.5	47.5 48.7 48.7 48.7 48.7 47.5
AYPC.W72.0106E	Frame profile 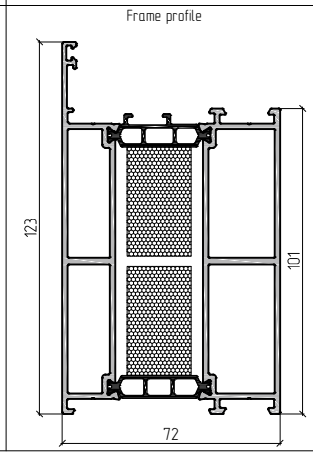	3.04	506	1219.6	10961221 10961224 10961230 10961231 109612808	RAL9016 RAL8014 RAL8017 RAL9006 A00–D6	6.5	2	13	40.3 40.3 40.3 40.3 39.5	41.2 41.2 41.2 41.2 40.4

Article	Name / Drawing	Weight, kg/m	Exterior perimeter, mm	Cross sectional area, mm²	Code	Profile colour	Bar length, m	Quantity in pack		Weight of a pack	
								pcs	m	net, kg	gross, kg
AYPC.W72.0106NE	Frame profile 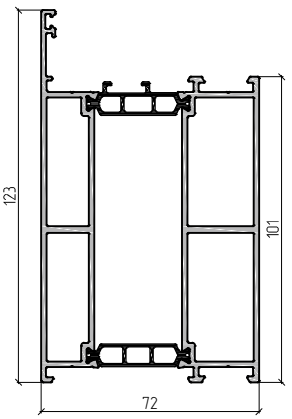	3.00	506	1219.6	10964900 10964921 10964924 10964930 10964931 109649808	00 RAL9016 RAL8014 RAL8017 RAL9006 A00–D6	6.5	2	13	39.0 39.8 39.8 39.8 39.8 39.0	39.9 40.7 40.7 40.7 40.7 39.9
AYPC.W72.0107E	Frame profile 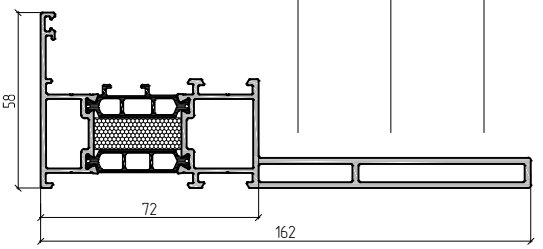	2.50	549	1031.6	10961321 10961324 10961330 10961331 109613808	RAL9016 RAL8014 RAL8017 RAL9006 A00–D6	6.5	2	13	33.4 33.4 33.4 33.4 32.5	34.2 34.2 34.2 34.2 33.3
AYPC.W72.0107NE	Frame profile 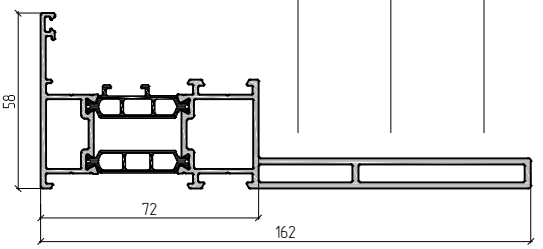	2.49	549	1031.6	10916100 10916121 10916124 10916130 10916131 109161808	00 RAL9016 RAL8014 RAL8017 RAL9006 A00–D6	6.5	2	13	32.4 33.2 33.2 33.2 33.2 32.4	33.2 34.0 34.0 34.0 34.0 33.2
AYPC.W72.0815E	Frame profile 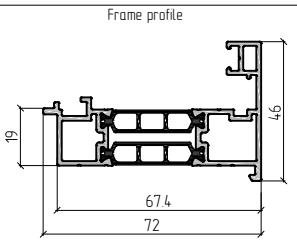	1.23	319	558.1	10965600 10965621 10965624 10965630 10965631 109656808	00 RAL9016 RAL8014 RAL8017 RAL9006 A00–D6	6.5	4	26	31.9 32.8 32.8 32.8 32.8 31.9	32.5 33.5 33.5 33.5 33.5 32.5
AYPC.W72.0121E	Widener profile 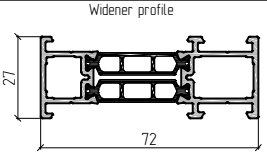	1.16	278	521.0	10965300 10965321 10965324 10965330 10965331 109653808	00 RAL9016 RAL8014 RAL8017 RAL9006 A00–D6	6.5	4	26	30.2 31.0 31.0 31.0 31.0 30.2	32.1 33.1 33.1 33.1 33.1 32.1
AYPC.W72.0122E	Widener profile 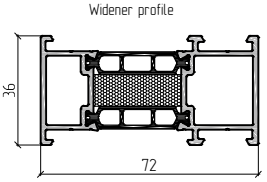	1.34	296	581.1	10965421 10965424 10965430 10965431 109654808	RAL9016 RAL8014 RAL8017 RAL9006 A00–D6	6.5	4	26	35.8 35.8 35.8 35.8 34.8	36.6 36.6 36.6 36.6 35.7
AYPC.W72.0122NE	Widener profile 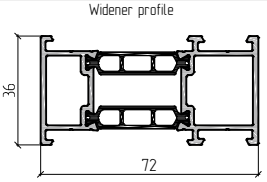	1.33	296	581.1	10966900 10966921 10966924 10966930 10966931 109669808	00 RAL9016 RAL8014 RAL8017 RAL9006 A00–D6	6.5	4	26	34.6 35.5 35.5 35.5 35.5 34.6	35.4 36.3 36.3 36.3 36.3 35.4

Article	Name / Drawing	Weight, kg/m	Exterior perimeter, mm	Cross sectional area, mm^2	Code	Profile colour	Bar length, m	Quantity in pack		Weight of a pack	
								pcs	m	net, kg	gross, kg
AYPC.W72.0123E	Widener profile 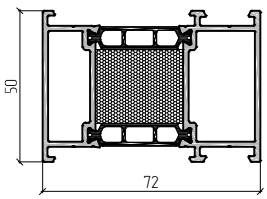	1.67	324	704.0	10965521 10965524 10965530 10965531 109655808	RAL9016 RAL8014 RAL8017 RAL9006 A00-D6	6.5	4	26	44.4 44.4 44.4 44.4 43.4	45.5 45.5 45.5 45.5 44.5
AYPC.W72.0123NE	Widener profile 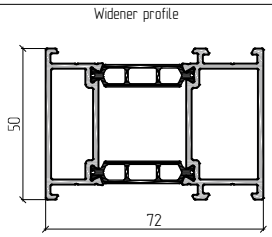	1.65	324	704.0	10967000 10967021 10967024 10967030 10967031 109670808	00 RAL9016 RAL8014 RAL8017 RAL9006 A00-D6	6.5	2	13	21.5 22.0 22.0 22.0 22.0 21.5	22.1 22.6 22.6 22.6 22.6 22.1
AYPC.W72.0201E	Sash profile 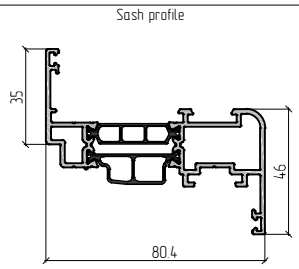	1.49	424	653.9	10960400 10960421 10960424 10960430 10960431 109604808	00 RAL9016 RAL8014 RAL8017 RAL9006 A00-D6	6.5	4	26	38.7 40.4 40.4 40.4 40.4 38.7	39.6 41.2 41.2 41.2 41.2 39.6
AYPC.W72.0202E	Sash profile 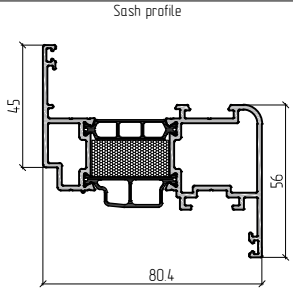	1.77	444	744.5	10960521 10960524 10960530 10960531 109605808	RAL9016 RAL8014 RAL8017 RAL9006 A00-D6	6.5	4	26	47.4 47.4 47.4 47.4 46.0	48.3 48.3 48.3 48.3 46.9
AYPC.W72.0202NE	Sash profile 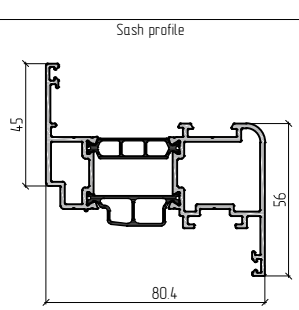	1.76	444	744.5	10963100 10963121 10963124 10963130 10963131 109631808	00 RAL9016 RAL8014 RAL8017 RAL9006 A00-D6	6.5	4	26	45.8 47.2 47.2 47.2 47.2 45.8	46.7 48.1 48.1 48.1 48.1 46.7
AYPC.W72.0203E	Sash profile 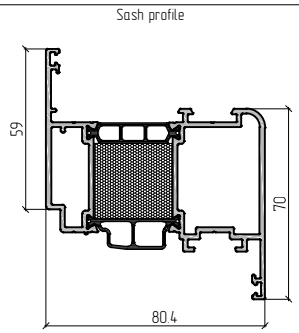	2.13	487	876.8	10961421 10961424 10961430 10961431 109614808	RAL9016 RAL8014 RAL8017 RAL9006 A00-D6	6.5	4	26	56.9 56.9 56.9 56.9 55.4	57.9 57.9 57.9 57.9 56.4

Article	Name / Drawing	Weight, kg/m	Exterior perimeter, mm	Cross sectional area, mm^2	Code	Profile colour	Bar length, m	Quantity in pack		Weight of a pack	
								pcs	m	net, kg	gross, kg
AYPC.W72.0203NE	Sash profile 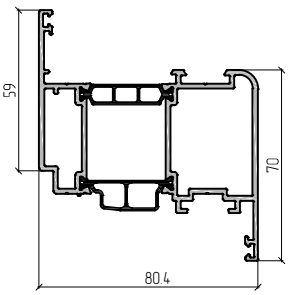	2.11	487	876.8	10963400 10963421 10963424 10963430 10963431 109634808	00 RAL9016 RAL8014 RAL8017 RAL9006 A00–D6	6.5	4	26	54.9 56.4 56.4 56.4 56.4 54.9	55.9 57.4 57.4 57.4 57.4 55.9
AYPC.W72.0212E	Sash profile 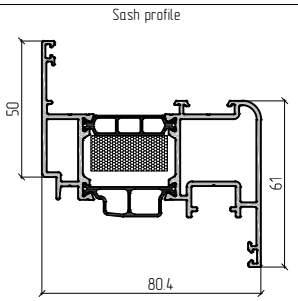	1.86	475	770.5	10968221 10968224 10968230 10968231 109682808	RAL9016 RAL8014 RAL8017 RAL9006 A00–D6	6.5	2	13	24.9 24.9 24.9 24.9 24.2	25.8 25.8 25.8 25.8 25.0
AYPC.W72.0212NE	Sash profile 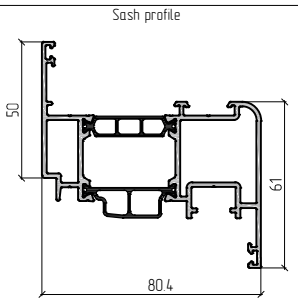	1.85	475	770.5	10968300 10968321 10968324 10968330 10968331 109683808	00 RAL9016 RAL8014 RAL8017 RAL9006 A00–D6	6.5	2	13	24.0 25.0 25.0 25.0 25.0 24.0	24.5 25.5 25.5 25.5 25.5 24.5
AYPC.W72.0221E	Sash profile 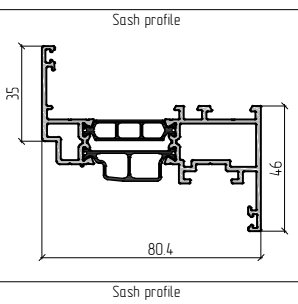	1.5	444.1	735.8	10968800 10968821 10968824 10968830 10968831 109688808	00 RAL9016 RAL8014 RAL8017 RAL9006 A00–D6	6.5	4	26	39.0 39.7 39.7 39.7 39.7 39.0	39.8 40.5 40.5 40.5 40.5 39.8
AYPC.W72.0222E	Sash profile 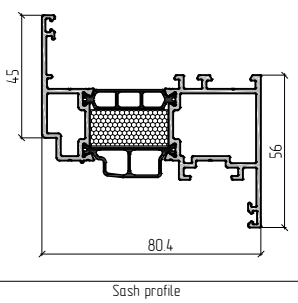	1.8	457.2	835.1	10968921 10968924 10968930 10968931 109689808	RAL9016 RAL8014 RAL8017 RAL9006 A00–D6	6.5	2	13	23.7 23.7 23.7 23.7 23.0	24.6 24.6 24.6 24.6 23.8
AYPC.W72.0222NE	Sash profile 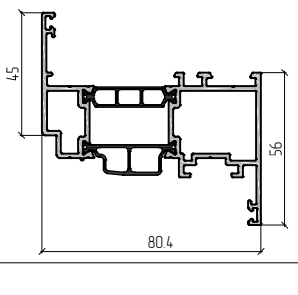	1.8	457.2	835.1	10969300 10969321 10969324 10969330 10969331 109693808	00 RAL9016 RAL8014 RAL8017 RAL9006 A00–D6	6.5	2	13	22.9 23.6 23.6 23.6 23.6 22.9	23.7 24.4 24.4 24.4 24.4 23.7

Article	Name / Drawing	Weight, kg/m	Exterior perimeter, mm	Cross sectional area, mm^2	Code	Profile colour	Bar length, m	Quantity in pack		Weight of a pack	
								pcs	m	net, kg	gross, kg
AYPC.W72.0223E	Sash profile 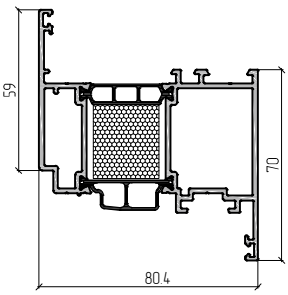	2.1	483.9	868.6	10969021 10969024 10969030 10969031 109690808	RAL9016 RAL8014 RAL8017 RAL9006 A00-D6	6.5	2	13	28.4 28.4 28.4 28.4 27.7	29.4 29.4 29.4 29.4 28.6
AYPC.W72.0223NE	Sash profile 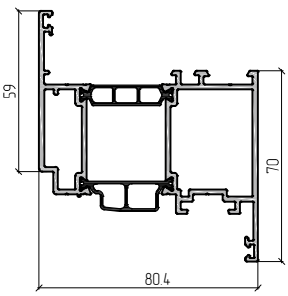	2.1	483.9	868.6	10969800 10969821 10969824 10969830 10969831 109698808	00 RAL9016 RAL8014 RAL8017 RAL9006 A00-D6	6.5	2	13	27.5 28.3 28.3 28.3 28.3 27.5	28.3 29.1 29.1 29.1 29.1 28.3
AYPC.W72.0301E	Transom bar profile 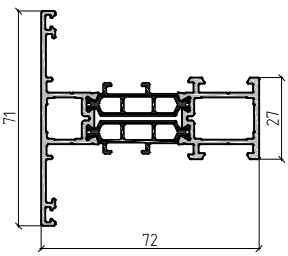	1.44	443	647.7	10960700 10960721 10960724 10960730 10960731 109607808	00 RAL9016 RAL8014 RAL8017 RAL9006 A00-D6	6.5	4	26	37.5 39.2 39.2 39.2 39.2 37.5	38.4 40.1 40.1 40.1 40.1 38.4
AYPC.W72.0302E	Transom bar profile 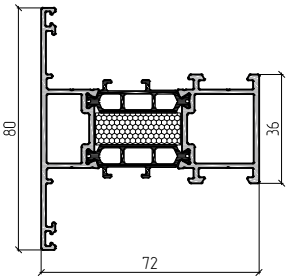	1.63	460	711.9	10960821 10960824 10960830 10960831 109608808	RAL9016 RAL8014 RAL8017 RAL9006 A00-D6	6.5	4	26	43.8 43.8 43.8 43.8 42.4	44.8 44.8 44.8 44.8 43.3
AYPC.W72.0302NE	Transom bar profile 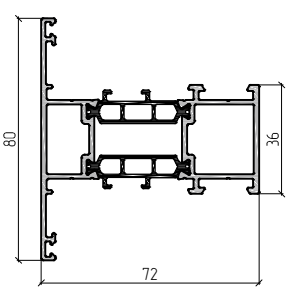	1.62	460	711.9	10963200 10963221 10963224 10963230 10963231 109632808	00 RAL9016 RAL8014 RAL8017 RAL9006 A00-D6	6.5	4	26	42.0 43.2 43.2 43.2 43.2 42.0	43.0 44.3 44.3 44.3 44.3 43.0

Article	Name / Drawing	Weight, kg/m	Exterior perimeter, mm	Cross sectional area, mm^2	Code	Profile colour	Bar length, m	Quantity in pack		Weight of a pack	
								pcs	m	net, kg	gross, kg
AYPC.W72.0303E	Transom bar profile 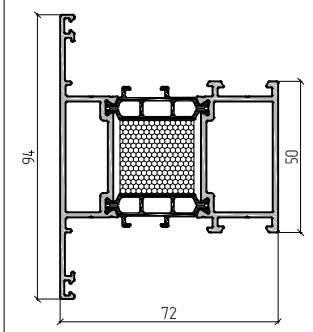	1.96	487	830.7	10961621 10961624 10961630 10961631 109616808	RAL9016 RAL8014 RAL8017 RAL9006 A00-D6	6.5	4	26	52.5 52.5 52.5 52.5 51.0	53.5 53.5 53.5 53.5 52.0
AYPC.W72.0303NE	Transom bar profile 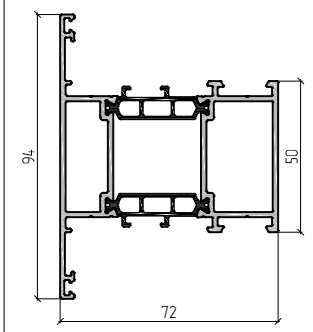	1.94	487	830.7	10963500 10963521 10963524 10963530 10963531 109635808	00 RAL9016 RAL8014 RAL8017 RAL9006 A00-D6	6.5	4	26	50.4 51.9 51.9 51.9 51.9 50.4	51.4 52.9 52.9 52.9 52.9 51.4
AYPC.W72.0304E	Transom bar profile 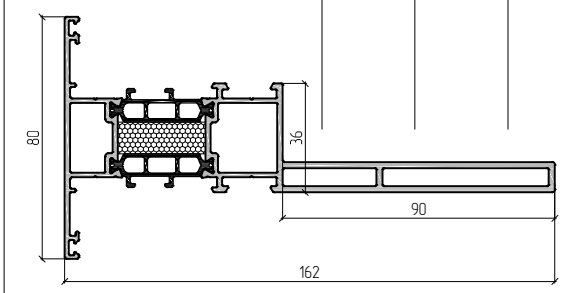	2.66	638	1095.1	10961721 10961724 10961730 10961731 109617808	RAL9016 RAL8014 RAL8017 RAL9006 A00-D6	6.5	2	13	35.6 35.6 35.6 35.6 34.6	36.4 36.4 36.4 36.4 35.4
AYPC.W72.0304NE	Transom bar profile 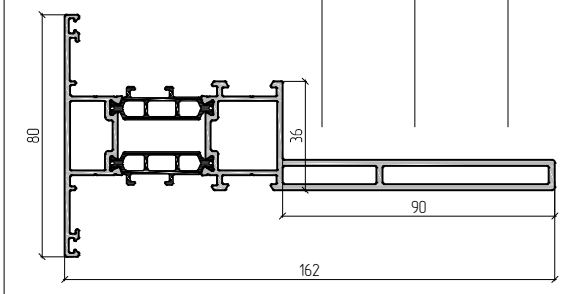	2.65	638	1095.1	10966500 10966521 10966524 10966530 10966531 109665808	00 RAL9016 RAL8014 RAL8017 RAL9006 A00-D6	6.5	2	13	34.5 35.7 35.7 35.7 35.7 34.5	35.3 36.5 36.5 36.5 36.5 35.3
AYPC.W72.0305E	Transom bar profile 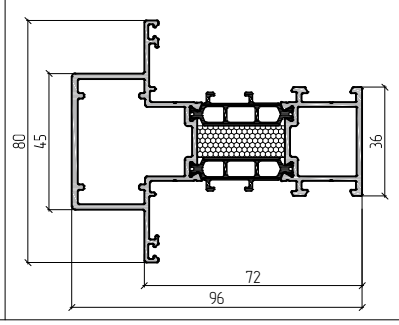	2.00	505	851.6	10961821 10961824 10961830 10961831 109618808	RAL9016 RAL8014 RAL8017 RAL9006 A00-D6	6.5	4	26	53.6 53.6 53.6 53.6 52.0	54.9 54.9 54.9 54.9 52.9

ALUTECH PROFILE SYSTEMS

Article	Name / Drawing	Weight, kg/m	Exterior perimeter, mm	Cross sectional area, mm²	Code	Profile colour	Bar length, m	Quantity in pack		Weight of a pack	
								pcs	m	net, kg	gross, kg
AYPC.W72.0305NE	Transom bar profile 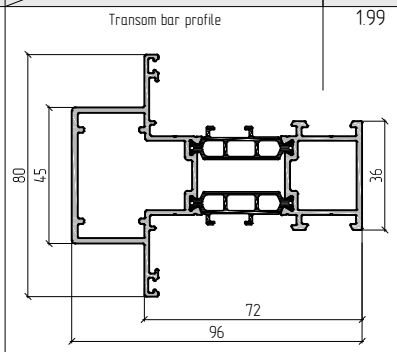	1.99	505	851.6	10964300 10964321 10964324 10964330 10964331 109643808	00 RAL9016 RAL8014 RAL8017 RAL9006 A00–D6	6.5	2	13	25.9 26.7 26.7 26.7 26.7 25.9	26.6 27.4 27.4 27.4 27.4 26.6
AYPC.W72.0308E	Transom bar profile 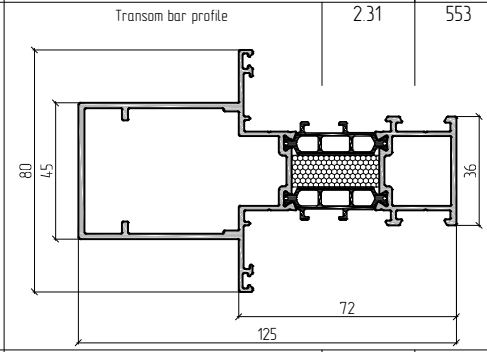	2.31	553	970.5	10965921 10965924 10965930 10965931 109659808	RAL9016 RAL8014 RAL8017 RAL9006 A00–D6	6.5	2	13	30.9 30.9 30.9 30.9 30.0	31.8 31.8 31.8 31.8 31.0
AYPC.W72.0308NE	Transom bar profile 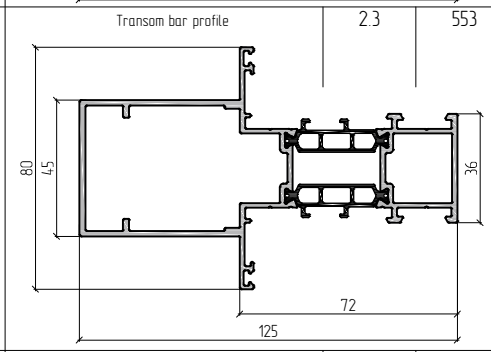	2.3	553	970.5	10967400 10967421 10967424 10967430 10967431 109674808	00 RAL9016 RAL8014 RAL8017 RAL9006 A00–D6	6.5	2	13	29.9 30.8 30.8 30.8 30.8 29.9	30.7 31.5 31.5 31.5 31.5 30.7
AYPC.W72.0321E	Transom bar profile 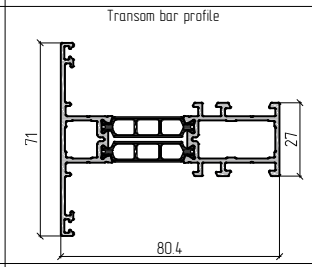	1.53	449.8	653.0	10969100 10969121 10969124 10969130 10969131 109691808	00 RAL9016 RAL8014 RAL8017 RAL9006 A00–D6	6.5	4	26	39.8 40.7 40.7 40.7 40.7 39.8	40.7 41.6 41.6 41.6 41.6 40.7
AYPC.W72.0504E	Double casement profile 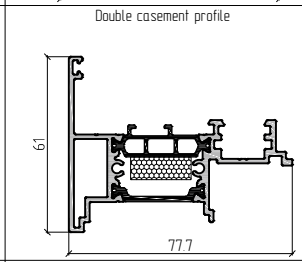	1.45	411	625.1	10927521 10927524 10927530 10927531 109275808	RAL9016 RAL8014 RAL8017 RAL9006 A00–D6	6.5	4	26	39.0 39.0 39.0 39.0 37.7	39.8 39.8 39.8 39.8 38.5
AYPC.W72.0504NE	Double casement profile 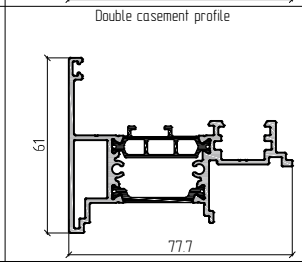	1.44	411	625.1	10934500 10934521 10934524 10934530 10934531 109345808	00 RAL9016 RAL8014 RAL8017 RAL9006 A00–D6	6.5	4	26	37.4 38.9 38.9 38.9 38.9 37.4	38.2 39.7 39.7 39.7 39.7 38.2

Article	Name / Drawing	Weight, kg/m	Exterior perimeter, mm	Cross sectional area, mm^2	Code	Profile colour	Bar length, m	Quantity in pack		Weight of a pack	
								pcs	m	net, kg	gross, kg
AYPC.W72.0803E	Auxiliary door profile 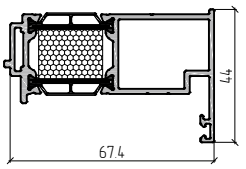	1.27	279	533.4	10962221 10962224 10962230 10962231 109622808	RAL9016 RAL8014 RAL8017 RAL9006 A00-D6	6.5	4	26	33.9 33.9 33.9 33.9 33.0	34.6 34.6 34.6 34.6 33.8
AYPC.W72.0803NE	Auxiliary door profile 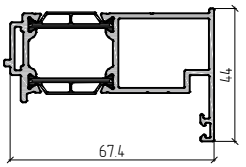	1.25	279	533.4	10966600 10966621 10966624 10966630 10966631 109666808	00 RAL9016 RAL8014 RAL8017 RAL9006 A00-D6	6.50	4	26	32.5 33.3 33.3 33.3 33.3 32.5	33.2 34.1 34.1 34.1 34.1 33.2
AYPC.W72.0804E	Connecting profile 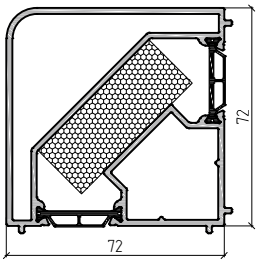	2.39	320	950.4	10962321 10962324 10962330 10962331 109623808	RAL9016 RAL8014 RAL8017 RAL9006 A00-D6	6.50	2	13	31.6 31.6 31.6 31.6 31.1	32.3 32.3 32.3 32.3 31.8
AYPC.W72.0804NE	Connecting profile 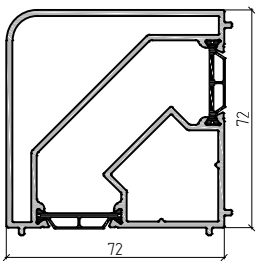	2.37	320	950.4	10965700 10965721 10965724 10965730 10965731 109657808	00 RAL9016 RAL8014 RAL8017 RAL9006 A00-D6	6.50	2	13	30.8 31.4 31.4 31.4 31.4 30.8	31.5 32.1 32.1 32.1 32.1 31.5
AYPC.W72.0805E	Connecting profile 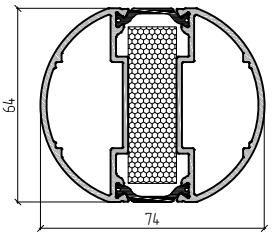	1.93	231	767.4	10962421 10962424 10962430 10962431 109624808	RAL9016 RAL8014 RAL8017 RAL9006 A00-D6	6.50	2	13	25.5 25.5 25.5 25.5 25.1	26.0 26.0 26.0 26.0 25.7
AYPC.W72.0805NE	Connecting profile 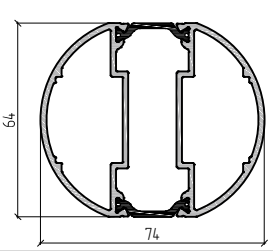	1.91	231	767.4	10967500 10967521 10967524 10967530 10967531 109675808	00 RAL9016 RAL8014 RAL8017 RAL9006 A00-D6	6.5	2	13	25.0 25.4 25.4 25.4 25.4 25.0	25.6 25.9 25.9 25.9 25.9 25.6

Article	Name / Drawing	Weight, kg/m	Exterior perimeter, mm	Cross sectional area, mm²	Code	Profile colour	Bar length, m	Quantity in pack		Weight of a pack	
								pcs	m	net, kg	gross, kg
AYPC.W72.0840E	Connecting profile 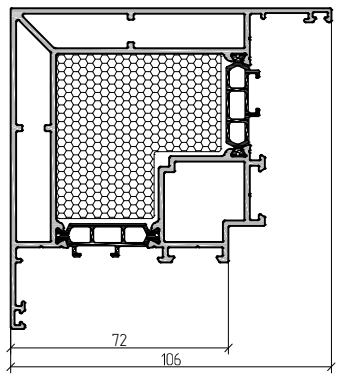	3.17	583	1242.4	10932121 10932124 10932130 10932131 109321808	RAL9016 RAL8014 RAL8017 RAL9006 A00–D6	6.5	1	6.5	21.8 21.8 21.8 21.8 20.6	22.2 22.2 22.2 22.2 21.0
			Attention! Non-standard delivery time!								
AYPC.W72.0840NE	Connecting profile 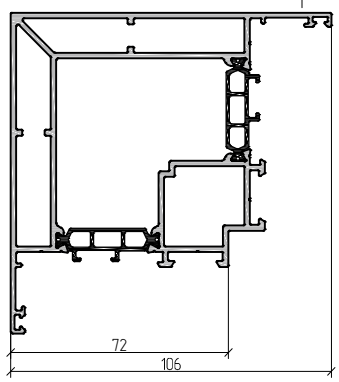	3.09	583	1242.4	10931800 10931821 10931824 10931830 10931831 109318808	00 RAL9016 RAL8014 RAL8017 RAL9006 A00–D6	6.5	1	6.5	20.1 20.9 20.9 20.9 20.9 20.1	20.5 21.3 21.3 21.3 21.3 20.5
			Attention! Non-standard delivery time!								
AYPC.W72.0841E	Connecting profile 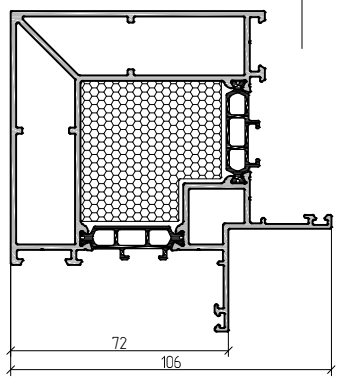	3.04	583	1204.8	10932500 10932521 10932524 10932530 10932531 109325808	00 RAL9016 RAL8014 RAL8017 RAL9006 A00–D6	6.5	1	6.5	21.0 21.0 21.0 21.0 19.8	21.4 21.4 21.4 21.4 20.2
			Attention! Non-standard delivery time!								
AYPC.W72.0841NE	Connecting profile 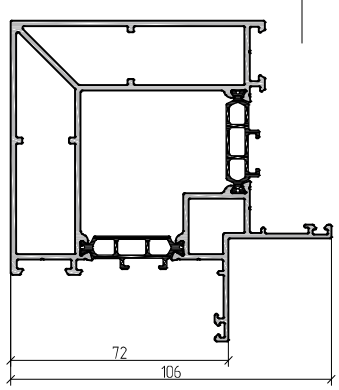	2.98	583	1204.8	10932400 10932421 10932424 10932430 10932431 109324808	00 RAL9016 RAL8014 RAL8017 RAL9006 A00–D6	6.5	1	6.5	19.3 20.1 20.1 20.1 20.1 19.3	19.7 20.5 20.5 20.5 20.5 19.7
			Attention! Non-standard delivery time!								

Article	Name / Drawing	Weight, kg/m	Exterior perimeter, mm	Cross sectional area, mm^2	Code	Profile colour	Bar length, m	Quantity in pack		Weight of a pack	
								pcs	m	net, kg	gross, kg
AYPC.W62.0602	Glass bead profile 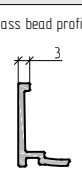	0.17	75.1	63.1	10804500 10804521 10804524 10804530 10804531 108045808	00 RAL9016 RAL8014 RAL8017 RAL9006 A00–D6	6.5	12	78	13.3 14.0 14.0 14.0 14.0 13.3	13.6 14.3 14.3 14.3 14.3 13.6
AYPC.W62.0603	Glass bead profile 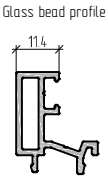	0.37	133.2	137.8	10804600 10804621 10804624 10804630 10804631 108046808	00 RAL9016 RAL8014 RAL8017 RAL9006 A00–D6	6.5	12	78	29.0 30.3 30.3 30.3 30.3 29.0	29.5 30.8 30.8 30.8 30.8 29.5
AYPC.W62.0604	Glass bead profile	0.10	50.8	38.6	10804700 108047806	00 A00–E6	6.5	8	52	5.4	5.5
AYPC.W62.0701	Transom bar fastening profile 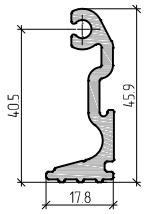	0.69	161	253.8	10801000	00	3.3	12	39	26.8	27.1
AYPC.W62.0705	Transom bar fastening profile 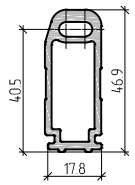	0.85	133	316.0	10867800	00	3.3	6	19.5	16.6	16.9
AYPC.W62.0804	Thermal compensation profile 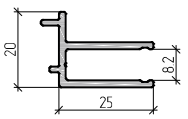	0.36	152	131.4	10802000 10802021 10802024 10802030 10802031 108020808	00 RAL9016 RAL8014 RAL8017 RAL9006 A00–D6	6.5	12	78	27.7 29.5 29.5 29.5 29.5 27.7	28.5 29.9 29.9 29.9 29.9 28.5
AYPC.W62.0808	Rotary clip profile 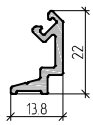	0.22	87	82.6	10802400 10802421 10802424 10802430 10802431 108024808	00 RAL9016 RAL8014 RAL8017 RAL9006 A00–D6	6.5	12	78	17.4 18.4 18.4 18.4 18.4 17.4	18.2 18.7 18.7 18.7 18.7 18.2
AYPC.W62.0809	Rotary clip profile 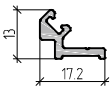	0.17	75	62.2	10802500 10802521 10802524 10802530 10802531 108025808	00 RAL9016 RAL8014 RAL8017 RAL9006 A00–D6	6.5	12	78	13.1 14.0 14.0 14.0 14.0 13.1	13.9 14.2 14.2 14.2 14.2 13.9
AYPC.SL160.0702	Reinforcement profile 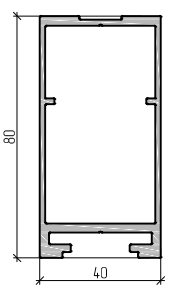	1.57	500.4	583.0	12602000 12602021 12602024 12602030 12602031 126020808	00 RAL9016 RAL8014 RAL8017 RAL9006 A00–D6	6.5	2	13	20.5 21.3 21.3 21.3 21.3 20.5	20.9 21.7 21.7 21.7 21.7 20.9

Article	Name / Drawing	Weight, kg/m	Exterior perimeter, mm	Cross sectional area, mm^2	Code	Profile colour	Bar length, m	Quantity in pack		Weight of a pack	
								pcs	m	net, kg	gross, kg
AYPC.C48.0614	Leveling profile 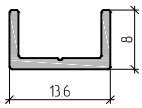	0.097	55.4	35.8	10402700 104027806	00 A00-E6	6.5	8	52	5.0	5.1
AYPC.C48.0615	Flange profile 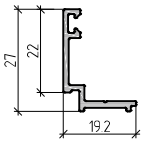	0.210	108.5	77.6	10402800 10402821 10402824 10402830 10402831 104028808	00 RAL9016 RAL8014 RAL8017 RAL9006 A00-D6	6.5	12	78	16.4 17.7 17.7 17.7 17.7	16.8 18.1 18.1 18.1 18.1
AYPC.C48.0601	Glass bead profile 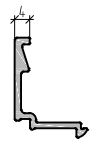	0.220	95.3	82.1	10408100 10408121 10408124 10408130 10408131 104081808	00 RAL9016 RAL8014 RAL8017 RAL9006 A00-D6	6.5	18	117	25.9 29.2 29.2 29.2 29.2 25.9	26.4 29.7 29.7 29.7 29.7 26.4
AYPC.C48.0602	Glass bead profile 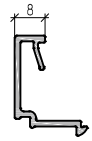	0.230	117.0	85.1	10405800 10405821 10405824 10405830 10405831 104058808	00 RAL9016 RAL8014 RAL8017 RAL9006 A00-D6	6.5	18	117	26.9 30.2 30.2 30.2 30.2 26.9	27.4 30.7 30.7 30.7 30.7 27.4
AYPC.C48.0603	Glass bead profile 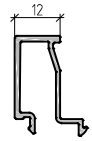	0.251	144.9	93.3	10401700 10401721 10401724 10401730 10401731 104017808	00 RAL9016 RAL8014 RAL8017 RAL9006 A00-D6	6.5	18	117	29.4 31.3 31.3 31.3 31.3 29.4	29.9 31.8 31.8 31.8 31.8 29.9
AYPC.C48.0604	Glass bead profile 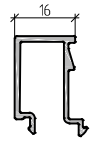	0.278	149.5	103.1	10401800 10401821 10401824 10401830 10401831 104018808	00 RAL9016 RAL8014 RAL8017 RAL9006 A00-D6	6.5	18	117	32.5 34.4 34.4 34.4 34.4 32.5	33.2 35.1 35.1 35.1 35.1 33.2
AYPC.C48.0605	Glass bead profile 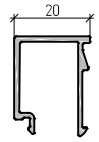	0.279	150.8	103.4	10401900 10401921 10401924 10401930 10401931 104019808	00 RAL9016 RAL8014 RAL8017 RAL9006 A00-D6	6.5	18	117	32.6 34.2 34.2 34.2 34.2 32.6	33.3 34.9 34.9 34.9 34.9 33.3
AYPC.C48.0606	Glass bead profile 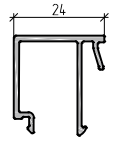	0.307	172.2	113.4	10405400 10405421 10405424 10405430 10405431 104054808	00 RAL9016 RAL8014 RAL8017 RAL9006 A00-D6	6.5	18	117	35.9 37.8 37.8 37.8 37.8 35.9	36.7 38.1 38.1 38.1 38.1 36.7
AYPC.C48.0607	Glass bead profile 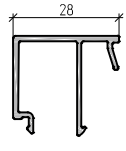	0.322	180.2	119.4	10402000 10402021 10402024 10402030 10402031 104020808	00 RAL9016 RAL8014 RAL8017 RAL9006 A00-D6	6.5	18	117	37.7 39.9 39.9 39.9 39.9 37.9	38.4 40.6 40.6 40.6 40.6 38.4

Article	Name / Drawing	Weight, kg/m	Exterior perimeter, mm	Cross sectional area, mm^2	Code	Profile colour	Bar length, m	Quantity in pack		Weight of a pack	
								pcs	m	net, kg	gross, kg
AYPC.C48.0608	Glass bead profile 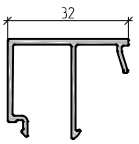	0.339	188.2	125.4	10402100 10402121 10402124 10402130 10402131 104021808	00 RAL9016 RAL8014 RAL8017 RAL9006 A00–D6	6.5	18	117	39.7 41.9 41.9 41.9 41.9 39.7	40.4 42.6 42.6 42.6 42.6 40.4
AYPC.C48.0611	Drip bar 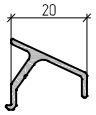	0.184	88.3	68.3	10402400 10402421 10402424 10402430 10402431 104024808	00 RAL9016 RAL8014 RAL8017 RAL9006 A00–D6	6.5	12	78	14.4 15.5 15.5 15.5 15.5 14.4	14.8 15.9 15.9 15.9 15.9 14.8
AYPC.C48.0612	Rod profile 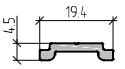	0.136	49.6	50.4	104025806	A00–E6	6.5	24	156	21.2	21.3
AYPC.W62.0607	Rod profile 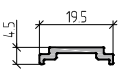	0.110	39.2	52.8	108085806	A00–E6	6.5	24	156	17.2	17.5
AYPC.111.0605	Cover cap profile 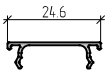	0.088	79.3	33.0	10503000 10503021 10503024 10503030 10503069 105030808	00 RAL9016 RAL8014 RAL8017 RAL9006 A00–D6	6.2	4	24.8	2.2 2.4 2.4 2.4 2.2	2.4 2.6 2.6 2.6 2.4
AYPC.C48.0702	Corner crimping profile 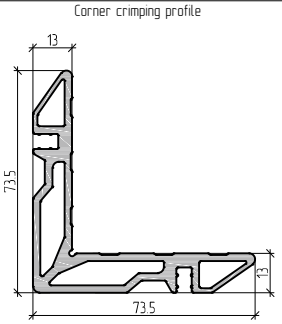	2.103	322.9	776.1	10403600	00	3.3	2.0	6.5	13.6	13.6
AYPC.C48.0704	Corner crimping profile 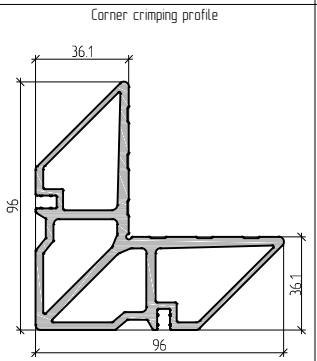	3.816	387.5	1413.6	10403800	00	3.25	2	6.5	24.8	24.8
AYPC.C48.0707	Corner crimping profile 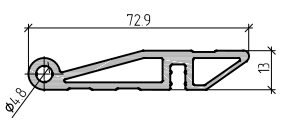	1.070	175.9	396.2	10405600	00	3.25	4	13	13.9	13.9
AYPC.C48.0708	Corner crimping profile 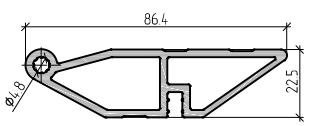	1.384	210.6	512.7	10405700	00	3.25	4	13	17.9	17.9

Article	Name / Drawing	Weight, kg/m	Exterior perimeter, mm	Cross sectional area, mm^2	Code	Profile colour	Bar length, m	Quantity in pack		Weight of a pack	
								pcs	m	net, kg	gross, kg
AYPC.W50.0703	Corner crimping profile 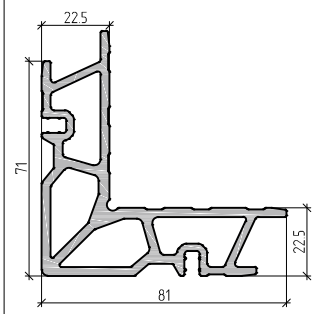	2.982	379.5	1104.1	12402300	00	3.25	2	6.5	19.4	19.5
AYPC.W62.0708	Corner crimping profile 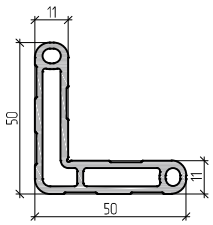	1.23	194	457.1	10870100	00	3.25	5	16.25	20.1	20.5
AYPC.W62.0709	Corner crimping profile 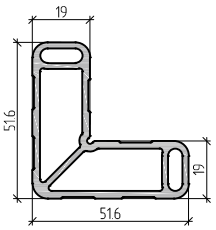	1.43	201	530.6	10870200	00	3.25	4	13.0	18.6	19.0
AYPC.W62.0710	Corner crimping profile 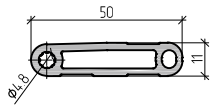	0.74	114	274.9	10870300	00	3.25	10	32.5	24.1	24.6
AYPC.W62.0711	Corner crimping profile 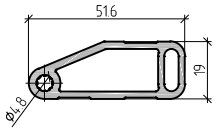	0.87	130	331.9	10870400	00	3.25	8	26.0	22.7	23.2

Image	Code	Article	Weight, kg/m	Application
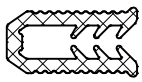	10413200	FRK28	0.106	EPDM rubber gasket. Quantity in pack – 150 m
	10415900	FRK29-01	0.043	EPDM rubber gasket. Quantity in pack – 400 m
	10415500	FRK38	0.092	EPDM rubber gasket. Quantity in pack – 400 m
	11520100	FRK96	0.036	EPDM rubber gasket. Quantity in pack – 300 m
	10821000	FRK98	0.027	EPDM rubber gasket. Quantity in pack – 575 m
	10821100	FRK101	0.001	EPDM rubber gasket. Quantity in pack – 500 m
	10830300	FRK191	0.067	EPDM rubber gasket. Quantity in pack – 125 m
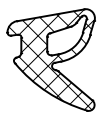	10830500	FRK192	0.097	EPDM rubber gasket. Quantity in pack – 100 m
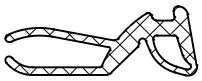	10830700	FRK193	0.105	EPDM rubber gasket. Quantity in pack – 100 m
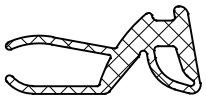	10831200	FRK194	0.135	EPDM rubber gasket. Quantity in pack – 75 m
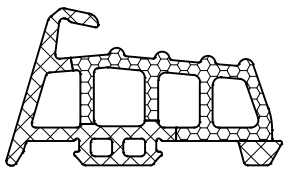	10940300	FRK195	0.313	EPDM rubber gasket. Quantity in pack – 25 m
	10831400	FRK197	0.066	EPDM rubber gasket. Quantity in pack – 150 m
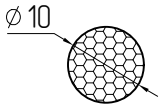	10952300	AYPC.W72.0912	0.031	Sealing rope. Quantity in pack – 45 m
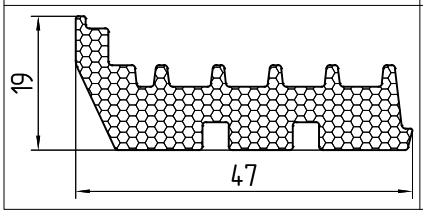	10910900	AYPC.W72.0911	0.011	Seam sealing. Quantity in pack – 180 m

Image	Code	Article	Weight, kg/m	Application
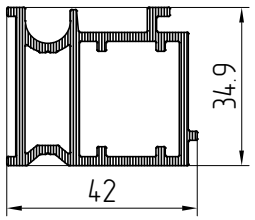	12951300	AYPC.W72.0921	0.486	Universal adapter profile. Quantity in pack – 29 m
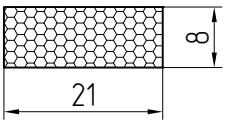	10912500	PE21x8	0.0042	Thermal insulation insert. Quantity in pack – 350 m
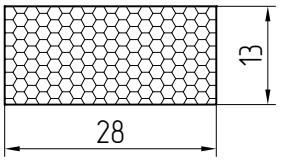	10840200	PE28x13	0.0091	Thermal insulation insert. Quantity in pack – 100 m
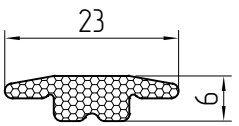	11310800	AYPC.F50.1921	0.003	Seam sealing. Quantity in pack – 400 m

Image	Code	Article	Application
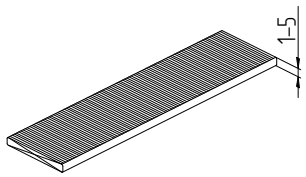	10414600 10414700 10414800 10414900 10415000	100x26x1 100x26x2 100x26x3 100x26x4 100x26x5	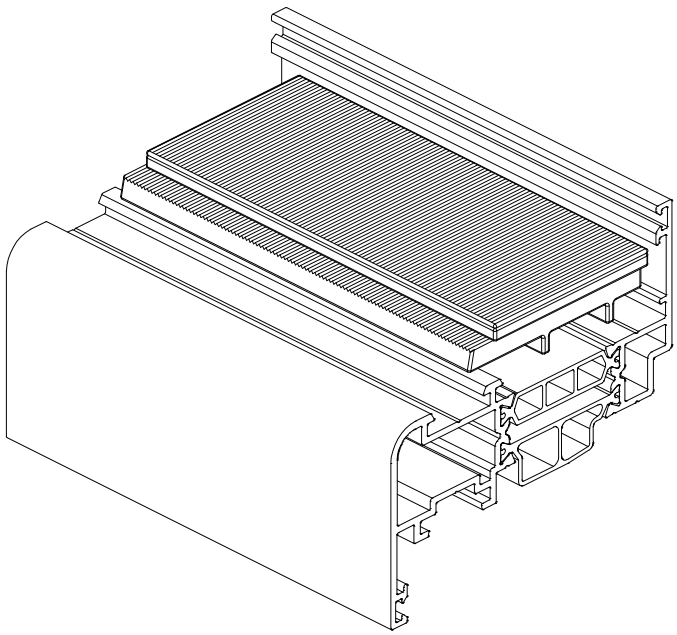 Leveling support. Quantity in pack – 1000 pcs
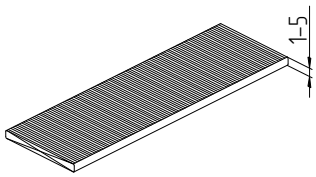	11213400 11213500 11213600 10840300	100x32x1 100x32x2 100x32x3 100x32x5	
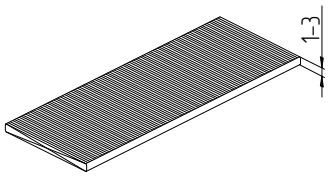	11213700 11213800 11213900	100x38x1 100x38x2 100x38x3	
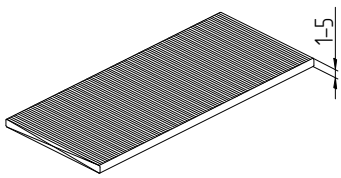	11218100 11218200 11218300 11219800	100x44x1 100x44x2 100x44x3 100x44x5	
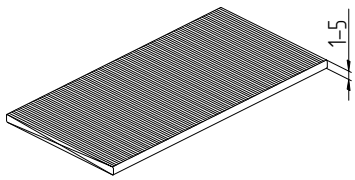	11218400 11218500 11218600 10840500 10840600	100x50x1 100x50x2 100x50x3 100x50x4 100x50x5	
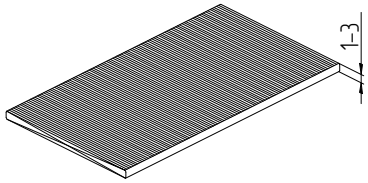	11219100 11219200 11219300	100x56x1 100x56x2 100x56x3	
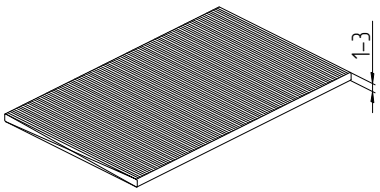	11219400 11219500 11219600	100x62x1 100x62x2 100x62x3	

Image	Code	Article	Application
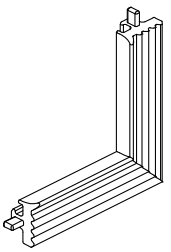	10915200	FRK170	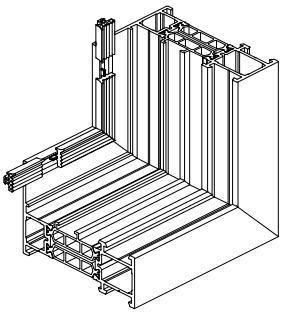 EPDM rubber corner. Quantity in pack – 100 pcs
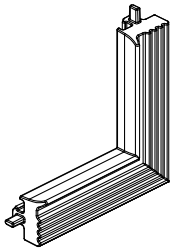	12951400	FRK179	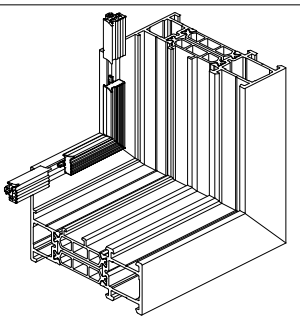 EPDM rubber corner. Quantity in pack – 100 pcs
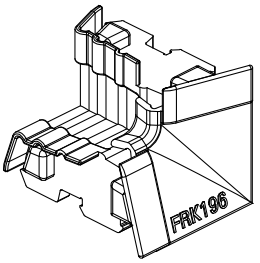	12951500	FRK196	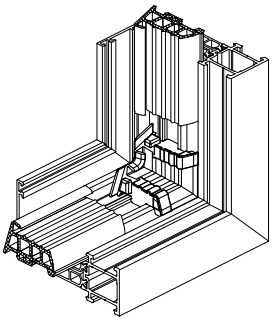 EPDM rubber corner. Quantity in pack – 100 pcs
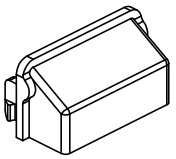	10827400	AYPC.C48.0919M–01 Colour: black	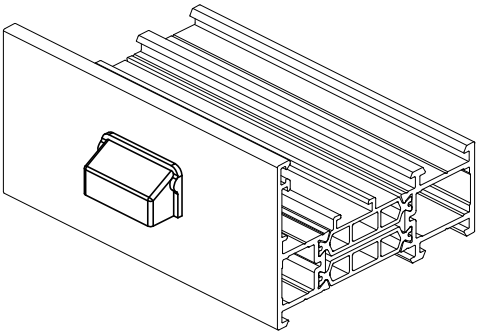 Drain plug. Quantity in pack – 100 pcs
	10827401	AYPC.C48.0919M–01 Colour: white	
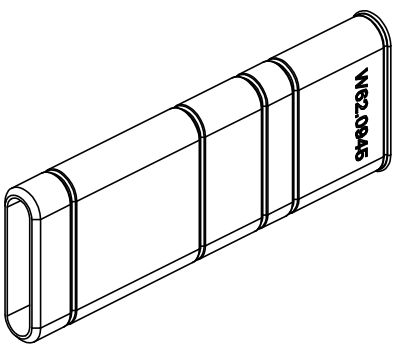	10831500	AYPC.W62.0945	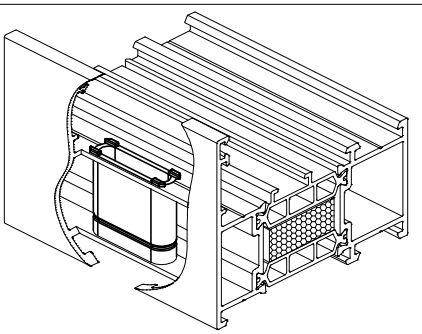 Drain plug. Quantity in pack – 50 pcs

Image	Code	Article	Application
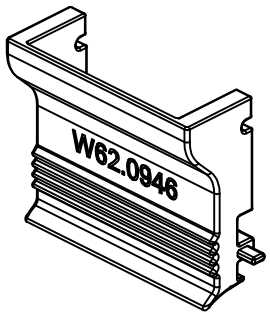	10831700	AYPC.W62.0946	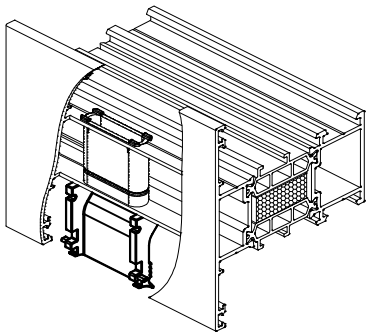 Drain plug. Quantity in pack – 40 pcs
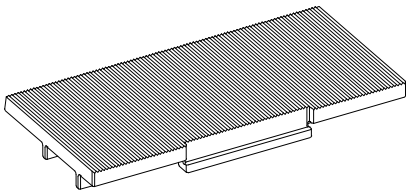	10819200	AYPC.W62.0917	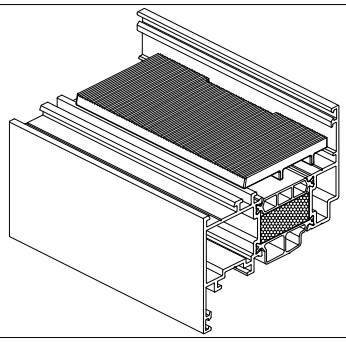 Bearing support. Quantity in pack – 100 pcs
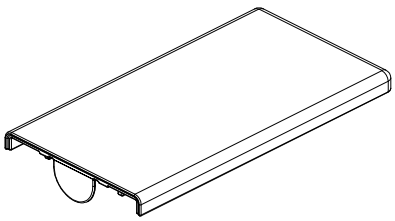	12654700	AYPC.SL160.0925	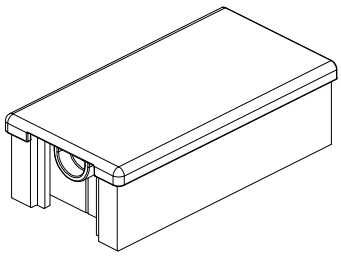 Cover. Quantity in pack – 30 pcs
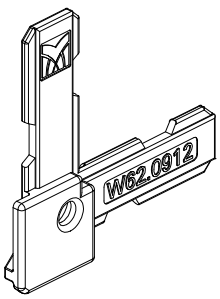	10816900	AYPC.W62.0912	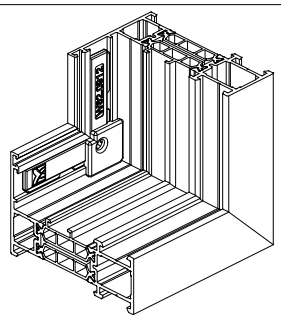 Corner. Quantity in pack – 120 pcs
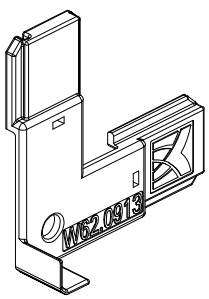	10817000	AYPC.W62.0913	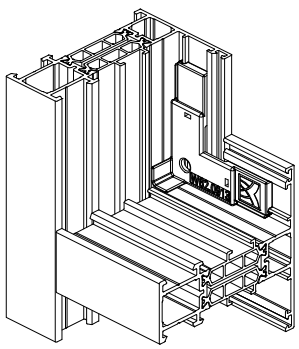 Corner. Quantity in pack – 120 pcs

<table>
<tr><th>Image</th><th>Code</th><th>Article</th><th>Application</th></tr>
<tr><td> 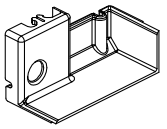 </td><td rowspan="2">10819000</td><td rowspan="2">AYPC.W62.0914</td><td rowspan="2"> 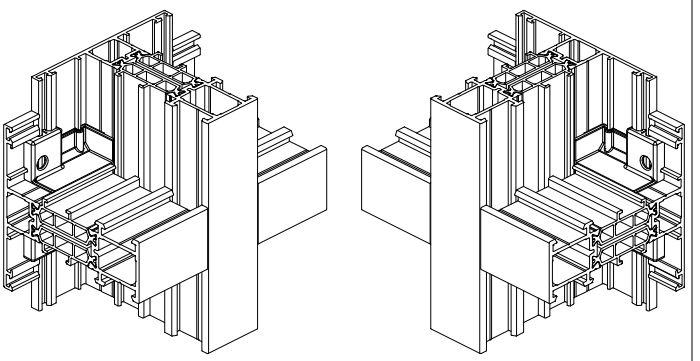 </td></tr>
<tr><td> 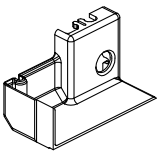 </td></tr>
<tr><td></td><td></td><td></td><td>Corner plug kit. Quantity in pack – 120 kits</td></tr>
<tr><td> 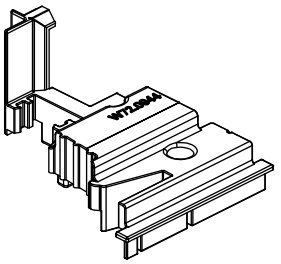 </td><td>12951600</td><td>AYPC.W72.0944</td><td> 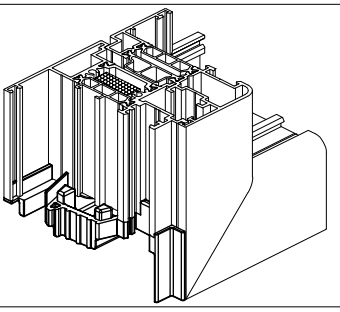 </td></tr>
<tr><td> 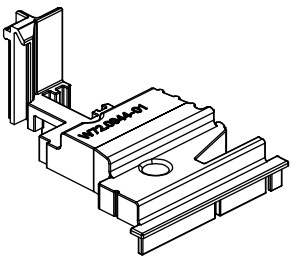 </td><td>12952900</td><td>AYPC.W72.0944-01</td><td> 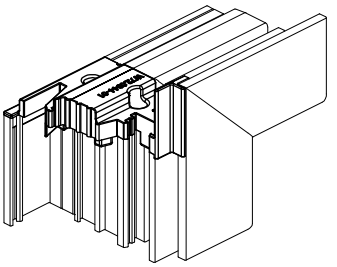 </td></tr>
<tr><td></td><td></td><td></td><td>Double casement profile plug. Quantity in pack – 50 pcs</td></tr>
<tr><td> 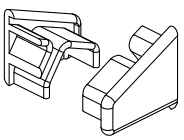 </td><td>10815500</td><td>AYPC.W62.0999
Colour: black</td><td rowspan="3">Drain profile plug kit. Quantity in pack – 50 kits
 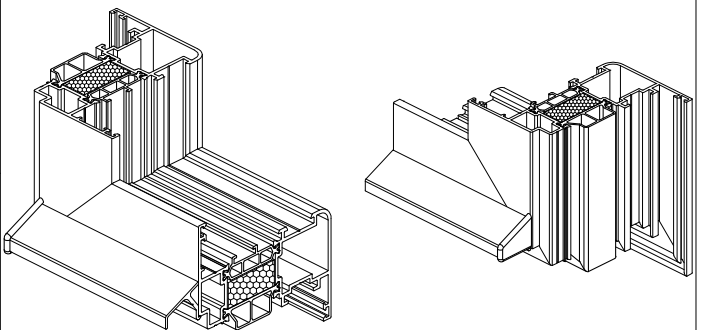
For drain profile
AYPC.C48.0611</td></tr>
<tr><td> 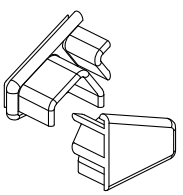 </td><td>10815501</td><td>AYPC.W62.0999
Colour: white</td></tr>
<tr><td></td><td></td><td></td></tr>
</table>

Image	Code	Article	Application
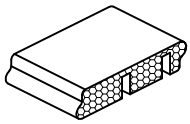	10818600	AYPC.W62.0916	Support. Quantity in pack – 160 pcs 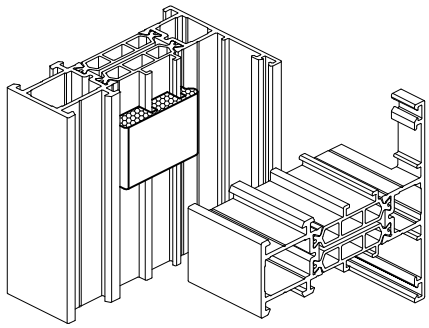 For frame / transom bar profiles AYPC.W72.0101, AYPC.W72.0121 / AYPC.W72.0301, AYPC.W72.0321
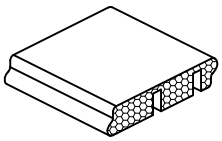	10818700	AYPC.W62.0916-01	Support. Quantity in pack – 160 pcs 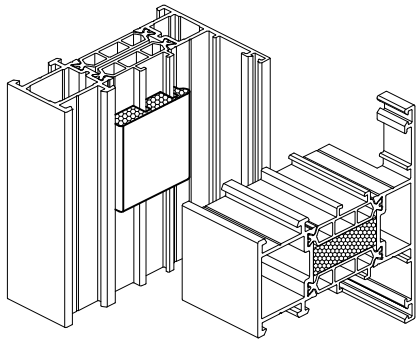 For frame / transom bar profiles AYPC.W72.0102, AYPC.W72.0122 / AYPC.W72.0302
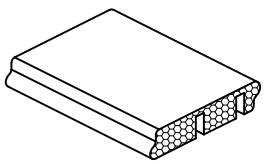	10818800	AYPC.W62.0916-02	Support. Quantity in pack – 160 pcs 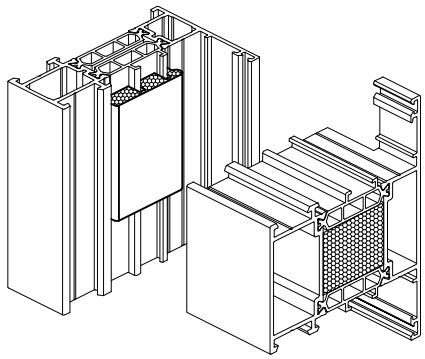 For frame / transom bar profiles AYPC.W72.0103, AYPC.W72.0123 / AYPC.W72.0303
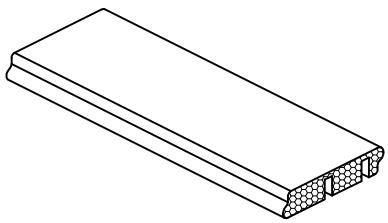	10818900	AYPC.W62.0916-03	Support. Quantity in pack – 90 pcs 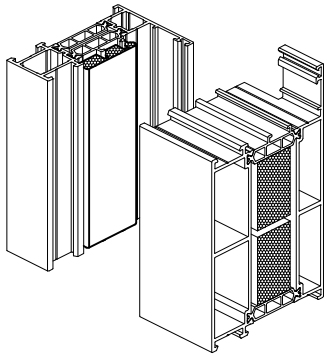 For frame profile AYPC.W72.0106

Image	Code	Article	Application
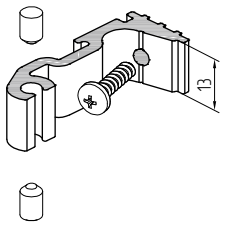	10811500	AYPC.W62.0951	Transom fixing element. Quantity in pack – 200 kits Kit includes: AYPC.W62.0950 – 1 pc, 3.9x16–A2 DIN7981 – 1 pc, pin 5x8 DIN6325 – 2 pcs Initial profile – AYPC.W62.0701 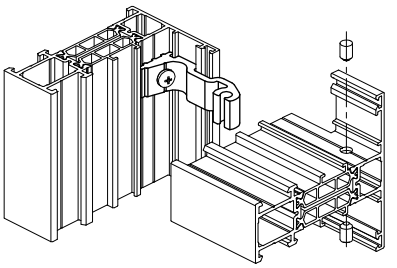 For frame / transom bar profiles AYPC.W72.0101, AYPC.W72.0121, AYPC.W72.0815 / AYPC.W72.0301, AYPC.W72.0306, AYPC.W72.0321
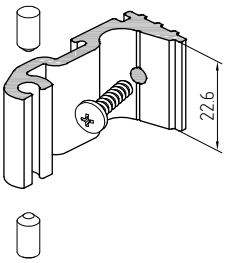	10811600	AYPC.W62.0951–01	Transom fixing element. Quantity in pack – 100 kits Kit includes: AYPC.W62.0950–01 – 1 pc, 3.9x16–A2 DIN7981 – 1 pc, pin 5x10 DIN6325D – 2 pcs Initial profile – AYPC.W62.0701 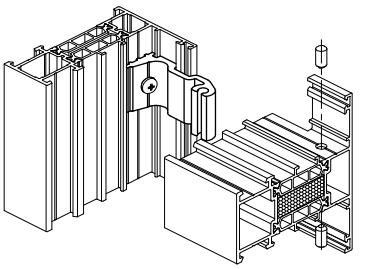 For frame / transom bar profiles AYPC.W72.0102, AYPC.W72.0107, AYPC.W72.0122 / AYPC.W72.0302, AYPC.W72.0304, AYPC.W72.0305, AYPC.W72.0307, AYPC.W72.0308
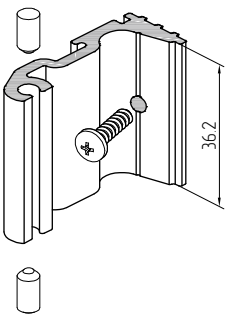	10811700	AYPC.W62.0951–02	Transom fixing element. Quantity in pack – 80 kits Kit includes: AYPC.W62.0950–02 – 1 pc, 3.9x16–A2 DIN7981 – 1 pc, pin 5x10 DIN6325D – 2 pcs Initial profile – AYPC.W62.0701 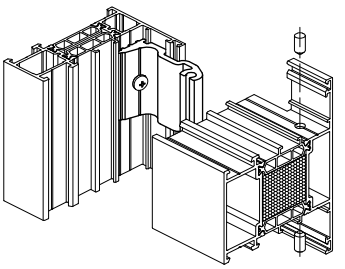 For frame / transom bar profiles AYPC.W72.0103, AYPC.W72.0123 / AYPC.W72.0303
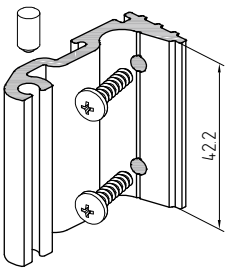	10811800	AYPC.W62.0951–03	Transom fixing element. Quantity in pack – 60 kits Kit includes: AYPC.W62.0950–03 – 1 pc, 3.9x16–A2 DIN7981 – 2 pcs, pin 5x10 DIN6325D – 2 pcs Initial profile – AYPC.W62.0701 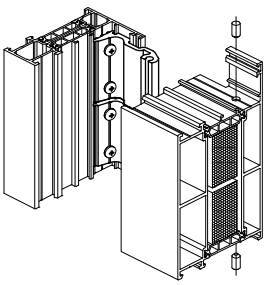 For frame profile AYPC.W72.0106

Image	Code	Article	Application
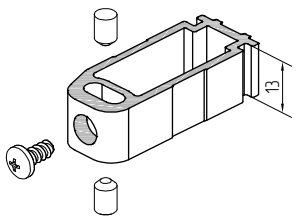	10827800	AYPC.W62.0973	Transom fixing element. Quantity in pack – 104 kits Kit includes: AYPC.W62.0972 – 1 pc, 3.9x9.5-A2 DIN7981 – 1 pc, pin 5x8 DIN6325 – 2 pcs Initial profile – AYPC.W62.0705 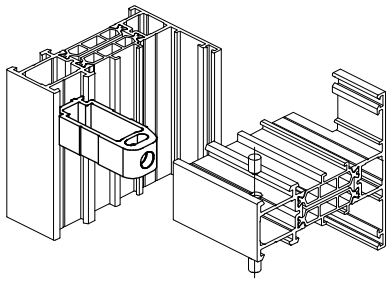 For frame / transom bar profiles AYPC.W72.0101, AYPC.W72.0121, AYPC.W72.0815 / AYPC.W72.0301, AYPC.W72.0306, AYPC.W72.0321
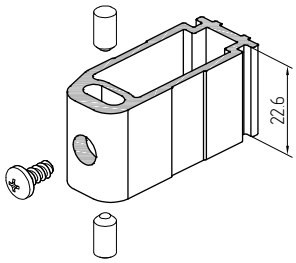	10827900	AYPC.W62.0973-01	Transom fixing element. Quantity in pack – 56 kits Kit includes: AYPC.W62.0972-01 – 1 pc, 3.9x9.5-A2 DIN7981 – 1 pc, pin 5x10 DIN6325D – 2 pcs Initial profile – AYPC.W62.0705 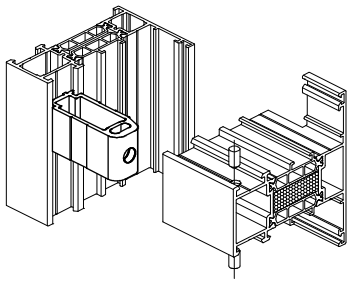 For frame / transom bar / connecting profiles AYPC.W72.0102, AYPC.W72.0107, AYPC.W72.0122 / AYPC.W72.0302, AYPC.W72.0304, AYPC.W72.0305, AYPC.W72.0307, AYPC.W72.0308 / AYPC.W72.0840
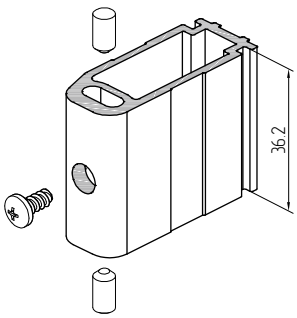	10839200	AYPC.W62.0973-02	Transom fixing element. Quantity in pack – 40 kits Kit includes: AYPC.W62.0972-02 – 1 pc, 3.9x9.5-A2 DIN7981 – 1 pc, pin 5x10 DIN6325D – 2 pcs Initial profile – AYPC.W62.0705 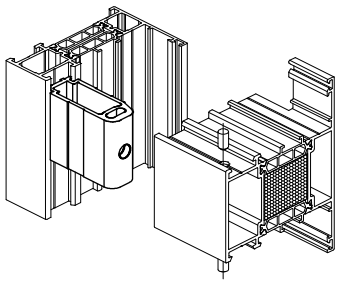 For frame / transom bar / connecting profiles AYPC.W72.0103, AYPC.W72.0123 / AYPC.W72.0303 / AYPC.W72.0841
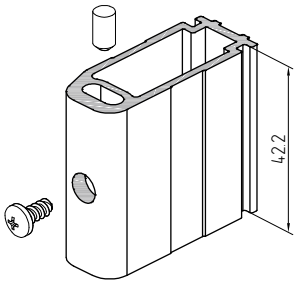	10839300	AYPC.W62.0973-03	Transom fixing element. Quantity in pack – 32 kits Kit includes: AYPC.W62.0972-03 – 1 pc, 3.9x9.5-A2 DIN7981 – 1 pc, pin 5x10 DIN6325D – 2 pcs Initial profile – AYPC.W62.0705 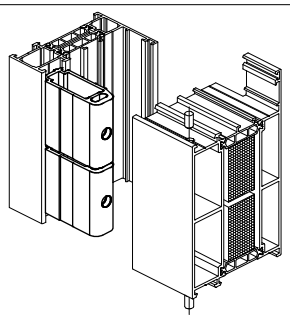 For frame profile AYPC.W72.0106

Image	Code	Article	Application
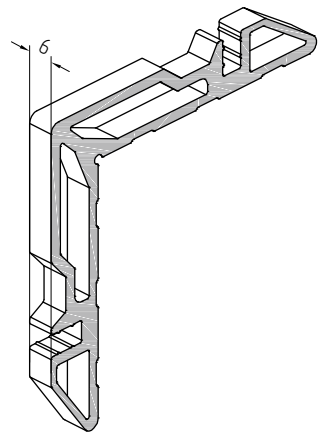	10811900	AYPC.W62.0952	Clamping corner made from AYPC.C48.0702 profile. Quantity in pack – 400 pcs 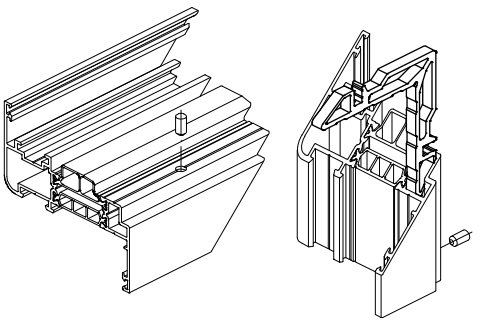 For leaf profiles AYPC.W72.0201, AYPC.W72.0221
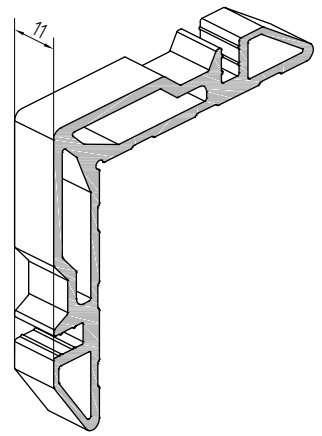	10812000	AYPC.W62.0952-01	Clamping corner made from AYPC.C48.0702 profile. Quantity in pack – 200 pcs 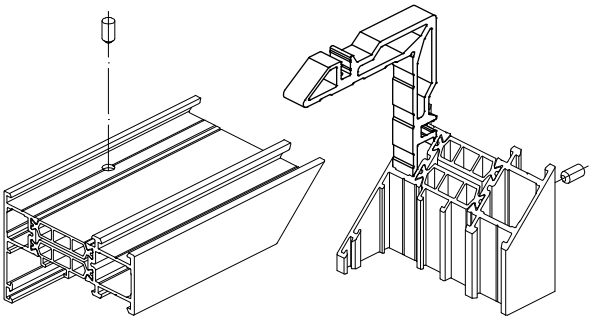 For frame / transom bar profiles AYPC.W72.0101, AYPC.W72.0121, AYPC.W72.0815 /AYPC.W72.0301
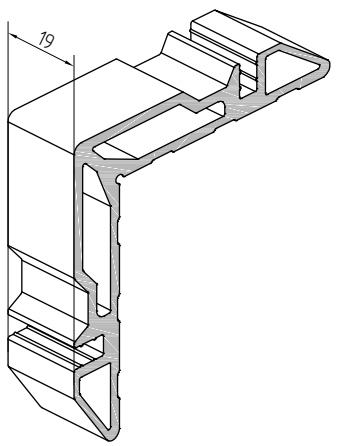	10812100	AYPC.W62.0952-02	Clamping corner made from AYPC.C48.0702 profile. Quantity in pack – 100 pcs 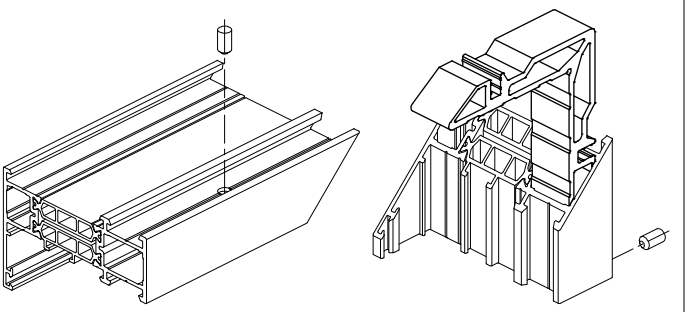 For frame / transom bar profiles AYPC.W72.0101, AYPC.W72.0121 / AYPC.W72.0301
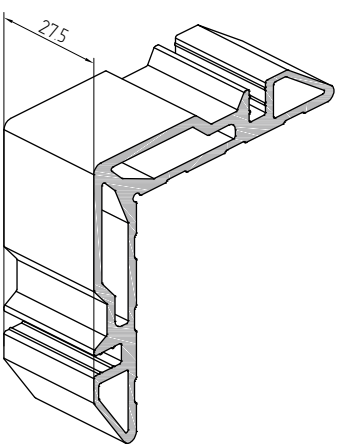	10812200	AYPC.W62.0952-03	Clamping corner made from AYPC.C48.0702 profile. Quantity in pack – 100 pcs 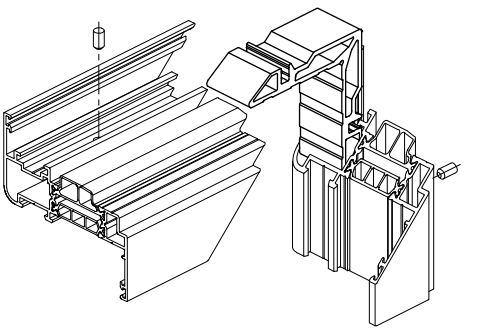 For leaf profiles AYPC.W72.0201, AYPC.W72.0221

Image	Code	Article	Application
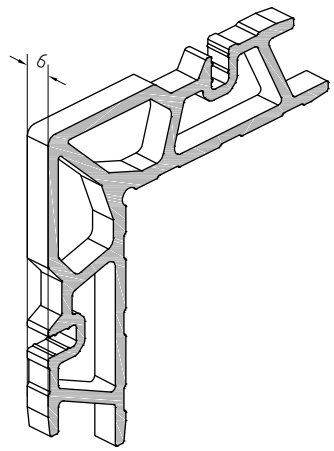	10812300	AYPC.W62.0953	Clamping corner made from AYPC.W50.0703 profile. Quantity in pack – 200 pcs 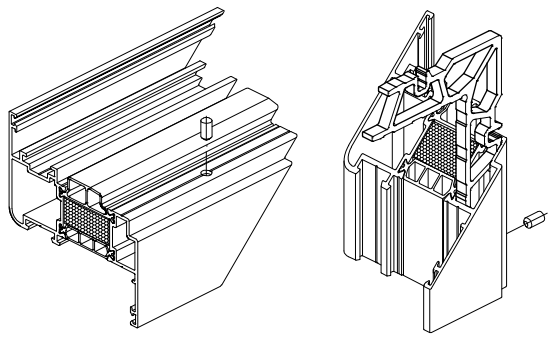 For leaf profiles AYPC.W72.0202, AYPC.W72.0212, AYPC.W72.0222
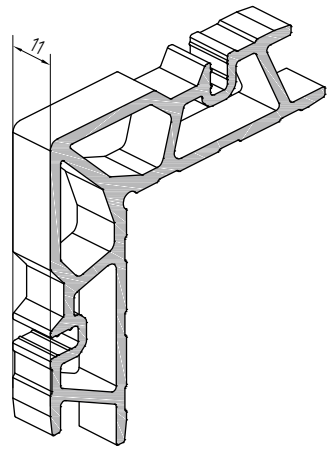	10812400	AYPC.W62.0953-01	Clamping corner made from AYPC.W50.0703 profile. Quantity in pack – 200 pcs 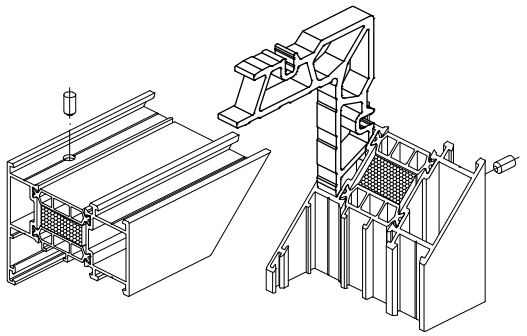 For frame / transom bar profiles AYPC.W72.0102, AYPC.W72.0107, AYPC.W72.0122 / AYPC.W72.0302
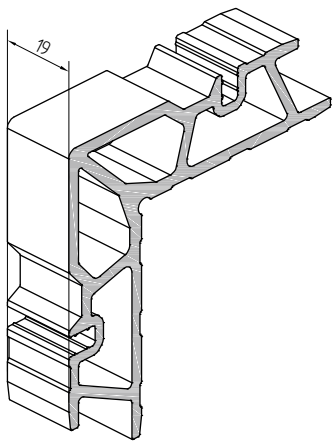	10812500	AYPC.W62.0953-02	Clamping corner made from AYPC.W50.0703 profile. Quantity in pack – 100 pcs 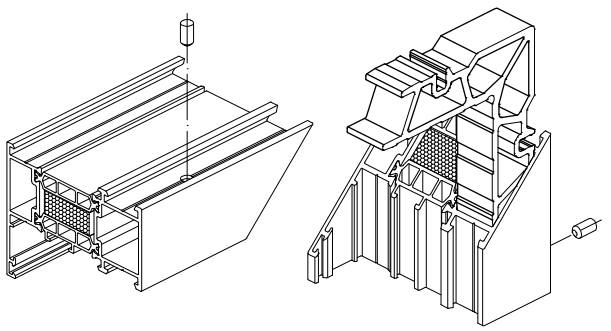 For frame / transom bar profiles AYPC.W72.0102, AYPC.W72.0107, AYPC.W72.0122 / AYPC.W72.0302
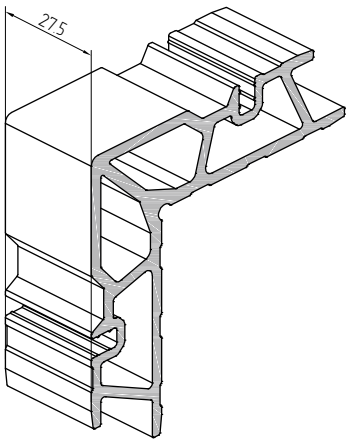	10812600	AYPC.W62.0953-03	Clamping corner made from AYPC.W50.0703 profile. Quantity in pack – 40 pcs 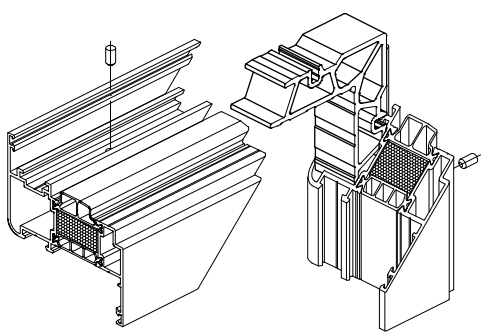 For leaf profiles AYPC.W72.0202, AYPC.W72.0212, AYPC.W72.0222

Image	Code	Article	Application
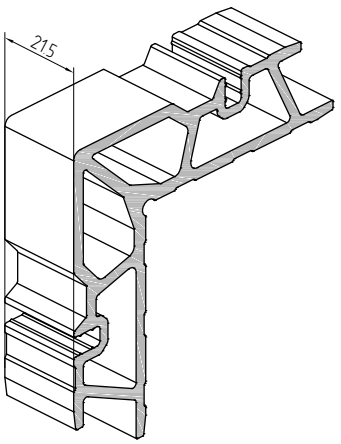	10812700	AYPC.W62.0953-04	Clamping corner made from AYPC.W50.0703 profile. Quantity in pack – 60 pcs 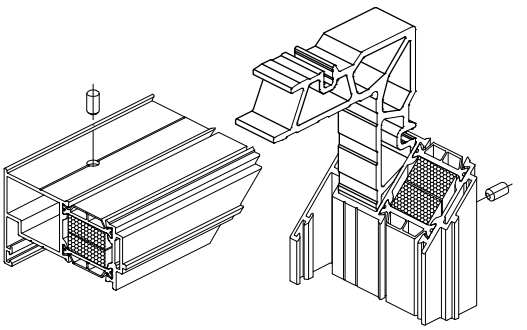 For auxiliary door profile AYPC.W72.0803E
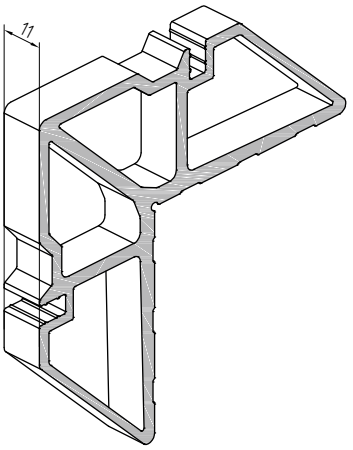	10813000	AYPC.W62.0954-02	Clamping corner made from AYPC.C48.0704 profile. Quantity in pack – 140 pcs 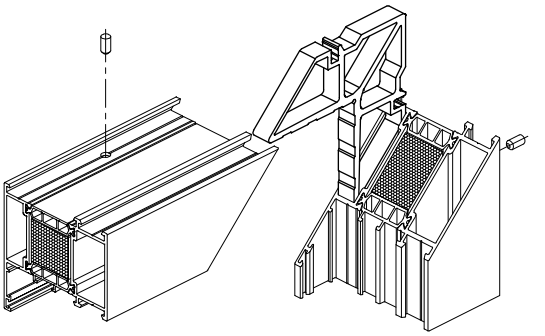 For frame / transom bar profiles AYPC.W72.0103, AYPC.W72.0123 / AYPC.W72.0303
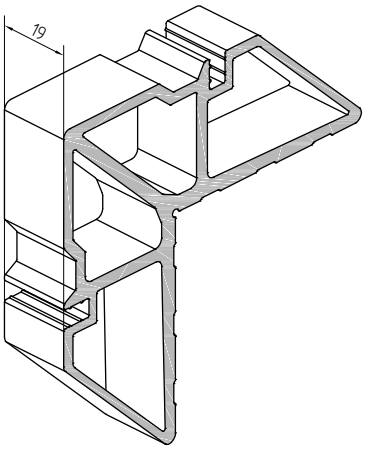	10813100	AYPC.W62.0954-03	Clamping corner made from AYPC.C48.0704 profile. Quantity in pack – 70 pcs 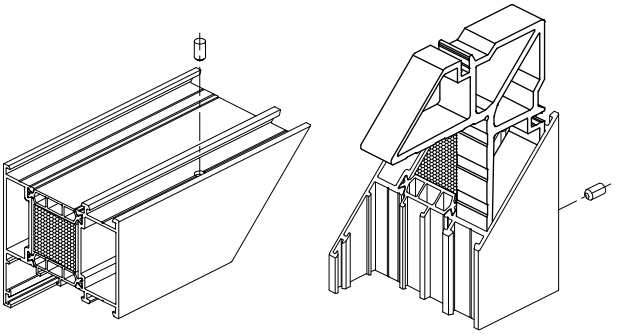 For frame / transom bar profiles AYPC.W72.0103, AYPC.W72.0123 / AYPC.W72.0303
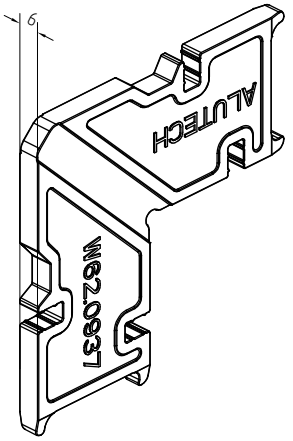	10829900	AYPC.W62.0937	Clamping corner. Quantity in pack – 60 pcs 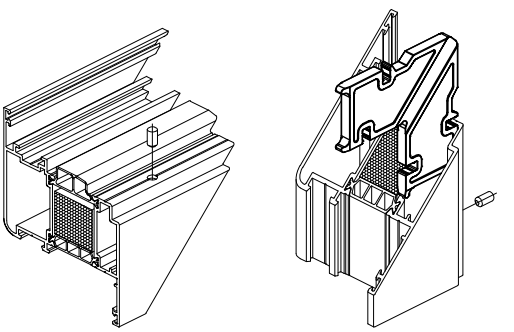 For leaf profiles AYPC.W72.0203, AYPC.W72.0223

Image	Code	Article	Application
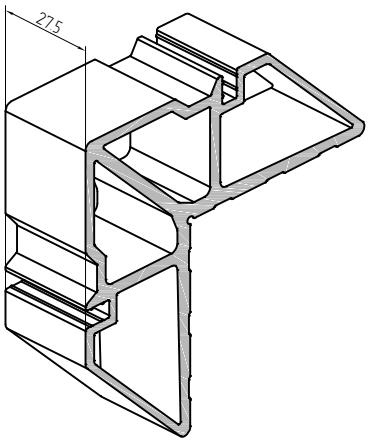	10815000	AYPC.W62.0954-05	Clamping corner made from AYPC.C48.0704 profile. Quantity in pack – 50 pcs 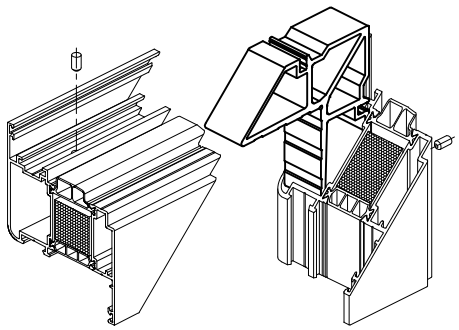 For leaf profiles AYPC.W72.0203, AYPC.W72.0223
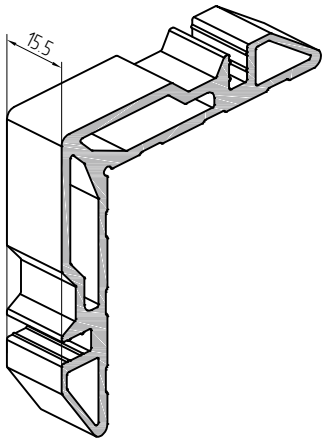	11231400	AYPC.F50.1950-05	Clamping corner made from AYPC.C48.0702 profile. Quantity in pack – 32 pcs 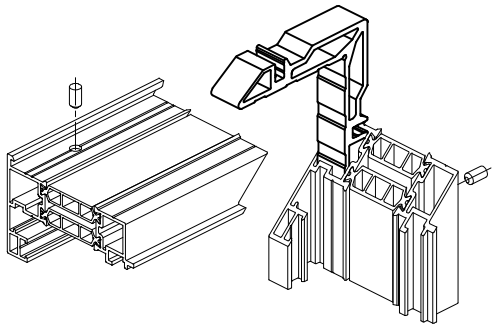 For frame profile AYPC.W72.0815
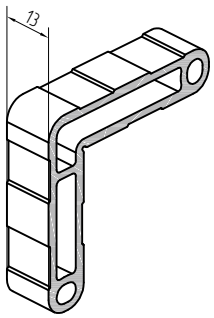	10828600	AYPC.W62.0978	Clamping corner made from AYPC.W62.0708 profile. Quantity in pack – 75 pcs 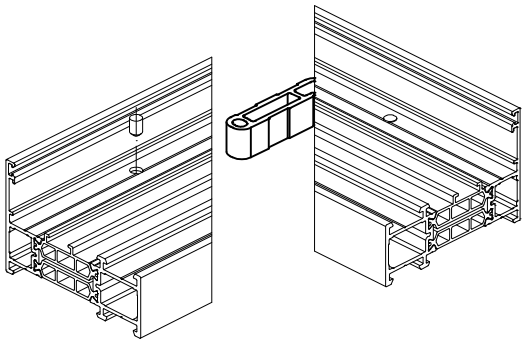 For frame / transom bar profiles AYPC.W72.0101, AYPC.W72.0301
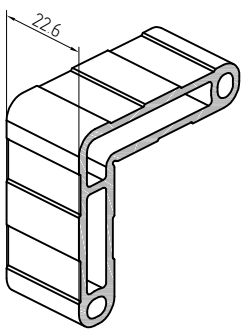	10828700	AYPC.W62.0978-01	Clamping corner made from AYPC.W62.0708 profile. Quantity in pack – 40 pcs 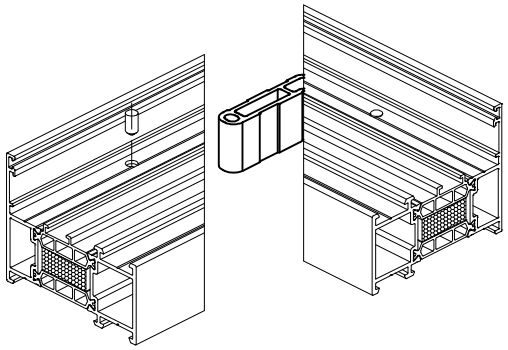 For frame / transom bar profiles AYPC.W72.0102, AYPC.W72.0302

Image	Code	Article	Application
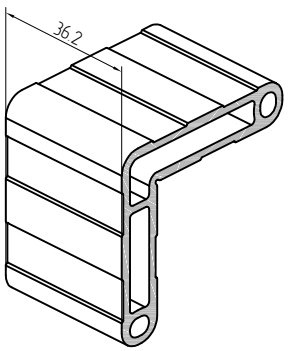	10828800	AYPC.W62.0978-02	Clamping corner made from AYPC.W62.0708 profile. Quantity in pack – 25 pcs 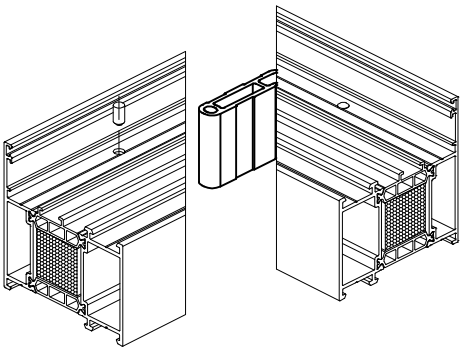 For frame / transom bar profiles AYPC.W72.0103, AYPC.W72.0303
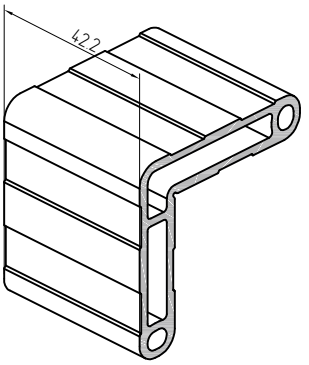	10839800	AYPC.W62.0978-03	Clamping corner made from AYPC.W62.0708 profile. Quantity in pack – 20 pcs 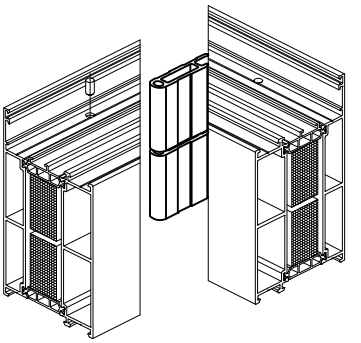 For frame profile AYPC.W72.0106
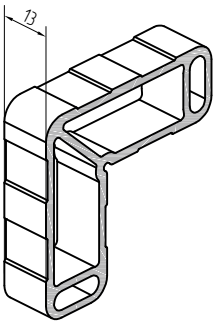	10828900	AYPC.W62.0979	Clamping corner made from AYPC.W62.0709 profile. Quantity in pack – 45 pcs 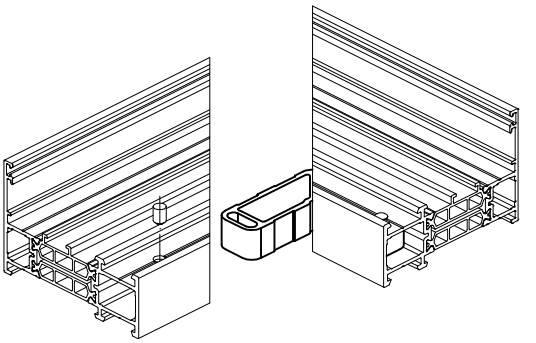 For frame / transom bar profiles AYPC.W72.0101, AYPC.W72.0301
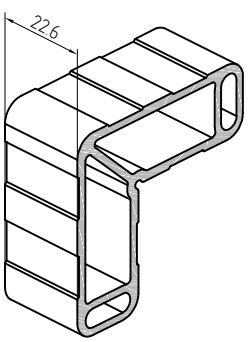	10829000	AYPC.W62.0979-01	Clamping corner made from AYPC.W62.0709 profile. Quantity in pack – 24 pcs 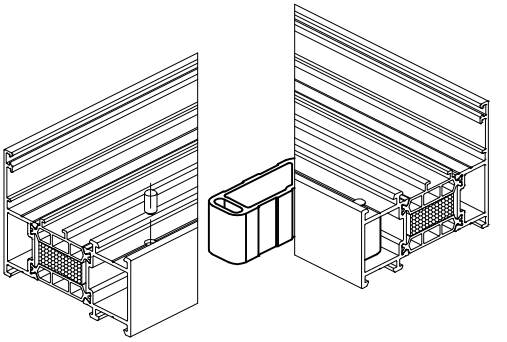 For frame / transom bar profiles AYPC.W72.0102, AYPC.W72.0302

Image	Code	Article	Application
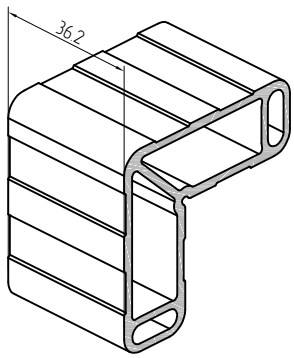	10829100	AYPC.W62.0979-02	Clamping corner made from AYPC.W62.0709 profile. Quantity in pack – 15 pcs 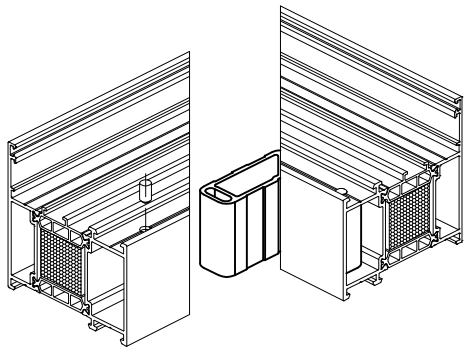 For frame / transom bar profiles AYPC.W72.0103, AYPC.W72.0303
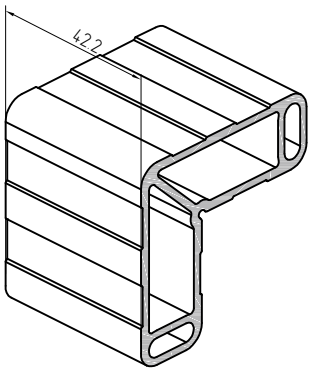	10839900	AYPC.W62.0979-03	Clamping corner made from AYPC.W62.0709 profile. Quantity in pack – 12 pcs 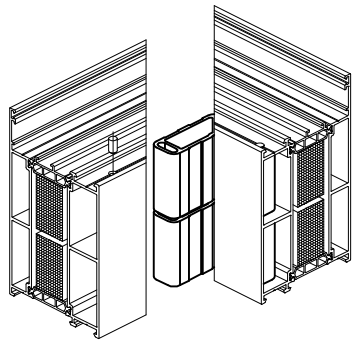 For frame profile AYPC.W72.0106
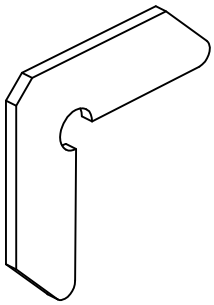	10462100	AYPC.C43.0905	Leveling corner. Quantity in pack – 200 pcs 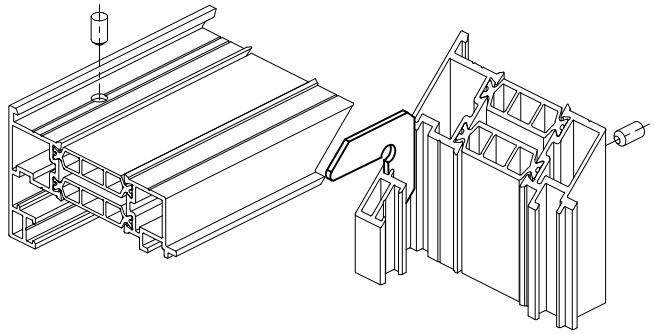 For frame profile AYPC.W72.0815
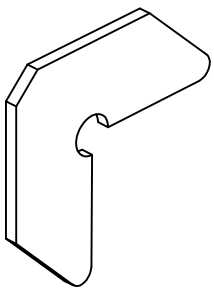	10813600	AYPC.W62.0957	Leveling corner. Quantity in pack – 200 pcs 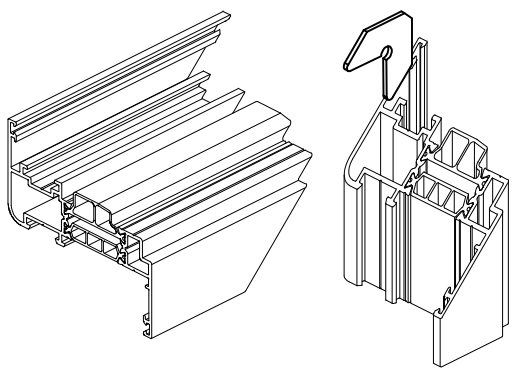

Image	Code	Article	Application
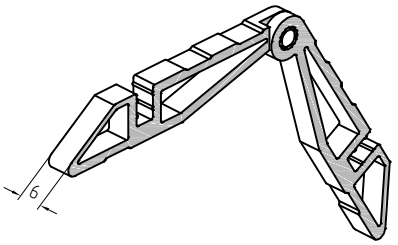	10813700	AYPC.W62.0960	Clamping corner made from AYPC.C48.0707 profile. Quantity in pack – 50 pcs 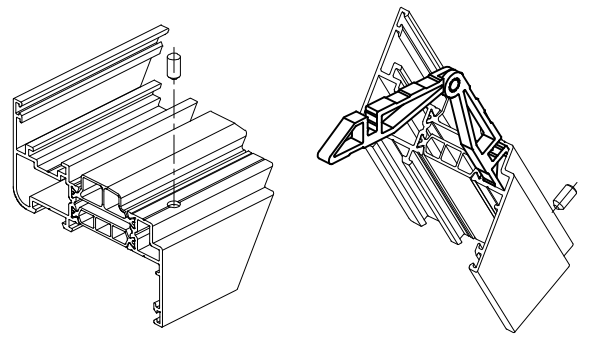 For leaf profiles AYPC.W72.0201, AYPC.W72.0221
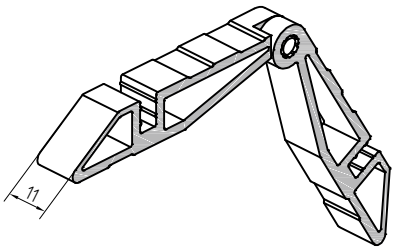	10813800	AYPC.W62.0960-01	Clamping corner made from AYPC.C48.0707 profile. Quantity in pack – 50 pcs 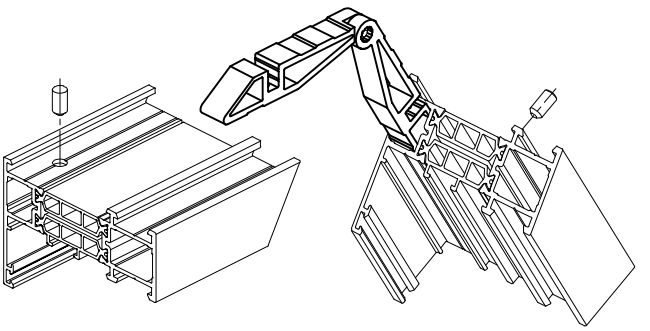 For frame / transom bar profiles AYPC.W72.0101, AYPC.W72.0121 / AYPC.W72.0301
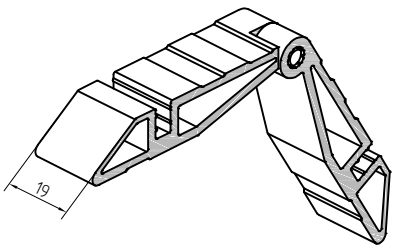	10813900	AYPC.W62.0960-02	Clamping corner made from AYPC.C48.0707 profile. Quantity in pack – 100 pcs 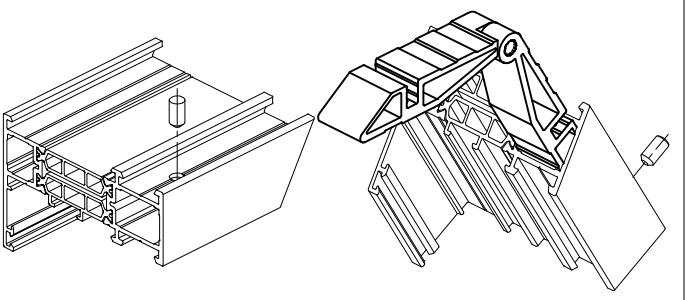 For frame / transom bar profiles AYPC.W72.0101, AYPC.W72.0121 / AYPC.W72.0301
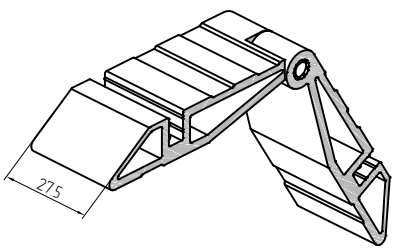	10814000	AYPC.W62.0960-03	Clamping corner made from AYPC.C48.0707 profile. Quantity in pack – 20 pcs 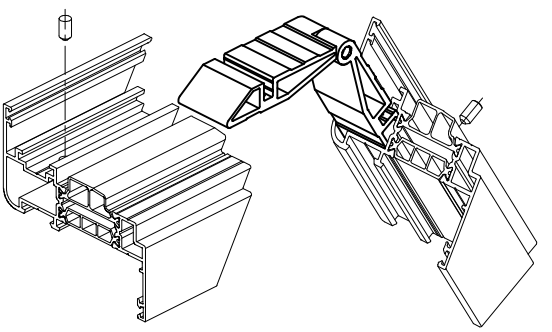 For leaf profiles AYPC.W72.0201, AYPC.W72.0221

Image	Code	Article	Application
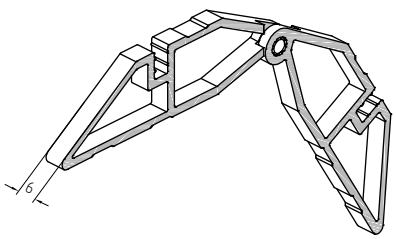	10814200	AYPC.W62.0962	Clamping corner made from AYPC.C48.0708 profile. Quantity in pack – 50 pcs 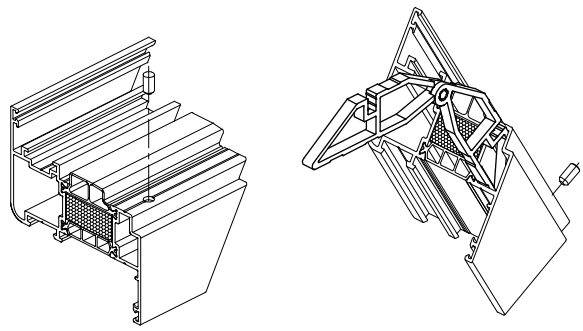 For leaf profiles AYPC.W72.0202, AYPC.W72.0212, AYPC.W72.0222
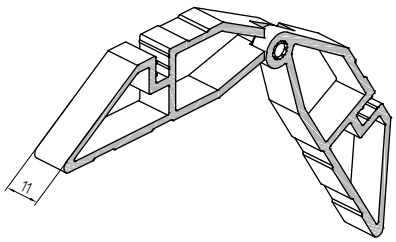	10814300	AYPC.W62.0962-01	Clamping corner made from AYPC.C48.0708 profile. Quantity in pack – 28 pcs 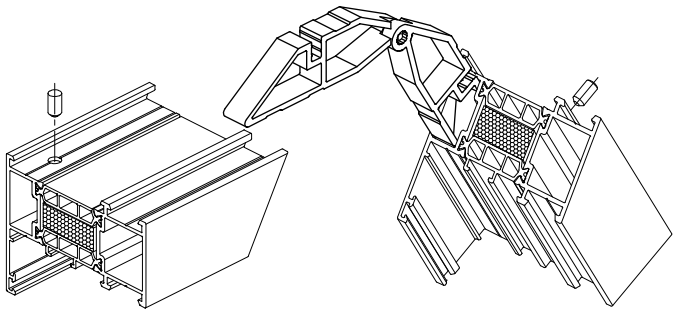 For frame / transom bar profiles AYPC.W72.0102, AYPC.W72.0122 / AYPC.W72.0302
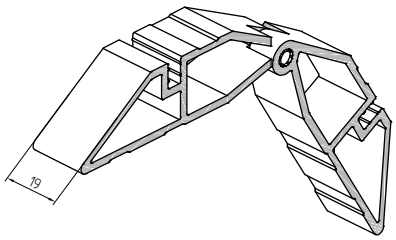	10814400	AYPC.W62.0962-02	Clamping corner made from AYPC.C48.0708 profile. Quantity in pack – 40 pcs 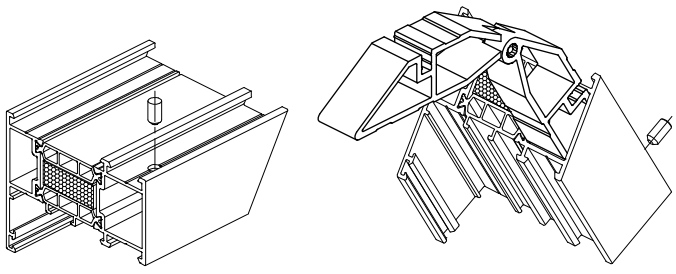 For frame / transom bar profiles AYPC.W72.0102, AYPC.W72.0122 / AYPC.W72.0302
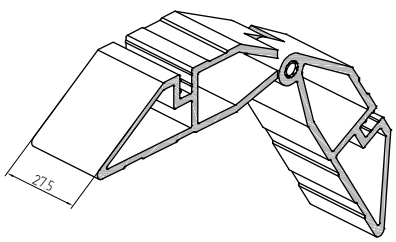	10814500	AYPC.W62.0962-03	Clamping corner made from AYPC.C48.0708 profile. Quantity in pack – 40 pcs 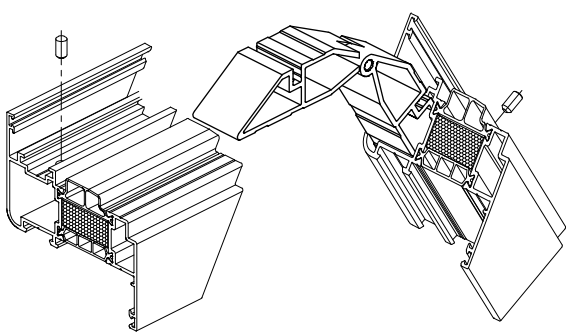 For leaf profiles AYPC.W72.0202, AYPC.W72.0212, AYPC.W72.0222

Image	Code	Article	Application
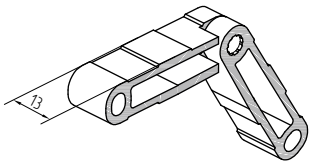	10829200	AYPC.W62.0982	Clamping corner made from AYPC.W62.0710 profile. Quantity in pack – 105 pcs 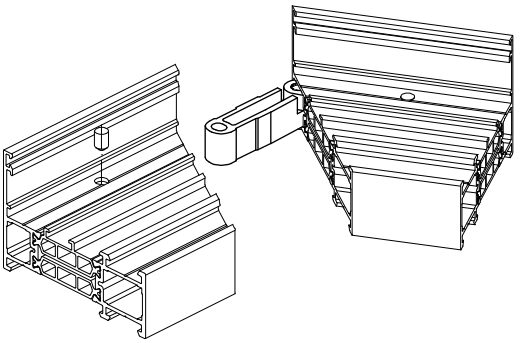 For frame / transom bar profiles AYPC.W72.0101, AYPC.W72.0301
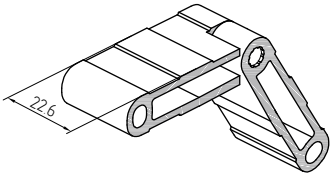	10829300	AYPC.W62.0982-01	Clamping corner made from AYPC.W62.0710 profile. Quantity in pack – 56 pcs 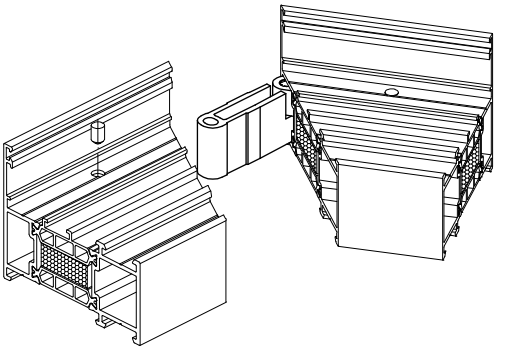 For frame / transom bar profiles AYPC.W72.0102, AYPC.W72.0302
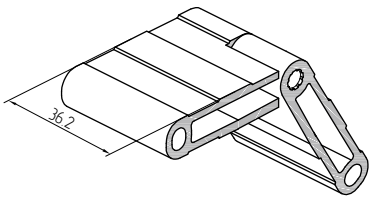	10829400	AYPC.W62.0982-02	Clamping corner made from AYPC.W62.0710 profile. Quantity in pack – 35 pcs 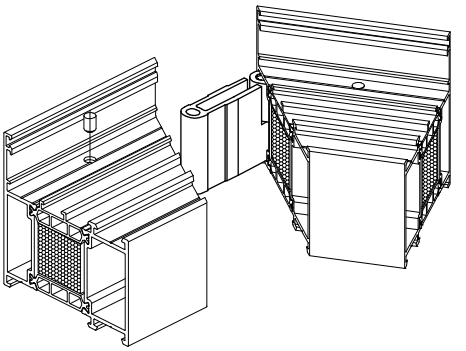 For frame / transom bar profiles AYPC.W72.0103, AYPC.W72.0303
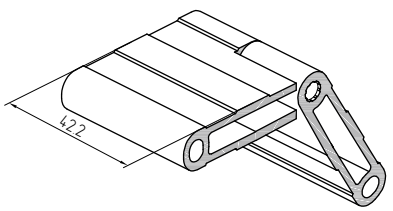	10840000	AYPC.W62.0982-03	Clamping corner made from AYPC.W62.0710 profile. Quantity in pack – 30 pcs 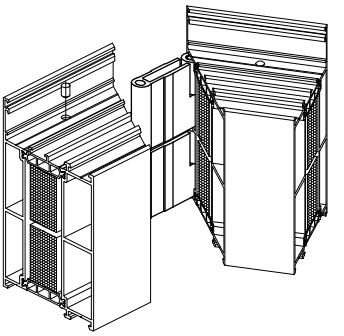 For frame profile AYPC.W72.0106

Image	Code	Article	Application
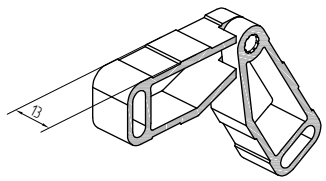	10829500	AYPC.W62.0984	Clamping corner made from AYPC.W62.0711 profile. Quantity in pack – 60 pcs 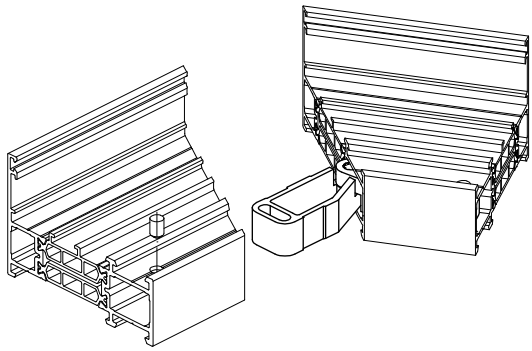 For frame / transom bar profiles AYPC.W72.0101, AYPC.W72.0301
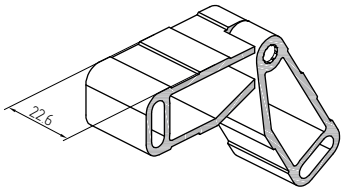	10829600	AYPC.W62.0984-01	Clamping corner made from AYPC.W62.0711 profile. Quantity in pack – 32 pcs 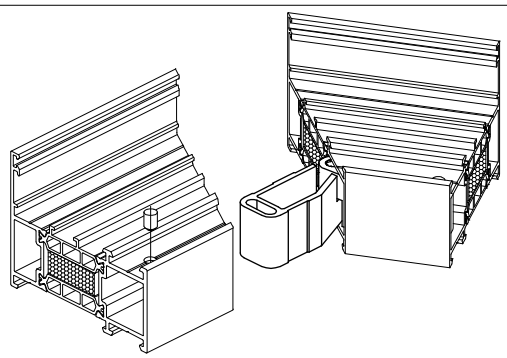 For frame / transom bar profiles AYPC.W72.0102, AYPC.W72.0302
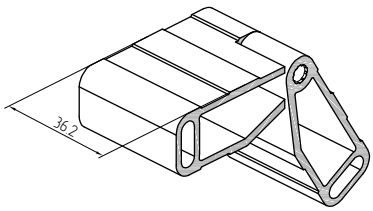	10829700	AYPC.W62.0984-02	Clamping corner made from AYPC.W62.0711 profile. Quantity in pack – 20 pcs 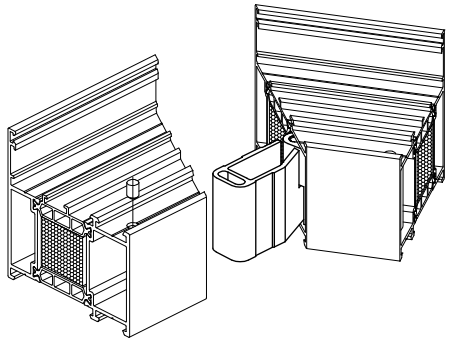 For frame / transom bar profiles AYPC.W72.0103, AYPC.W72.0303
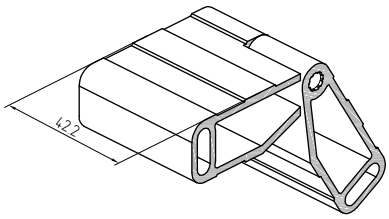	10840100	AYPC.W62.0984-03	Clamping corner made from AYPC.W62.0711 profile. Quantity in pack – 16 pcs 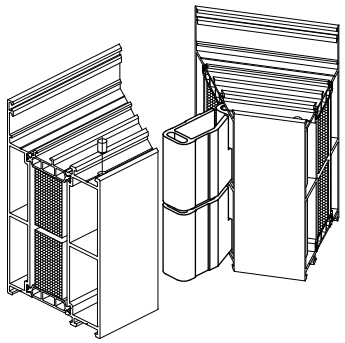 For frame profile AYPC.W72.0106

Image	Code	Article	Application
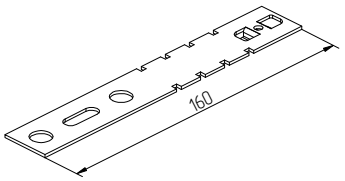	10828400	AYPC.W62.0940	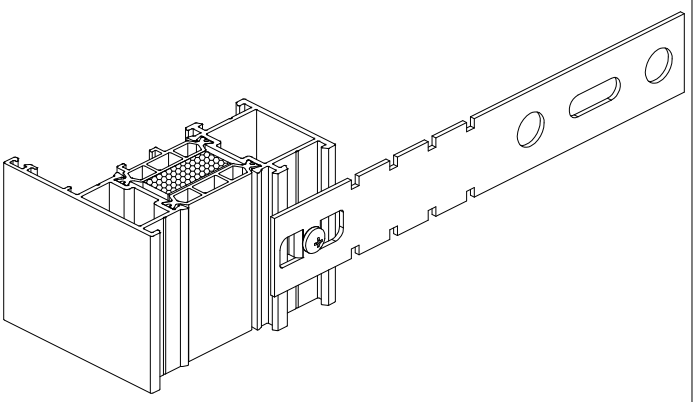 Mounting plate. Quantity in pack – 150 pcs
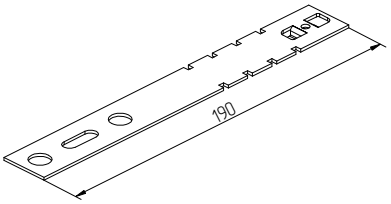	10828500	AYPC.W62.0940-01	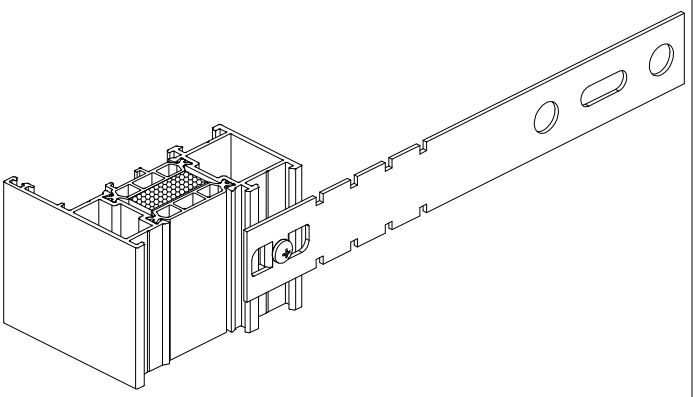 Mounting plate. Quantity in pack – 150 pcs

Image	Code	Article	Quantity in pack
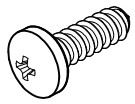 Self-tapping screw	–	3.5x19 DIN7981	100 pcs
	18101000	3.9x9,5 DIN7981	
	18100600	3.9x13 DIN7981	
	18102000	3.9x16 DIN7981	
	18101200	4.8x16 DIN7981	
	18108900	4.8x19 DIN7981	
	18101300	4.8x25 DIN7981	
	18100200	4.8x32 DIN7981	
	18105000	4.8x45 DIN7981	
	–	4.8x50 DIN7981	
	–	4.8x60 DIN7981	
	–	4.8x70 DIN7981	
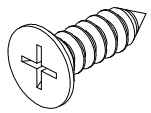 Countersunk self-tapping screw	–	3.5x13 DIN7982	100 pcs
	18102600	3.9x16 DIN7982	
	18102800	3.9x32 DIN7982	
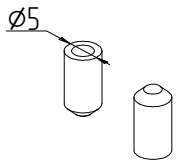 Pin	18101700	5x8 DIN6325	100 pcs
	18112400	5x10 DIN6325D	100 pcs Supplied only by Alutech. Replacement with 5x10 DIN6325 pin is allowed.
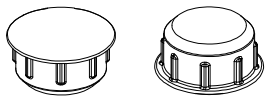 Decorative plug Ø10	12655100 black	AYPC.SL160.0928	100 pcs
	12655101 white		

Drawing	Outer gasket	Infill unit thickness, mm	Inner gasket	Glass bead
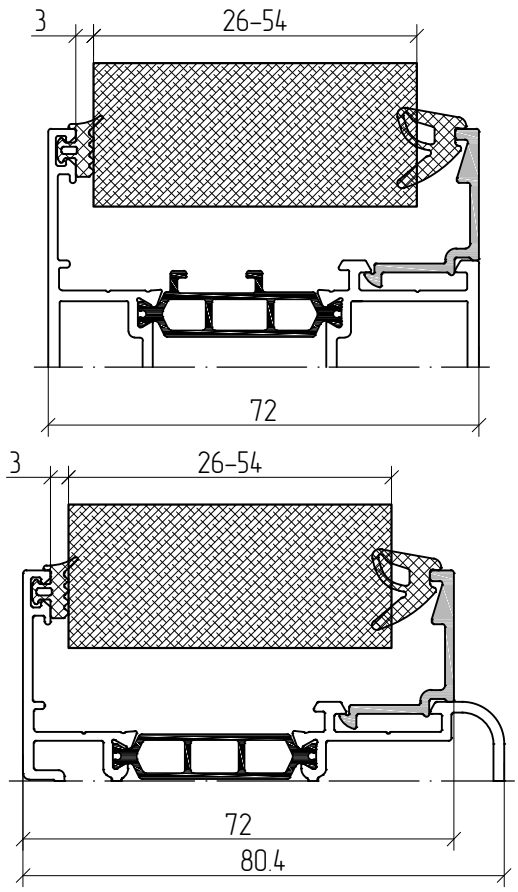	 FRK29-01	26	FRK191, FRK193	AYPC.C48.0608
		28	FRK192, FRK194	AYPC.C48.0607
		30	FRK191, FRK193	AYPC.C48.0607
		32	FRK192, FRK194	AYPC.C48.0606
		34	FRK191, FRK193	AYPC.C48.0606
		36	FRK191, FRK193	AYPC.C48.0606
		38	FRK192, FRK194	AYPC.C48.0605
		40	FRK191, FRK193	AYPC.C48.0605
		42	FRK192, FRK194	AYPC.C48.0604
		44	FRK191, FRK193	AYPC.C48.0604
		46	FRK192, FRK194	AYPC.C48.0603
		48	FRK191, FRK193	AYPC.C48.0603
		50	FRK192, FRK194	AYPC.C48.0602
		52	FRK191, FRK193	AYPC.C48.0602
		54	FRK192, FRK194	AYPC.C48.0601

Infill unit gaskets	Outer gasket	Inner gasket			
Article	FRK29-01	FRK191	FRK192	FRK193	FRK194

Application of bearing and leveling supports

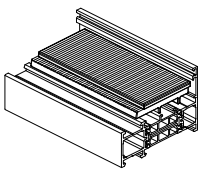

AYPC.C48.0601 AYPC.C48.0602 AYPC.C48.0603 AYPC.C48.0604 AYPC.C48.0605 AYPC.C48.0606 AYPC.C48.0607 AYPC.C48.0608

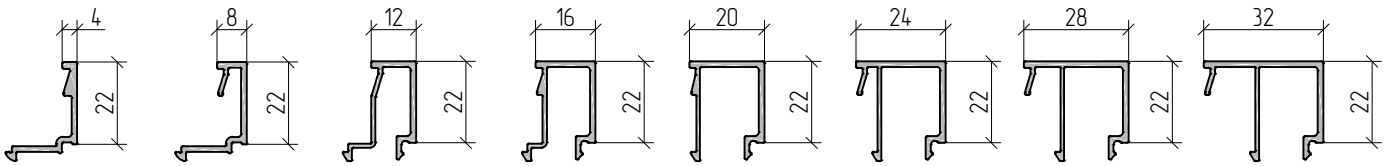

Note:
Data in the table is applicable to all system profiles with a mounting depth of 72 mm.
Data given in the table is for reference, the values are suitable for preliminary calculation. In case of practical use, it is necessary to check their validity on the basis of actual parameters, such as accuracy of infill unit manufacturing (tolerances); accuracy of gaskets manufacturing (tolerances); conditions of gasket installation and system assemblage; tolerances for glass bead profile and tolerances for combined profiles assemblage.
For correct system operation the gaskets must be force fitted.

Drawing	Outer gasket	Infill unit thickness, mm	Inner gasket	Glass bead
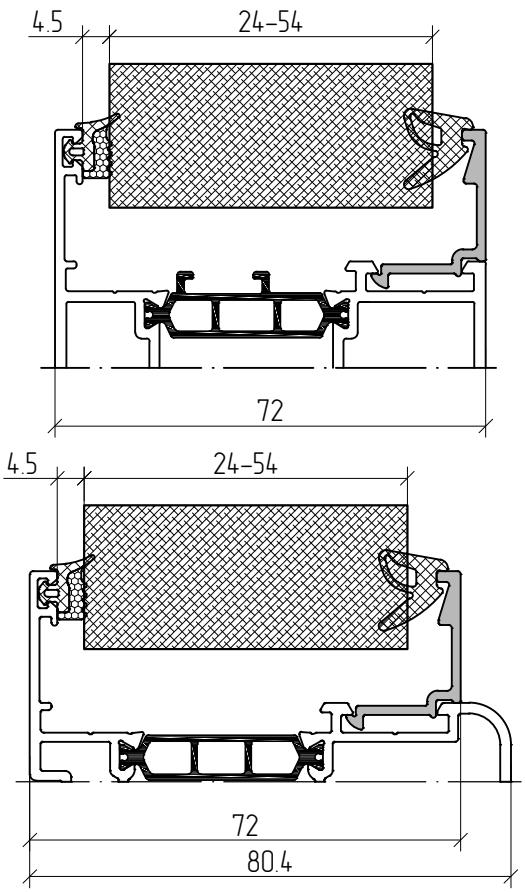	FRK197	24	FRK192, FRK194	AYPC.C48.0608
		26	FRK191, FRK193	AYPC.C48.0608
		28	FRK192, FRK194	AYPC.C48.0607
		30	FRK191, FRK193	AYPC.C48.0607
		32	FRK192, FRK194	AYPC.C48.0606
		34	FRK191, FRK193	AYPC.C48.0606
		36	FRK192, FRK194	AYPC.C48.0605
		38	FRK191, FRK193	AYPC.C48.0605
		40	FRK192, FRK194	AYPC.C48.0604
		42	FRK191, FRK193	AYPC.C48.0604
		44	FRK192, FRK194	AYPC.C48.0603
		46	FRK191, FRK193	AYPC.C48.0603
		48	FRK192, FRK194	AYPC.C48.0602
		50	FRK191, FRK193	AYPC.C48.0602
		52	FRK192, FRK194	AYPC.C48.0601
		54	FRK191, FRK193	AYPC.C48.0601

Infill unit gaskets	Outer gasket	Inner gasket			
				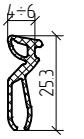	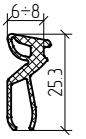
Article	FRK197	FRK191	FRK192	FRK193	FRK194

Application of bearing and leveling supports

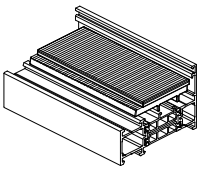

AYPC.C48.0601 AYPC.C48.0602 AYPC.C48.0603 AYPC.C48.0604 AYPC.C48.0605 AYPC.C48.0606 AYPC.C48.0607 AYPC.C48.0608

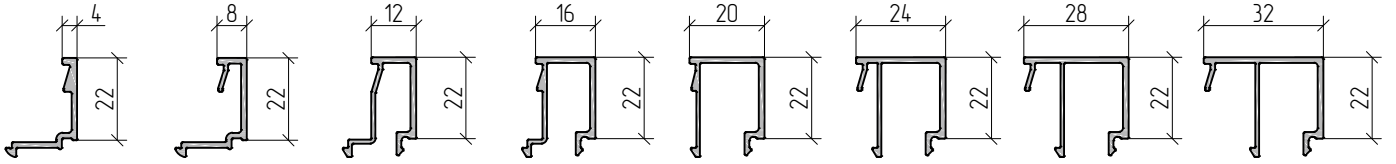

Note:
Data in the table is applicable to all system profiles with a mounting depth of 72 mm.
Data given in the table is for reference, the values are suitable for preliminary calculation. In case of practical use, it is necessary to check their validity on the basis of actual parameters, such as accuracy of infill unit manufacturing (tolerances); accuracy of gaskets manufacturing (tolerances); conditions of gasket installation and system assemblage; tolerances for glass bead profile and tolerances for combined profiles assemblage.
For correct system operation the gaskets must be force fitted.

Drawing	Outer gasket	Infill unit thickness, mm	Inner gasket	Glass bead
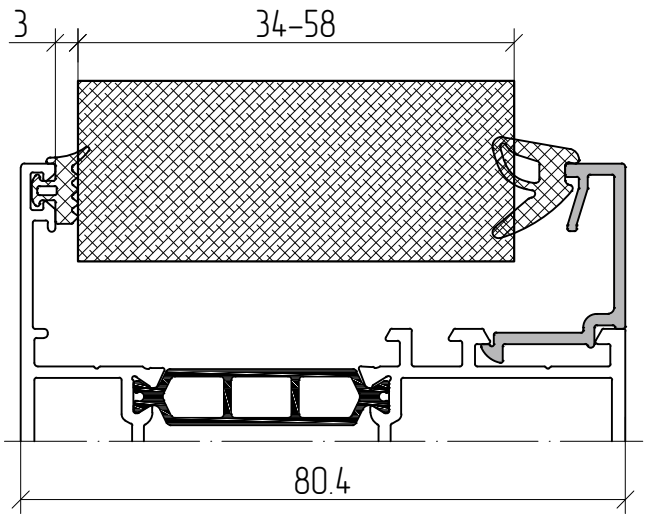 AYPC.W72.0221 AYPC.W72.0222 AYPC.W72.0223 AYPC.W72.0321	FRK29-01	34	FRK192, FRK194	AYPC.C48.0608
		36	FRK192, FRK194	AYPC.C48.0607
		38	FRK192, FRK194	AYPC.C48.0607
		40	FRK192, FRK194	AYPC.C48.0606
		42	FRK192, FRK194	AYPC.C48.0606
		44	FRK191, FRK193	AYPC.C48.0606
		46	FRK192, FRK194	AYPC.C48.0605
		48	FRK191, FRK193	AYPC.C48.0605
		50	FRK192, FRK194	AYPC.C48.0604
		52	FRK191, FRK193	AYPC.C48.0604
		54	FRK192, FRK194	AYPC.C48.0603
		56	FRK191, FRK193	AYPC.C48.0603
		58	FRK192, FRK194	AYPC.C48.0602

Infill unit gaskets	Outer gasket	Inner gasket			
					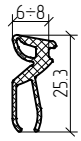
Article	FRK29-01	FRK191	FRK192	FRK193	FRK194

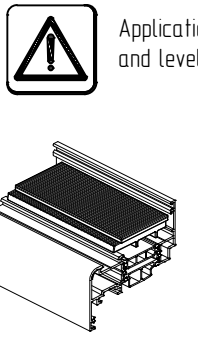

Application of bearing and leveling supports

AYPC.C48.0602
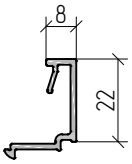

AYPC.C48.0603
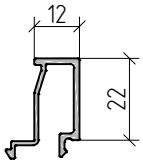

AYPC.C48.0604
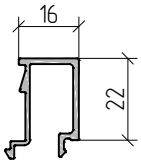

AYPC.C48.0605
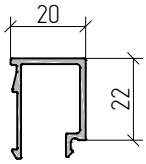

AYPC.C48.0606
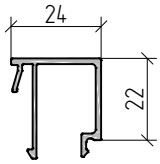

AYPC.C48.0607
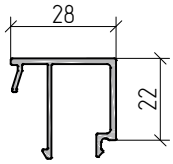

AYPC.C48.0608
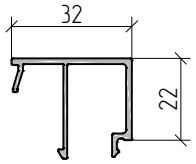

Note:

Data given in the table is for reference, the values are suitable for preliminary calculation. In case of practical use, it is necessary to check their validity on the basis of actual parameters, such as accuracy of infill unit manufacturing (tolerances); accuracy of gaskets manufacturing (tolerances); conditions of gasket installation and system assemblage; tolerances for glass bead profile and tolerances for combined profiles assemblage.
For correct system operation the gaskets must be force fitted.

Drawing	Outer gasket	Infill unit thickness, mm	Inner gasket	Glass bead
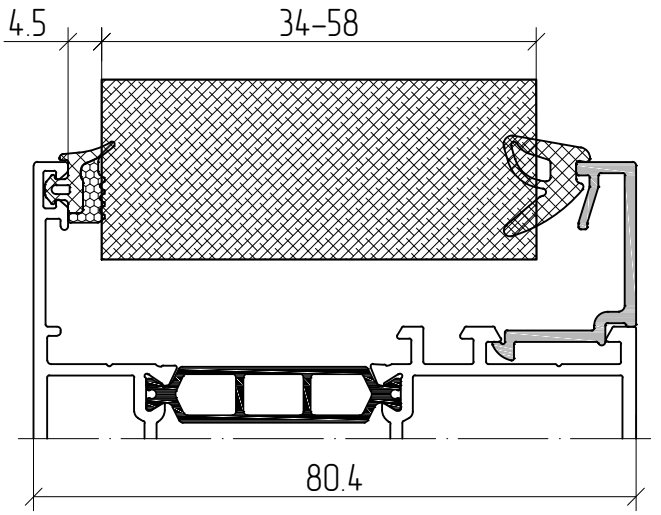 AYPC.W72.0221 AYPC.W72.0222 AYPC.W72.0223 AYPC.W72.0321	FRK197	34	FRK191, FRK193	AYPC.C48.0608
		36	FRK192, FRK194	AYPC.C48.0607
		38	FRK191, FRK193	AYPC.C48.0607
		40	FRK192, FRK194	AYPC.C48.0606
		42	FRK191, FRK193	AYPC.C48.0606
		44	FRK192, FRK194	AYPC.C48.0605
		46	FRK191, FRK193	AYPC.C48.0605
		48	FRK192, FRK194	AYPC.C48.0604
		50	FRK191, FRK193	AYPC.C48.0604
		52	FRK192, FRK194	AYPC.C48.0603
		54	FRK191, FRK193	AYPC.C48.0603
		56	FRK192, FRK194	AYPC.C48.0602
		58	FRK191, FRK193	AYPC.C48.0602

Infill unit gaskets	Outer gasket	Inner gasket			
				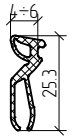	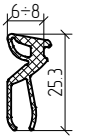
Article	FRK197	FRK191	FRK192	FRK193	FRK194

Application of bearing and leveling supports

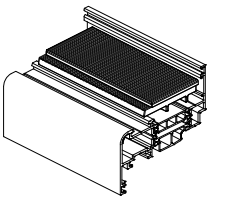

AYPC.C48.0602
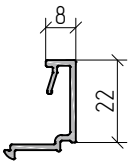

AYPC.C48.0603
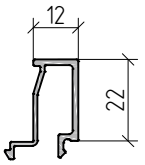

AYPC.C48.0604
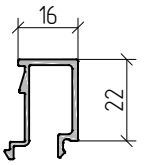

AYPC.C48.0605
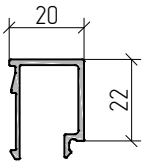

AYPC.C48.0606
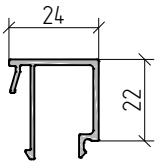

AYPC.C48.0607
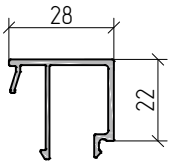

AYPC.C48.0608
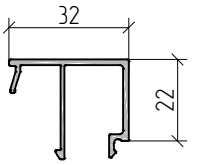

Note:

Data given in the table is for reference, the values are suitable for preliminary calculation. In case of practical use, it is necessary to check their validity on the basis of actual parameters, such as accuracy of infill unit manufacturing (tolerances); accuracy of gaskets manufacturing (tolerances); conditions of gasket installation and system assemblage; tolerances for glass bead profile and tolerances for combined profiles assemblage.
For correct system operation the gaskets must be force fitted.

Application of bearing and leveling infill unit supports

Drawing	Infill unit thickness, mm	Bearing support	Leveling support
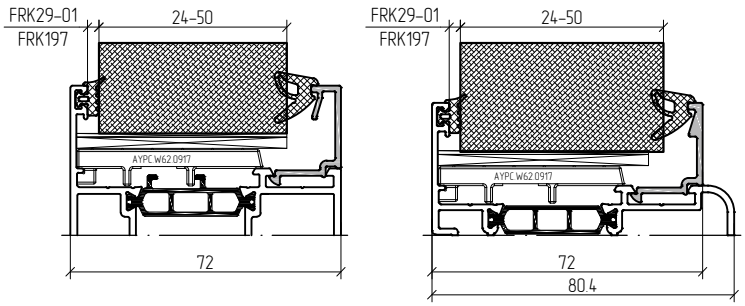	24–32	AYPC.W62.0917	100x38x1(3)
	34–38	AYPC.W62.0917	100x44x1(3)
	40–44	AYPC.W62.0917	100x50x1(3)
	46–50	AYPC.W62.0917	100x56x1(3)
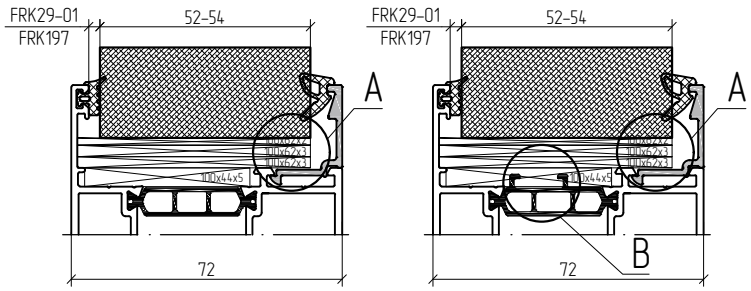	52–54	–	100x44x5 100x62x2 100x62x3
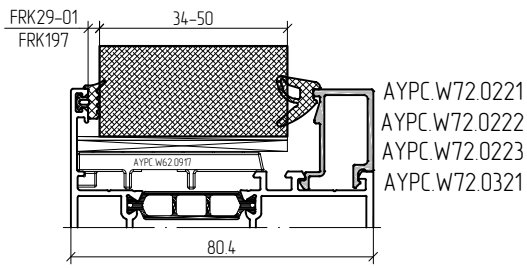 AYPC.W72.0221 AYPC.W72.0222 AYPC.W72.0223 AYPC.W72.0321	34–36	AYPC.W62.0917	100x38x1(3)
	38–40	AYPC.W62.0917	100x44x1(3)
	42–44	AYPC.W62.0917	100x50x1(3)
	46–50	AYPC.W62.0917	100x56x1(3)
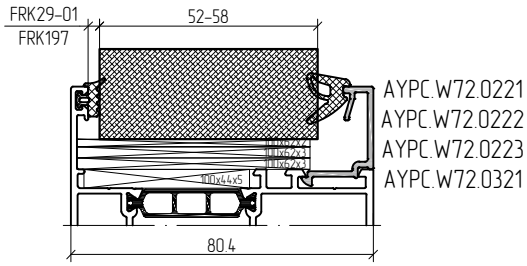 AYPC.W72.0221 AYPC.W72.0222 AYPC.W72.0223 AYPC.W72.0321	52–58	–	100x44x5 100x62x2 100x62x3

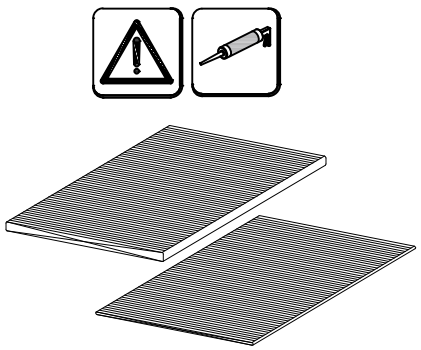

Install on silicone for correct positioning

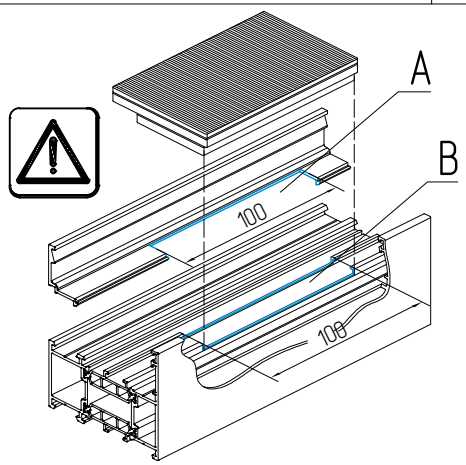

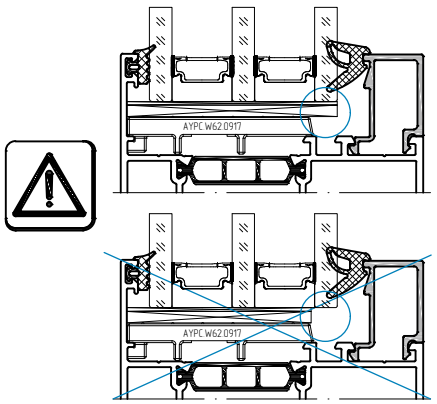

Drawing	Infill unit thickness, mm	A	B	C	D
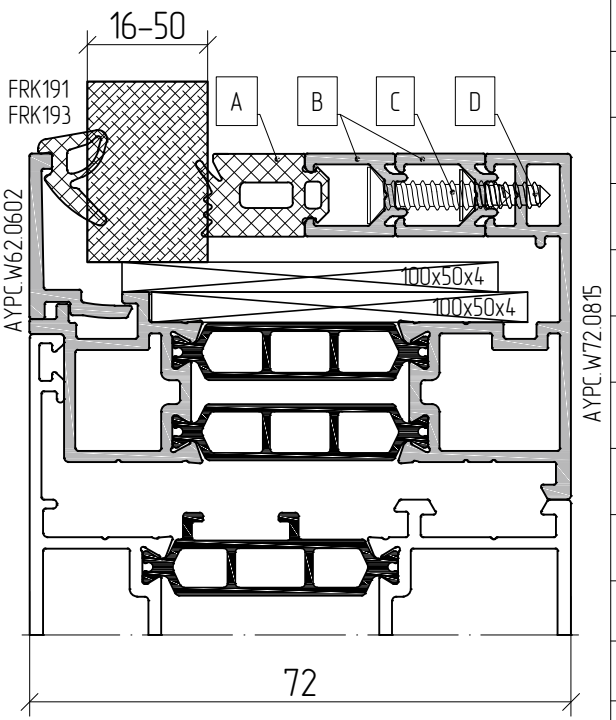	16	FRK19	AYPC.F50.0702 AYPC.F50.0702	3.9x19–A2 DIN7982	3.5x13–A2 DIN7982
	18	FRK18	AYPC.F50.0702 AYPC.F50.0702	3.9x19–A2 DIN7982	3.5x13–A2 DIN7982
	20	FRK17	AYPC.F50.0702 AYPC.F50.0702	3.9x19–A2 DIN7982	3.5x13–A2 DIN7982
	22	FRK16	AYPC.F50.0702 AYPC.F50.0702	3.9x19–A2 DIN7982	3.5x13–A2 DIN7982
	24	FRK15	AYPC.F50.0702 AYPC.F50.0702	3.9x19–A2 DIN7982	3.5x13–A2 DIN7982
	26	FRK14	AYPC.F50.0702 AYPC.F50.0702	3.9x19–A2 DIN7982	3.5x13–A2 DIN7982
	28	FRK19	AYPC.F50.0702	–	3.5x13–A2 DIN7982
	30	FRK18	AYPC.F50.0702	–	3.5x13–A2 DIN7982
	32	FRK17	AYPC.F50.0702	–	3.5x13–A2 DIN7982
	34	FRK16	AYPC.F50.0702	–	3.5x13–A2 DIN7982
	36	FRK15	AYPC.F50.0702	–	3.5x13–A2 DIN7982
	38	FRK14	AYPC.F50.0702	–	3.5x13–A2 DIN7982
	40	FRK19	–	–	–
	42	FRK18	–	–	–
	44	FRK17	–	–	–
	46	FRK16	–	–	–
	48	FRK15	–	–	–
	50	FRK14	–	–	–

Infill unit gaskets	Outer gasket	
	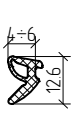	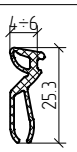
Article	FRK191	FRK193

Note:
FRK14–FRK19 gaskets, AYPC.F50.0702 profile data is provided in ALT F50 catalogue.
Data given in the table is for reference, the values are suitable for preliminary calculation. In case of practical use, it is necessary to check their validity on the basis of actual parameters, such as accuracy of infill unit manufacturing (tolerances); accuracy of gaskets manufacturing (tolerances); conditions of gasket installation and system assemblage; tolerances for glass bead profile and tolerances for combined profiles assemblage.
For correct system operation the gaskets must be force fitted.

Drawing	Infill unit thickness, mm	A	B	C	D
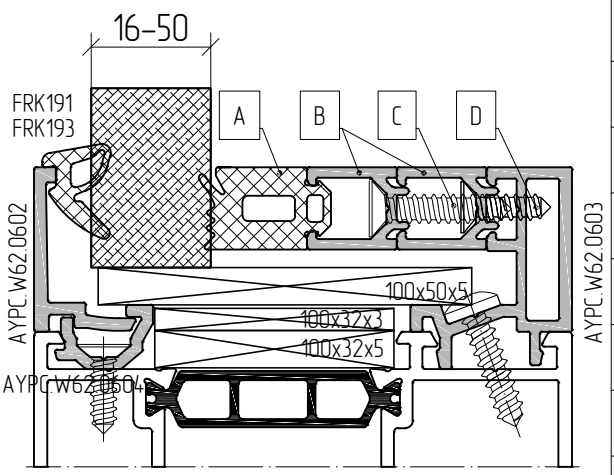	16	FRK19	AYPC.F50.0702 AYPC.F50.0702	3.9x19–A2 DIN7982	3.5x13–A2 DIN7982
	18	FRK18	AYPC.F50.0702 AYPC.F50.0702	3.9x19–A2 DIN7982	3.5x13–A2 DIN7982
	20	FRK17	AYPC.F50.0702 AYPC.F50.0702	3.9x19–A2 DIN7982	3.5x13–A2 DIN7982
	22	FRK16	AYPC.F50.0702 AYPC.F50.0702	3.9x19–A2 DIN7982	3.5x13–A2 DIN7982
	24	FRK15	AYPC.F50.0702 AYPC.F50.0702	3.9x19–A2 DIN7982	3.5x13–A2 DIN7982
	26	FRK14	AYPC.F50.0702 AYPC.F50.0702	3.9x19–A2 DIN7982	3.5x13–A2 DIN7982
	28	FRK19	AYPC.F50.0702	–	3.5x13–A2 DIN7982
	30	FRK18	AYPC.F50.0702	–	3.5x13–A2 DIN7982
	32	FRK17	AYPC.F50.0702	–	3.5x13–A2 DIN7982
	34	FRK16	AYPC.F50.0702	–	3.5x13–A2 DIN7982
	36	FRK15	AYPC.F50.0702	–	3.5x13–A2 DIN7982
	38	FRK14	AYPC.F50.0702	–	3.5x13–A2 DIN7982
	40	FRK19	–	–	–
	42	FRK18	–	–	–
	44	FRK17	–	–	–
	46	FRK16	–	–	–
	48	FRK15	–	–	–
	50	FRK14	–	–	–

Infill unit gaskets	Outer gasket	
	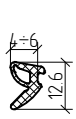	
Article	FRK191	FRK193

Note:

FRK14–FRK19 gaskets, AYPC.F50.0702 profile data is provided in ALT F50 catalogue.

Data given in the table is for reference, the values are suitable for preliminary calculation. In case of practical use, it is necessary to check their validity on the basis of actual parameters, such as accuracy of infill unit manufacturing (tolerances); accuracy of gaskets manufacturing (tolerances); conditions of gasket installation and system assemblage; tolerances for glass bead profile and tolerances for combined profiles assemblage.

For correct system operation the gaskets must be force fitted.

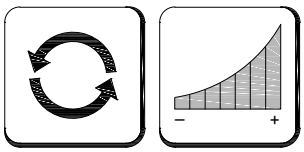

Option 1

FRK197 FRK179

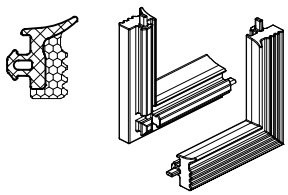

FRK195 FRK193 FRK194

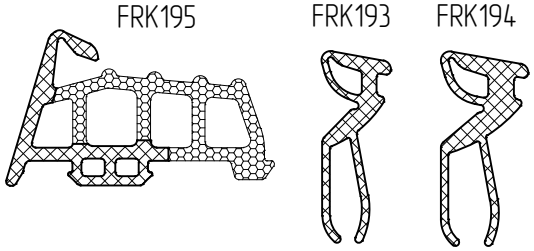

AYPC.W72.0911 Thermal insulation insert

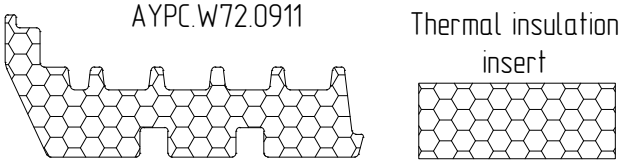

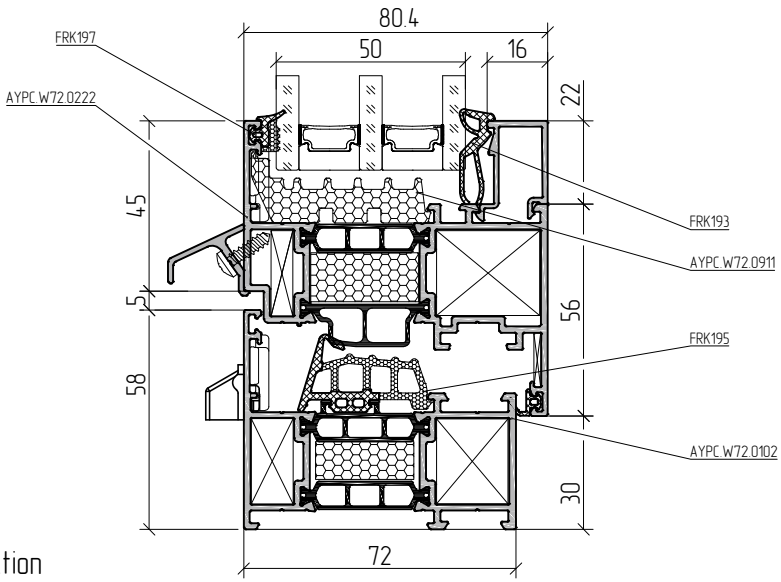

Option 2

FRK29-01 FRK170

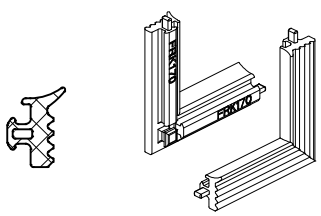

FRK195 FRK191 FRK192

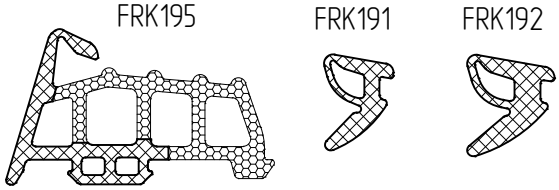

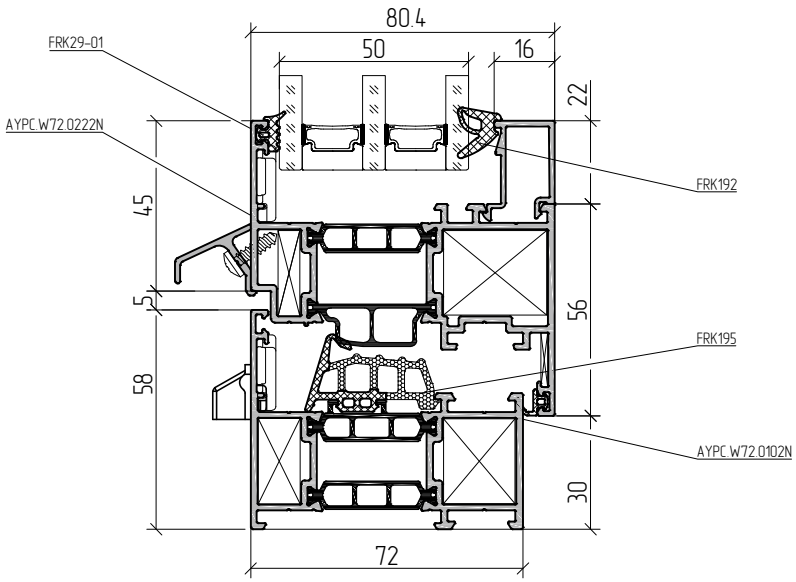

The U-value calculation of AYPC.W72 profiles in Flixo pro 7 (7.0.628.1 complex with foamed insert in the seam area and thermal insulation inserts, FRK195 central gasket.
Option 1. Joint solution: AYPC.W72.0102 frame profile / AYPC.W72.0222 sash profile

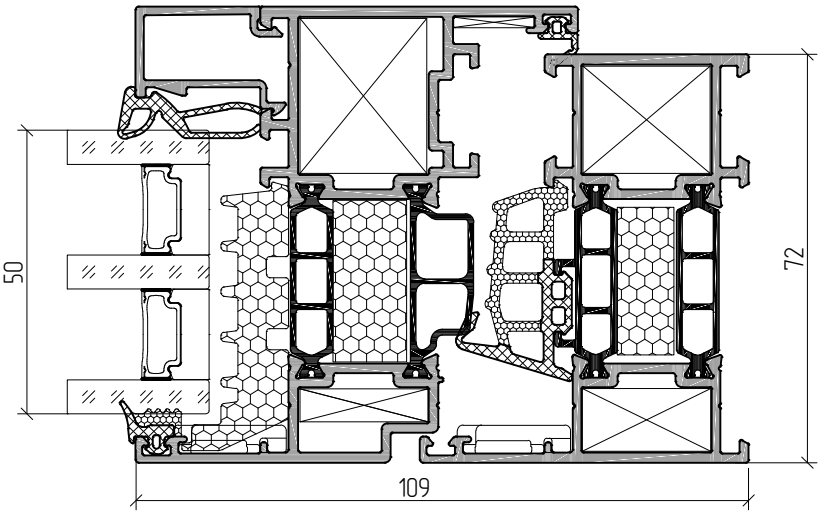

$$U_f = \frac{\frac{\Phi}{\Delta T} - U_p \cdot b_p}{b_f} = \frac{\frac{6{,}664}{20{,}000} - 0{,}626 \cdot 0{,}237}{0{,}108} = 1{,}71\ W/(m^2 \cdot K)$$

The U-value calculation of AYPC.W72 profiles in Flixo pro 7 (7.0.628.1 without foamed insert in the seam area and thermal insulation inserts inside of the profile, FRK195 central gasket.
Option 2. Joint solution: AYPC.W72.0102N frame profile / AYPC.W72.0222N sash profile

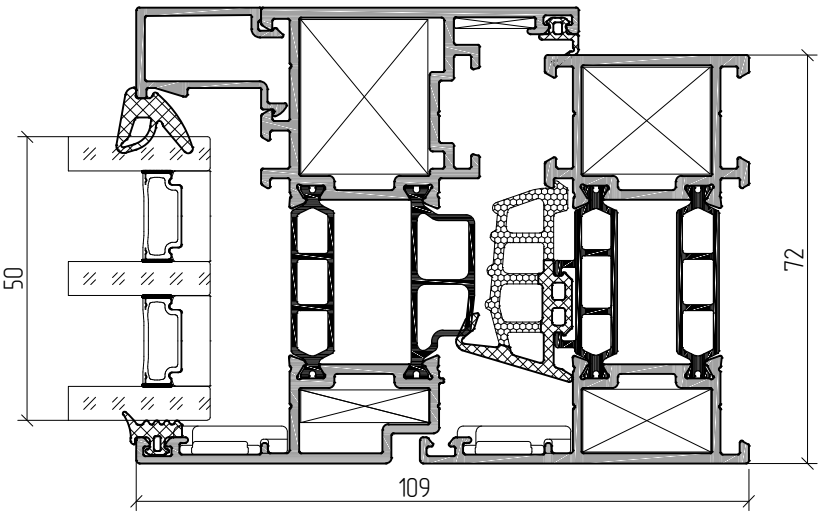

$$U_{f\,A,B} = \frac{\frac{\Phi}{\Delta T} - U_p \cdot b_p}{b_f} = \frac{\frac{7{,}952}{20{,}000} - 0{,}626 \cdot 0{,}237}{0{,}108} = 2{,}31\ W/(m^2 \cdot K)$$

ALUTECH PROFILE SYSTEMS

Scale 1:2

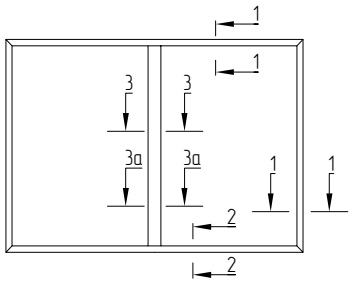

1–1

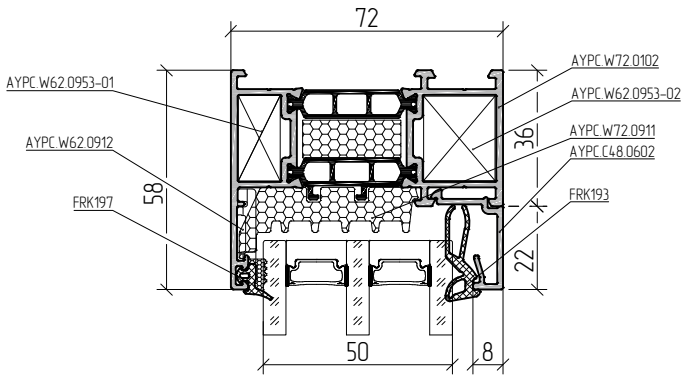

2–2

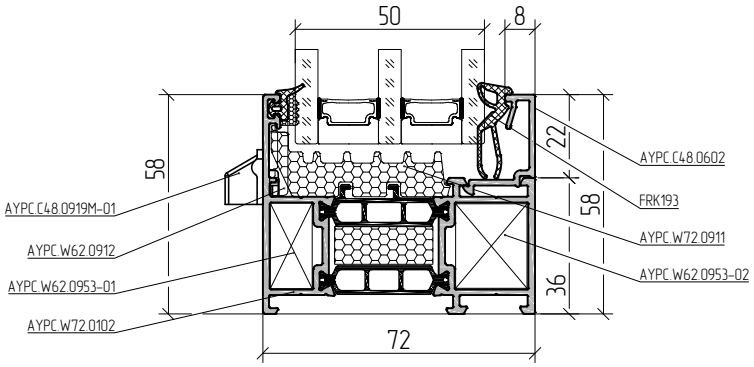

3–3

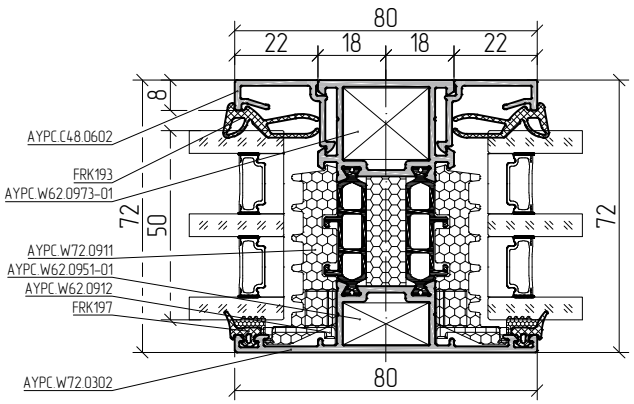

3a–3a

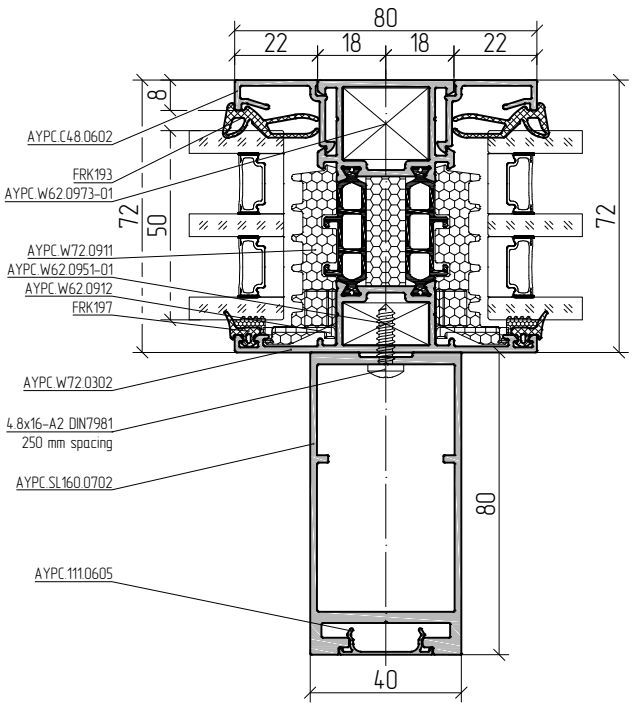

Scale 1:2

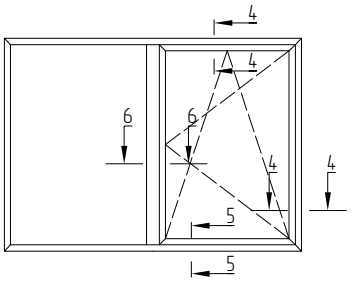

4–4

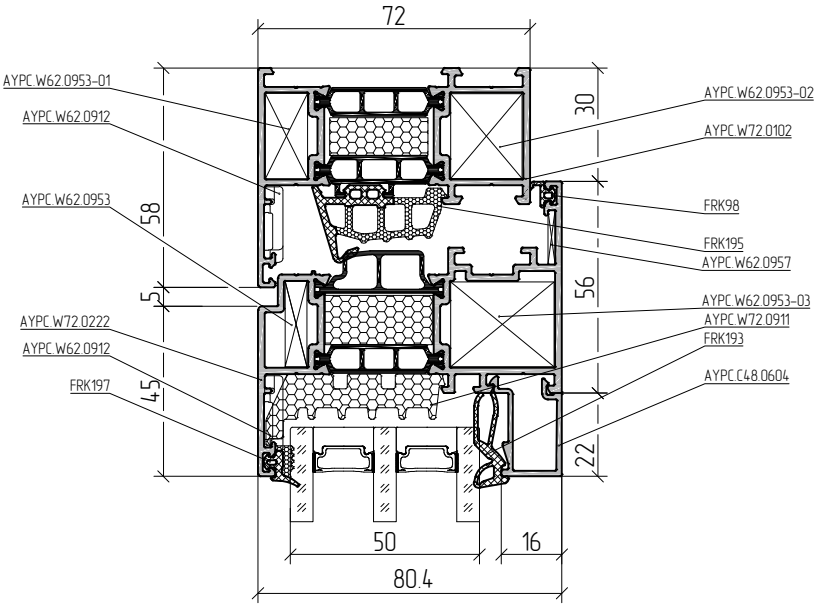

5–5

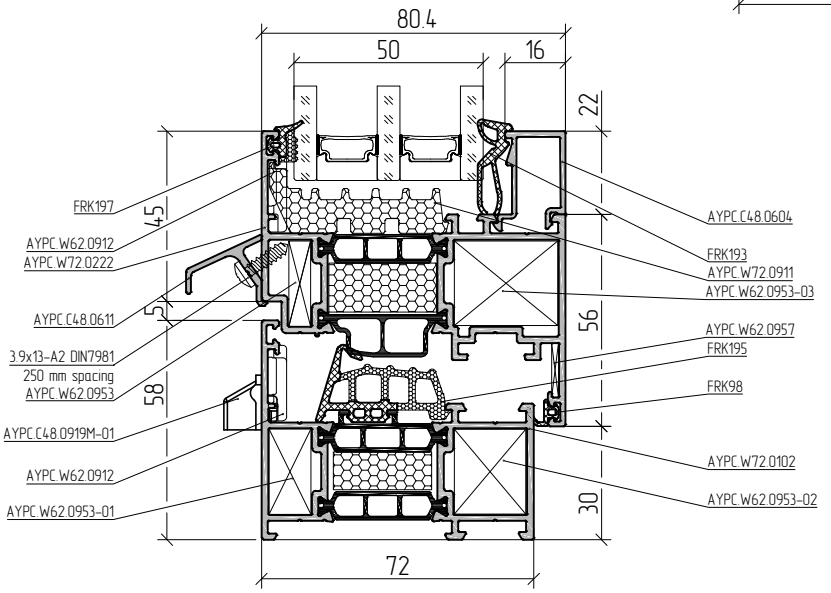

6–6

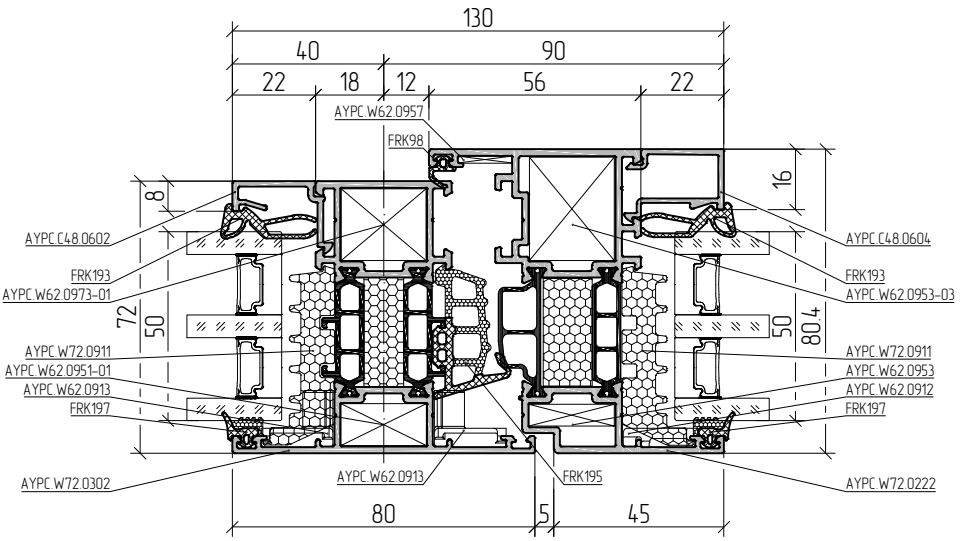

Scale 1:2

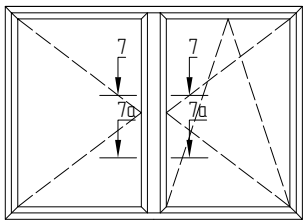

7–7

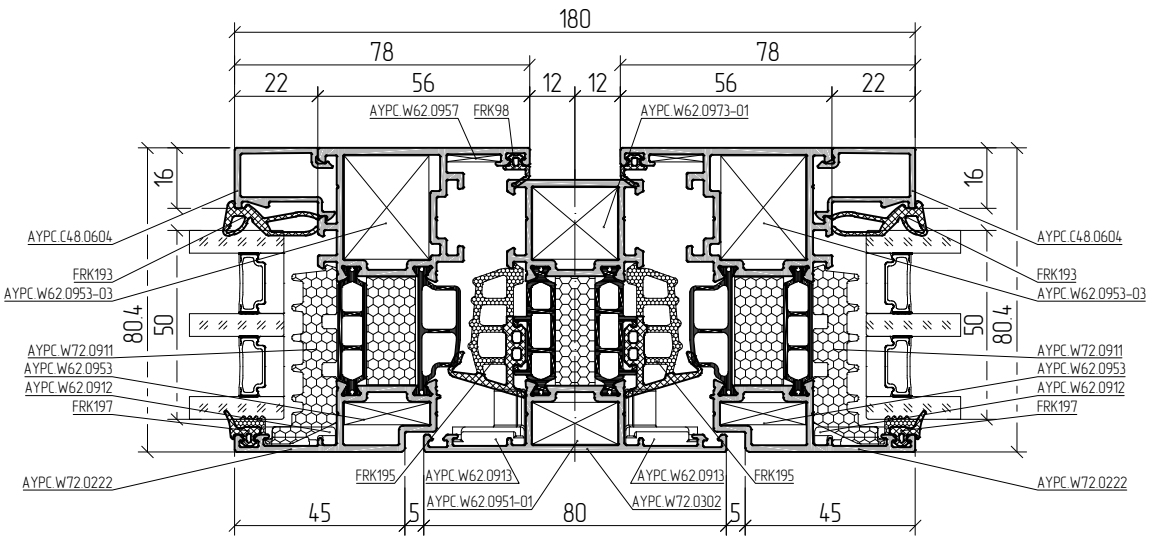

7a–7a

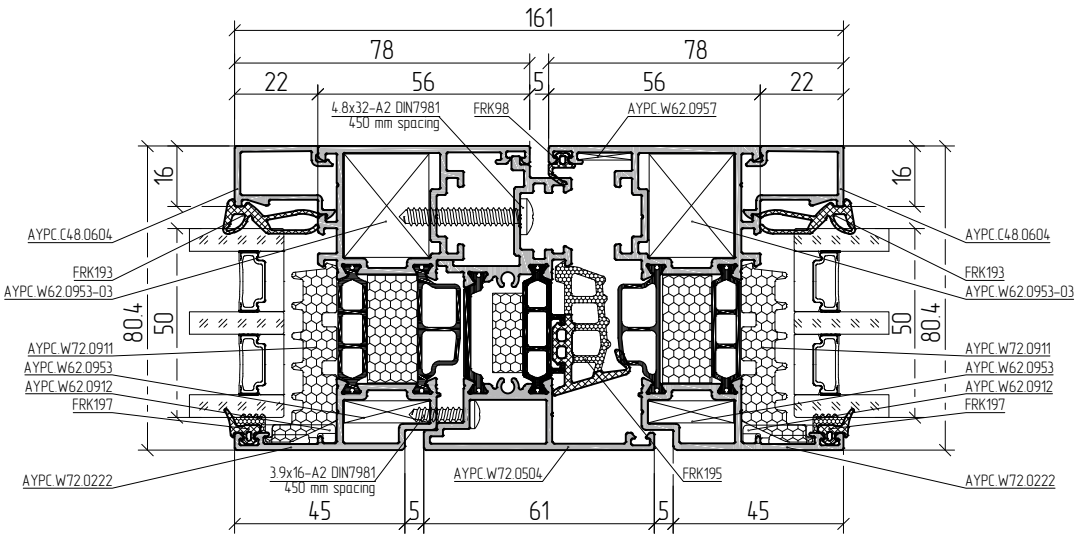

Scale 1:2

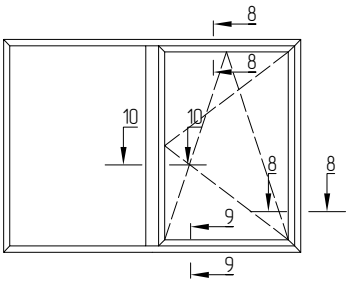

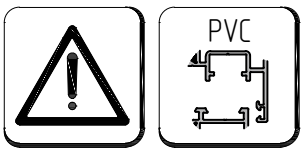

8–8

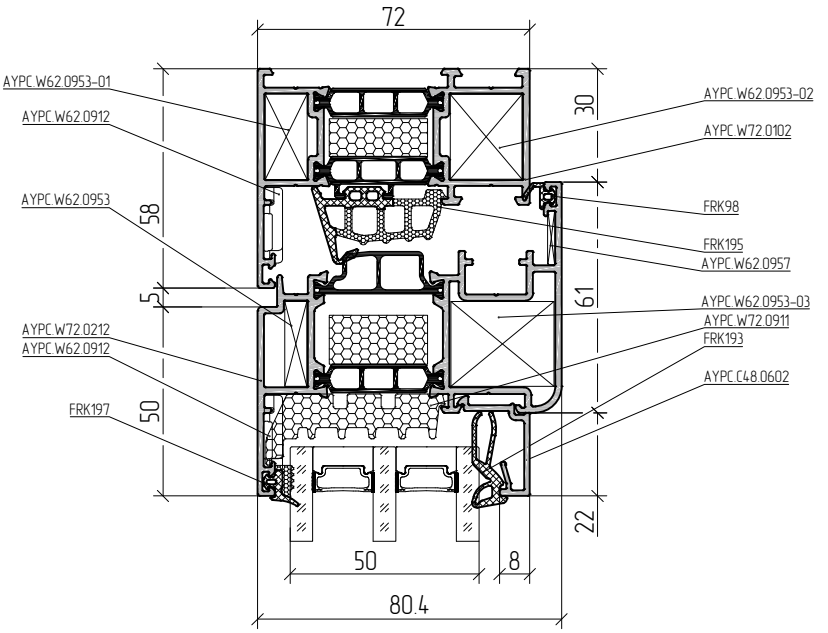

9–9

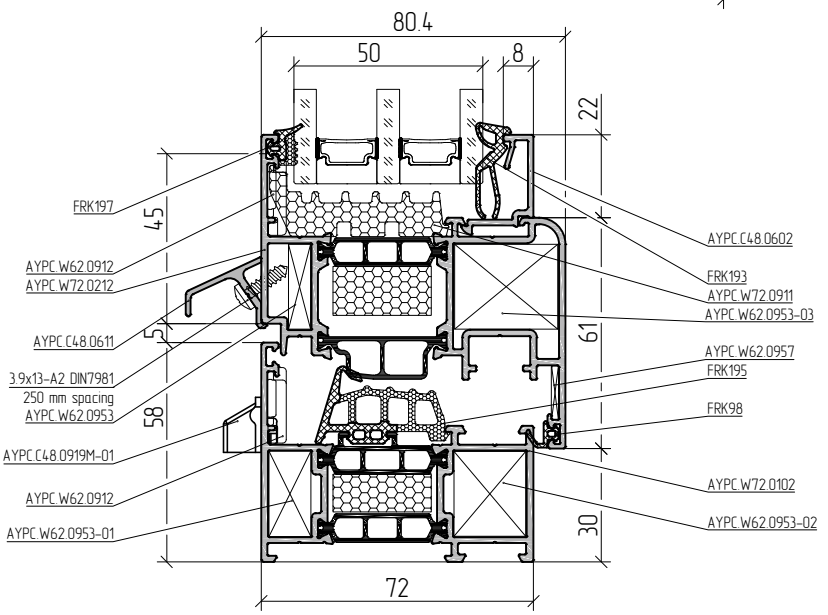

10–10

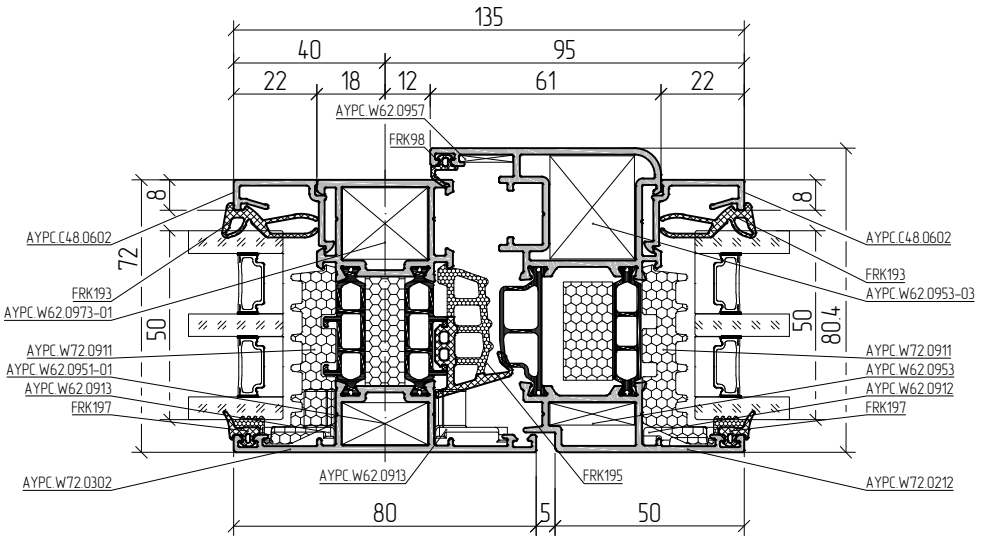

Scale 1:2

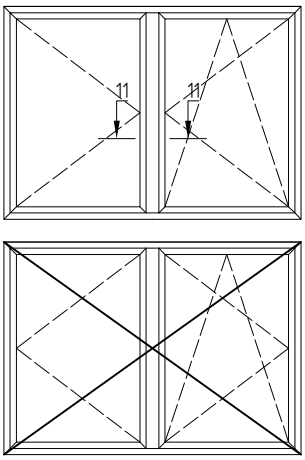

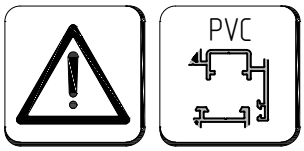

11–11

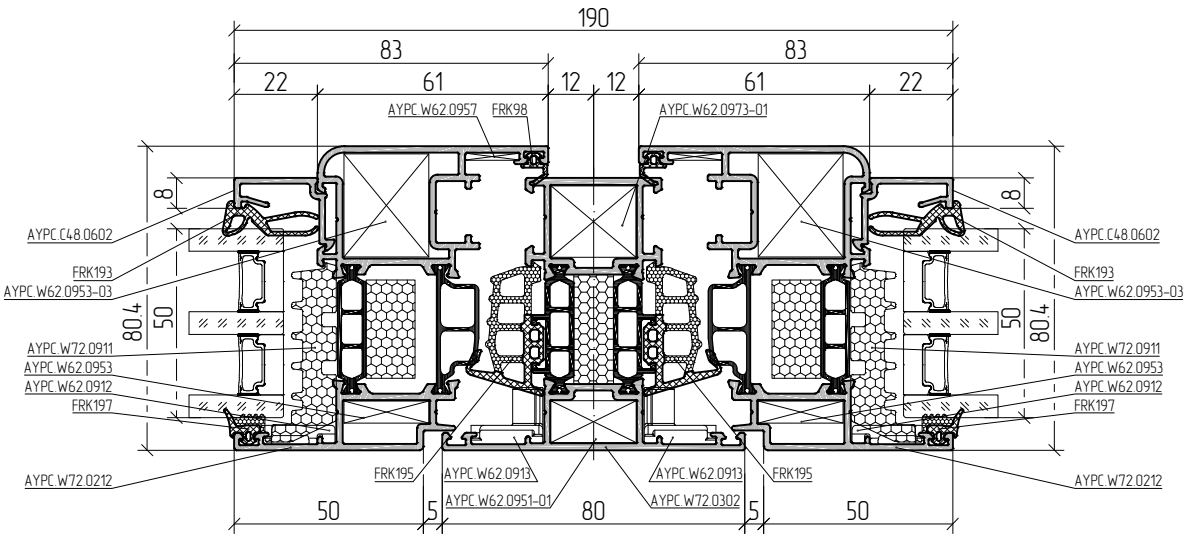

Scale 1:2

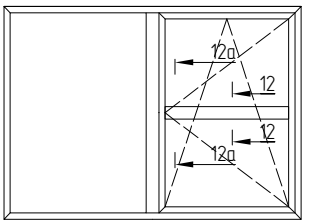

Correspondence table of transom bar profile to sash profile	
Transom bar profile	Sash profile
AYPC.W72.0301, AYPC.W72.0302, AYPC.W72.0303	AYPC.W72.0201, AYPC.W72.0202, AYPC.W72.0203, AYPC.W72.0212
AYPC.W72.0321	AYPC.W72.0221, AYPC.W72.0222, AYPC.W72.0223

01.07.24

12–12

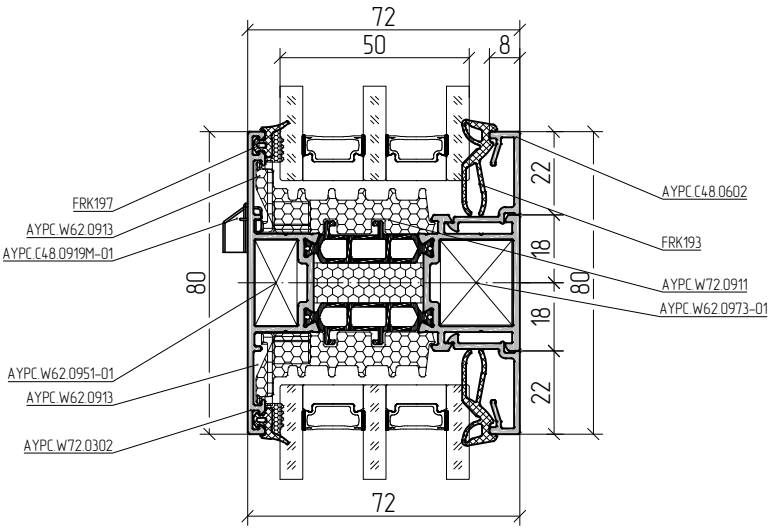

01.07.24

12a–12a

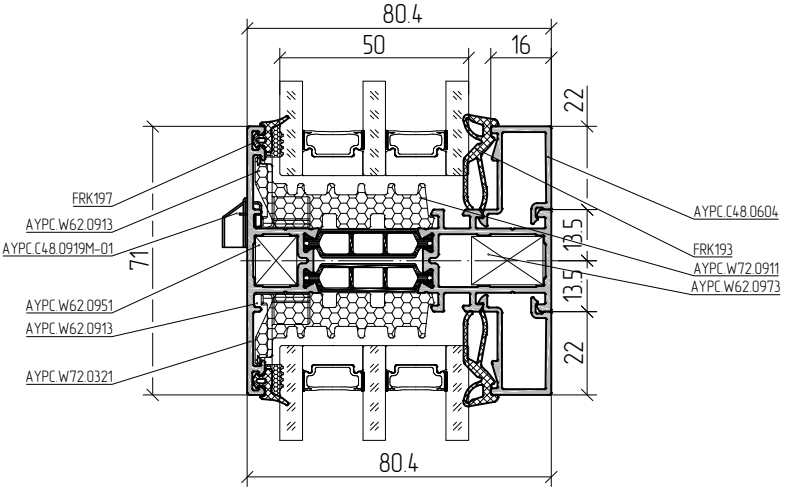

Scale 1:2

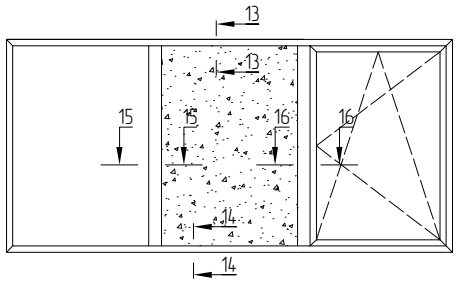

13–13

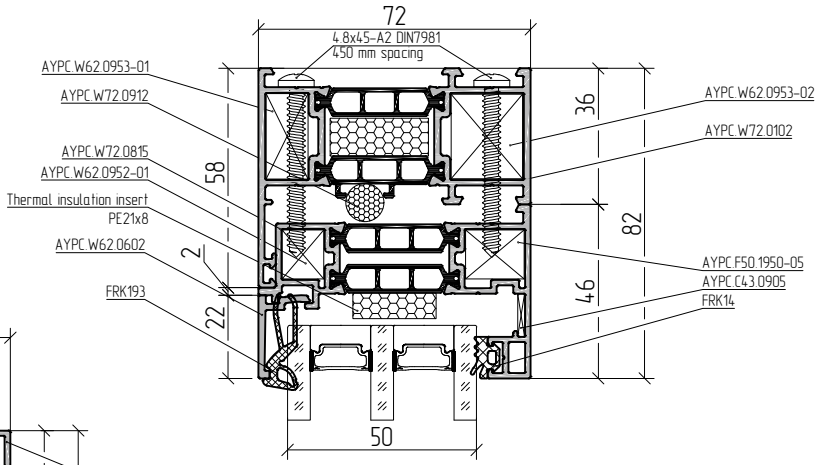

14–14

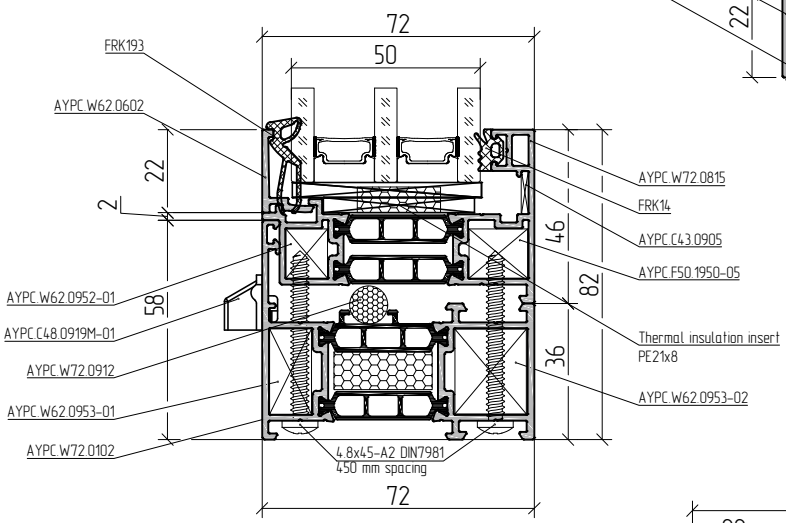

15–15

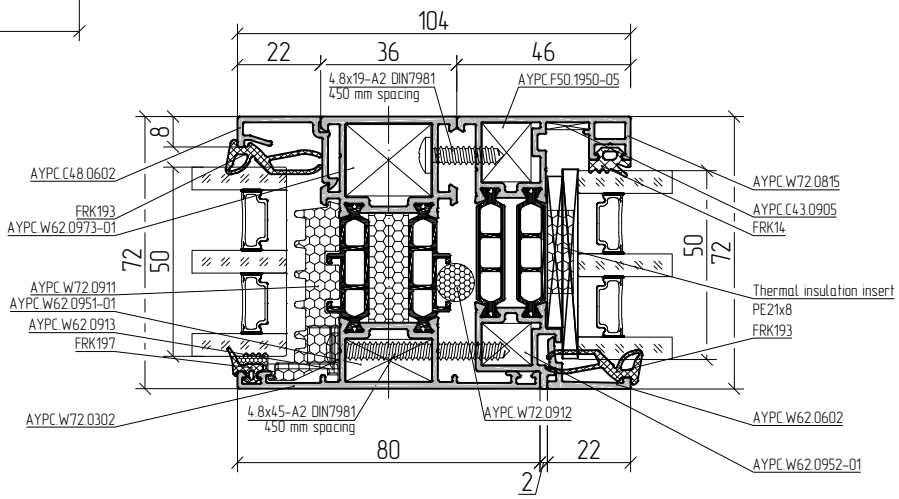

16–16

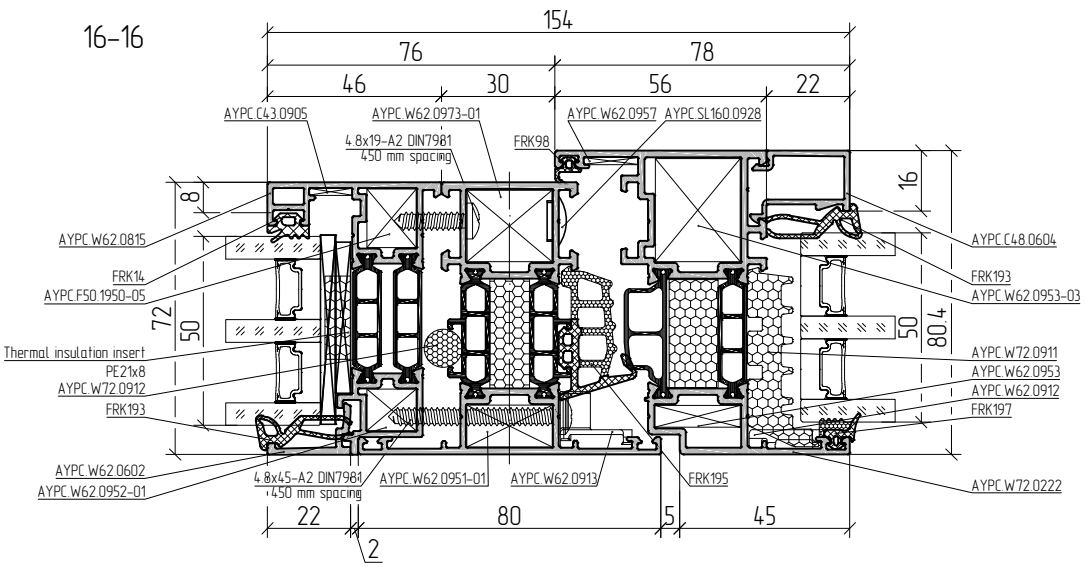

Scale 1:2

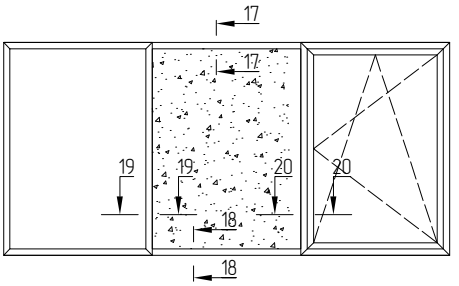

17–17

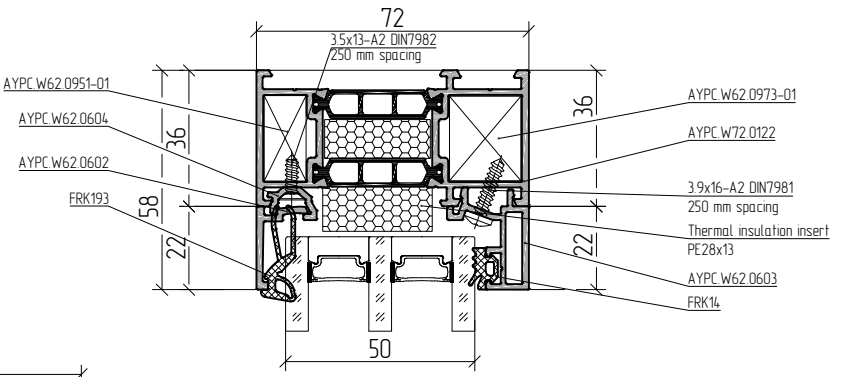

18–18

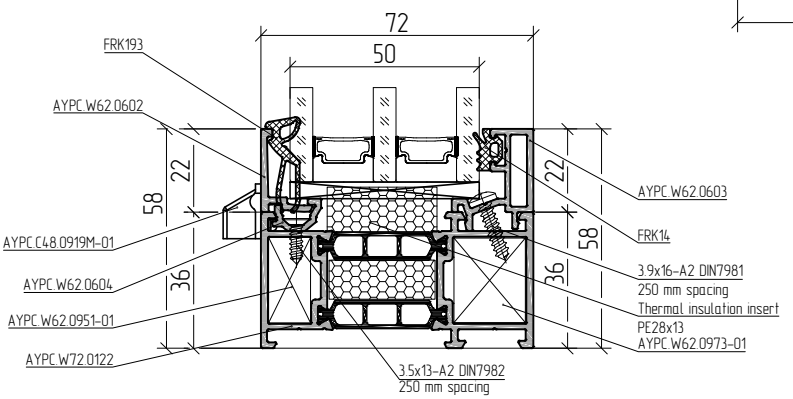

19–19

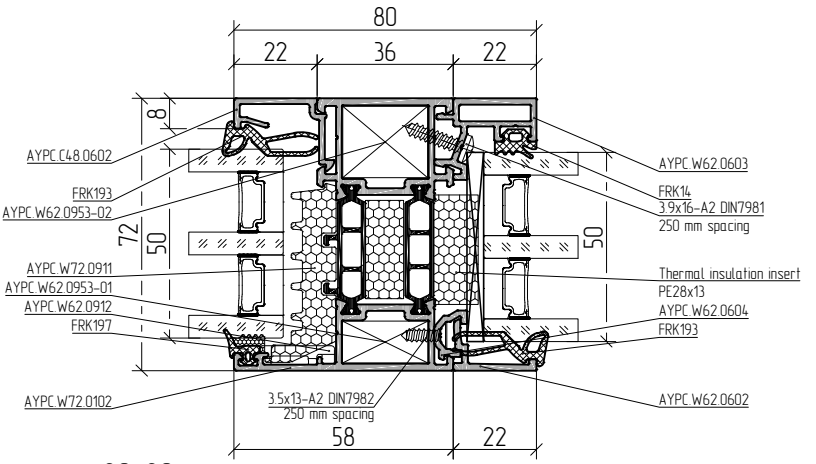

20–20

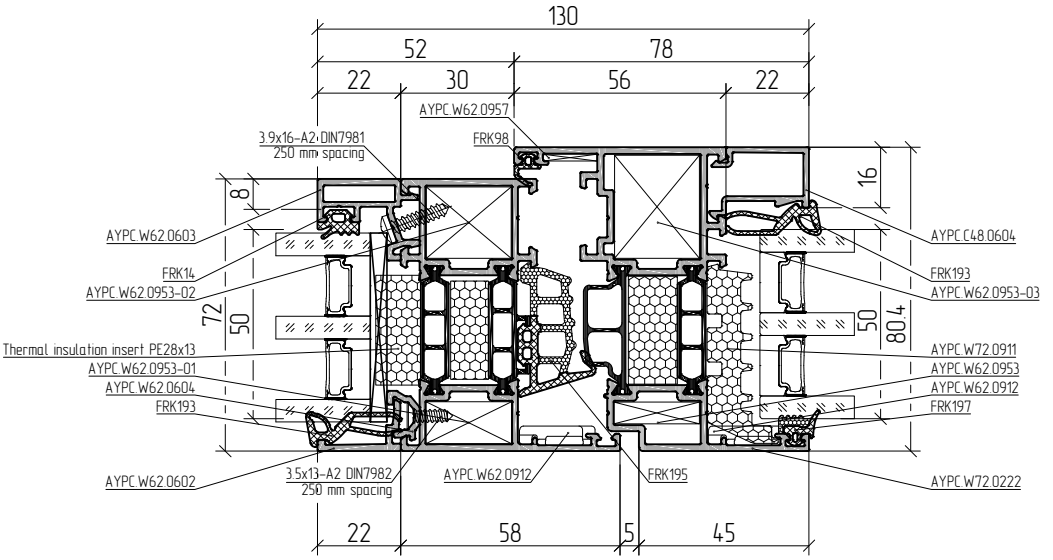

Scale 1:2

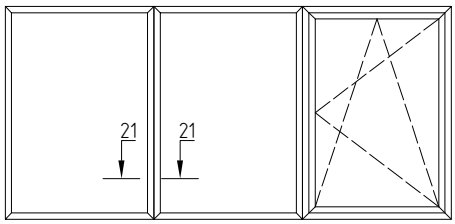

21–21

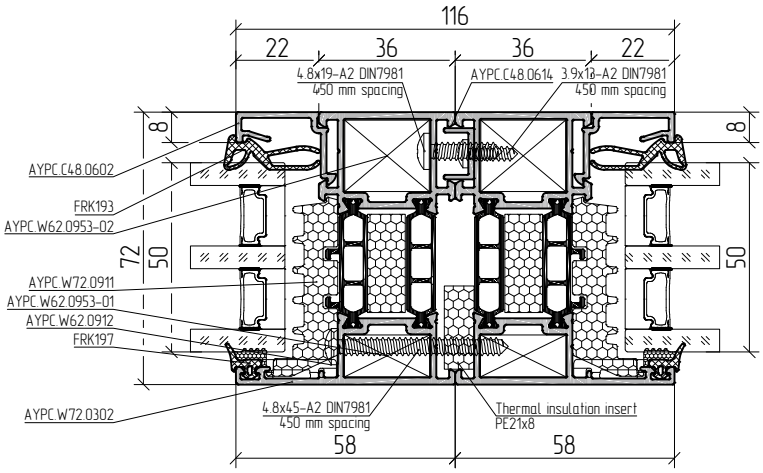

22–22

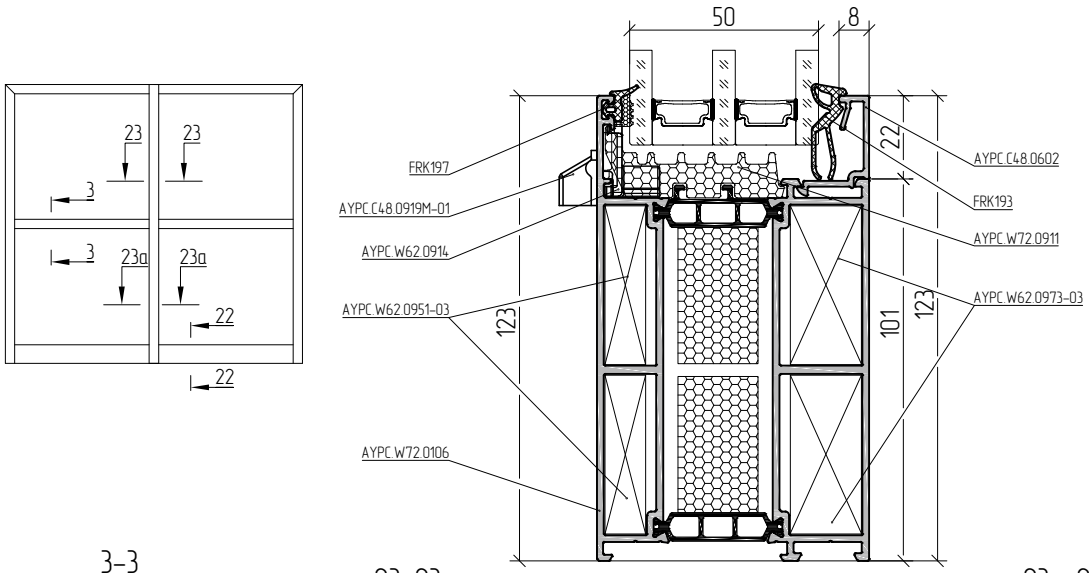

3–3

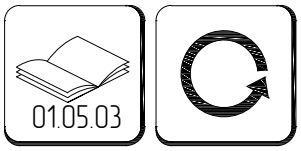

23–23

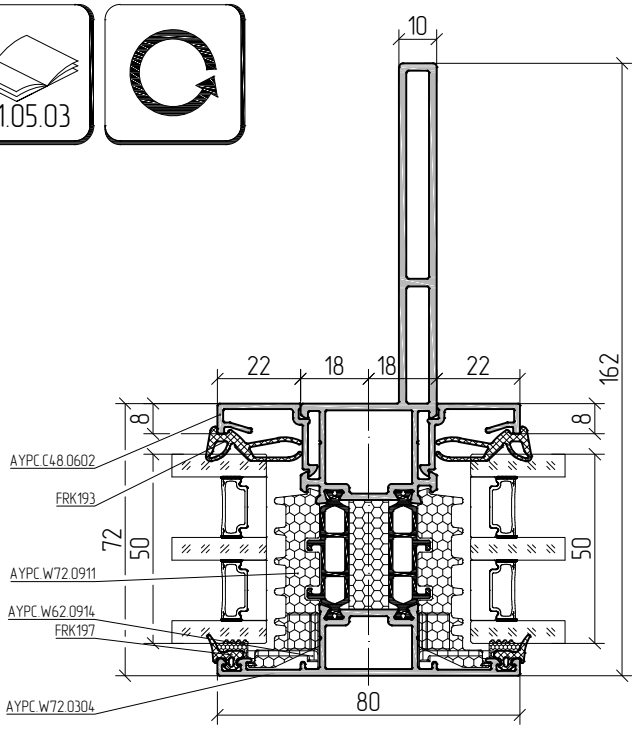

23a–23a

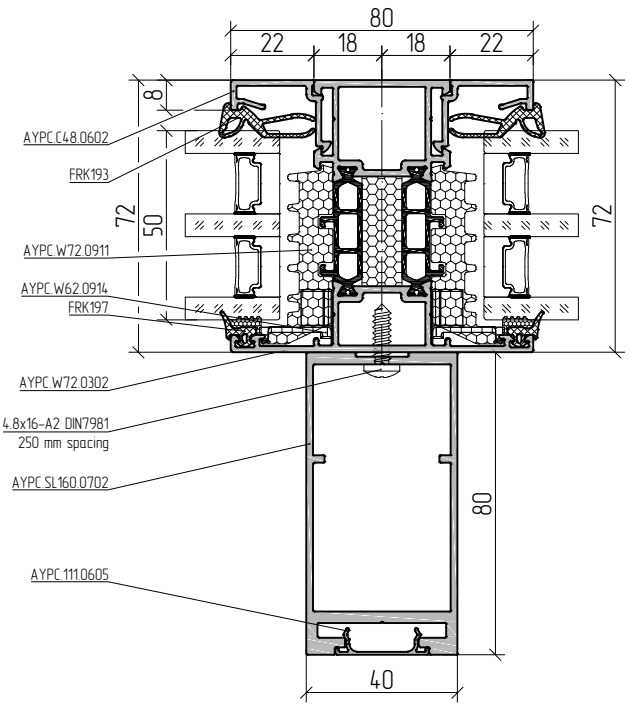

Scale 1:2

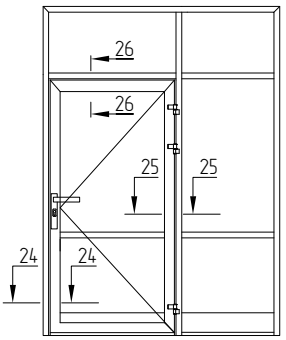

24–24

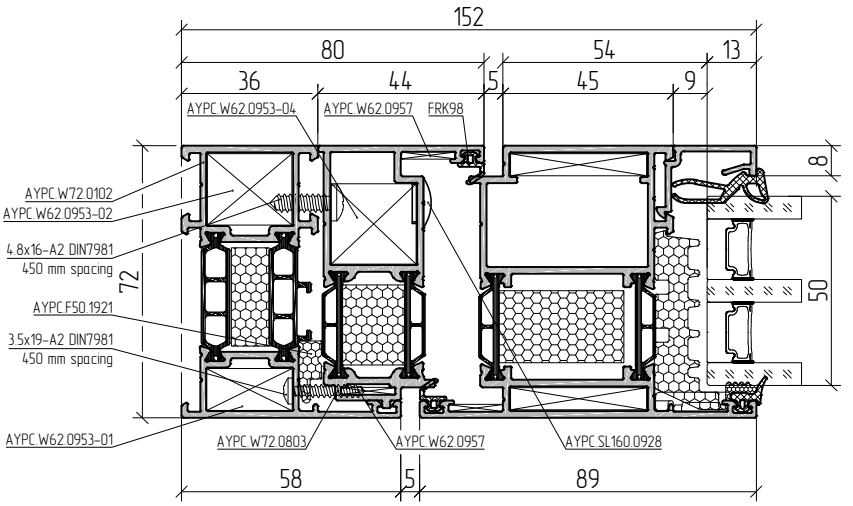

25–25

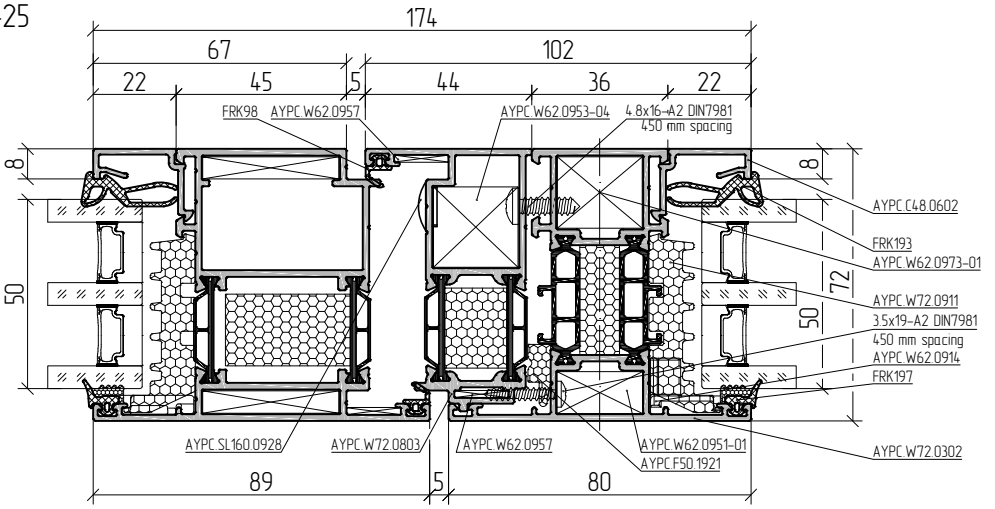

26–26

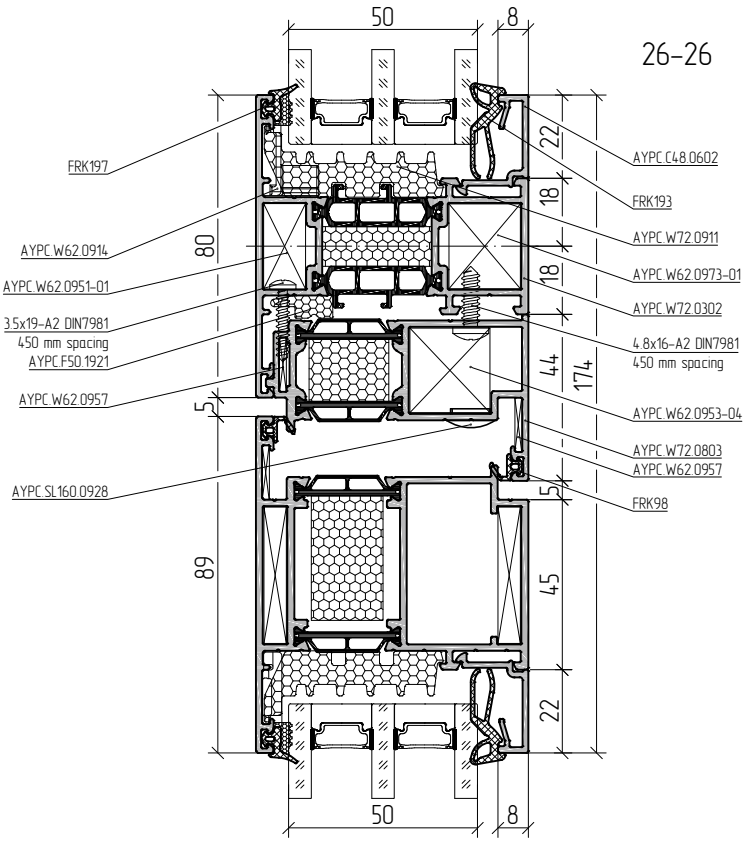

ALUTECH PROFILE SYSTEMS

Scale 1:2

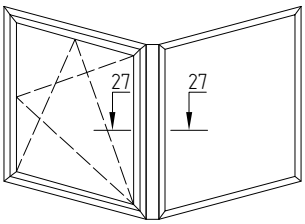

27–27

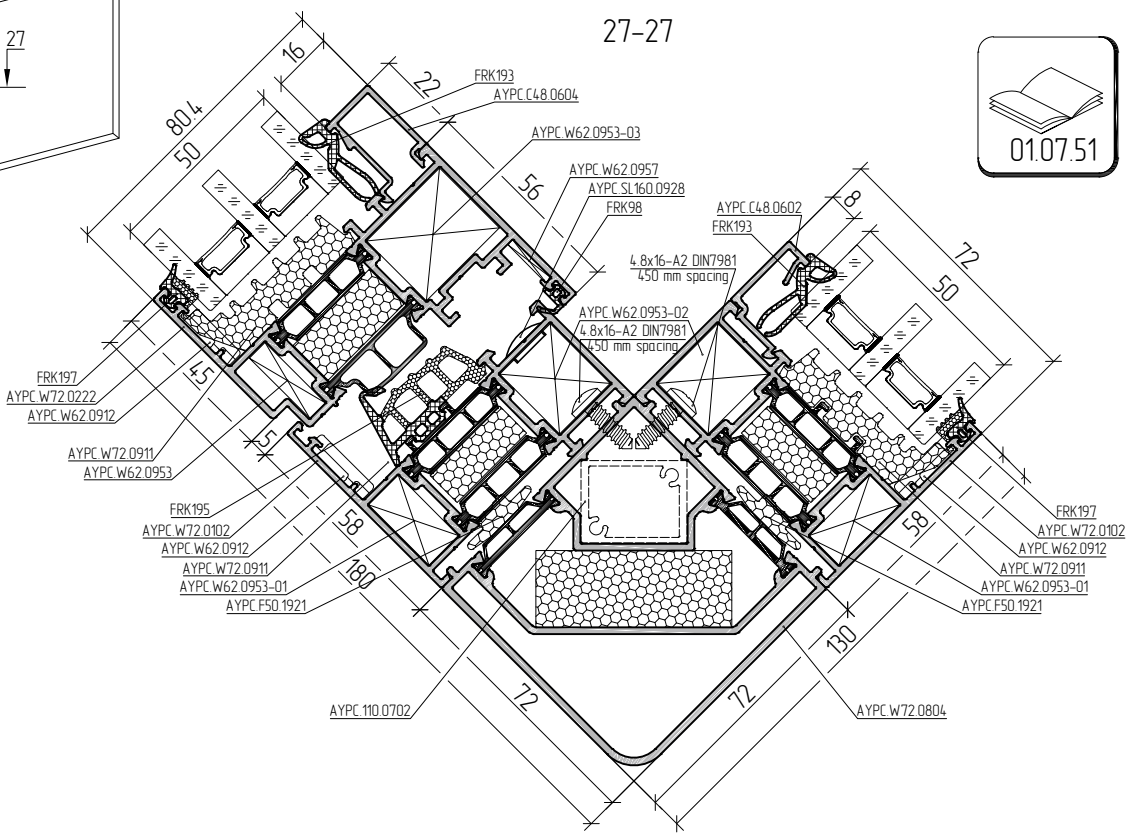

01.07.51

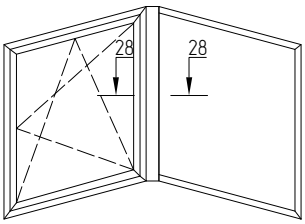

28–28

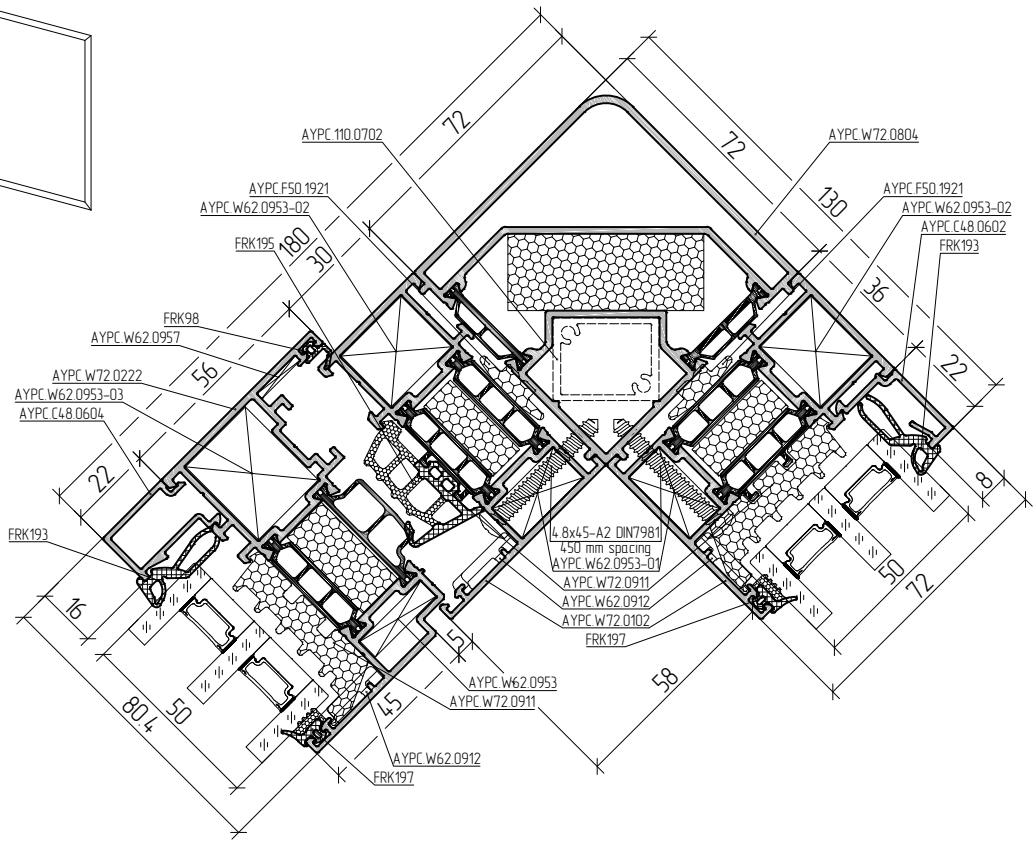

Scale 1:2

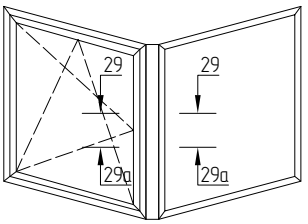

01.07.51

29–29

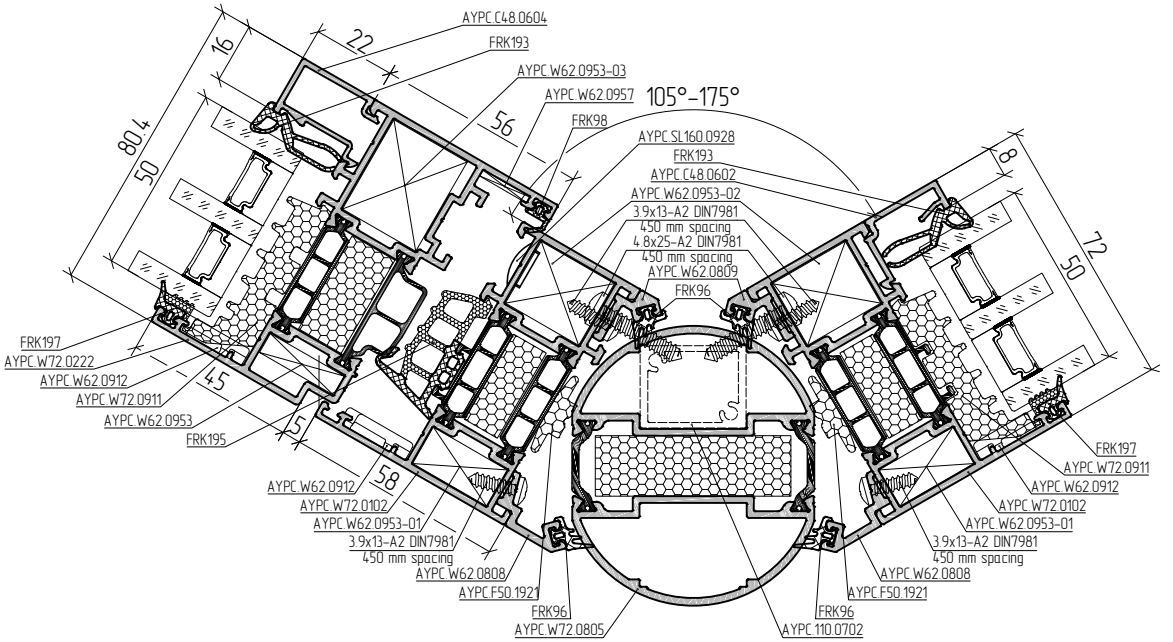

29a–29a

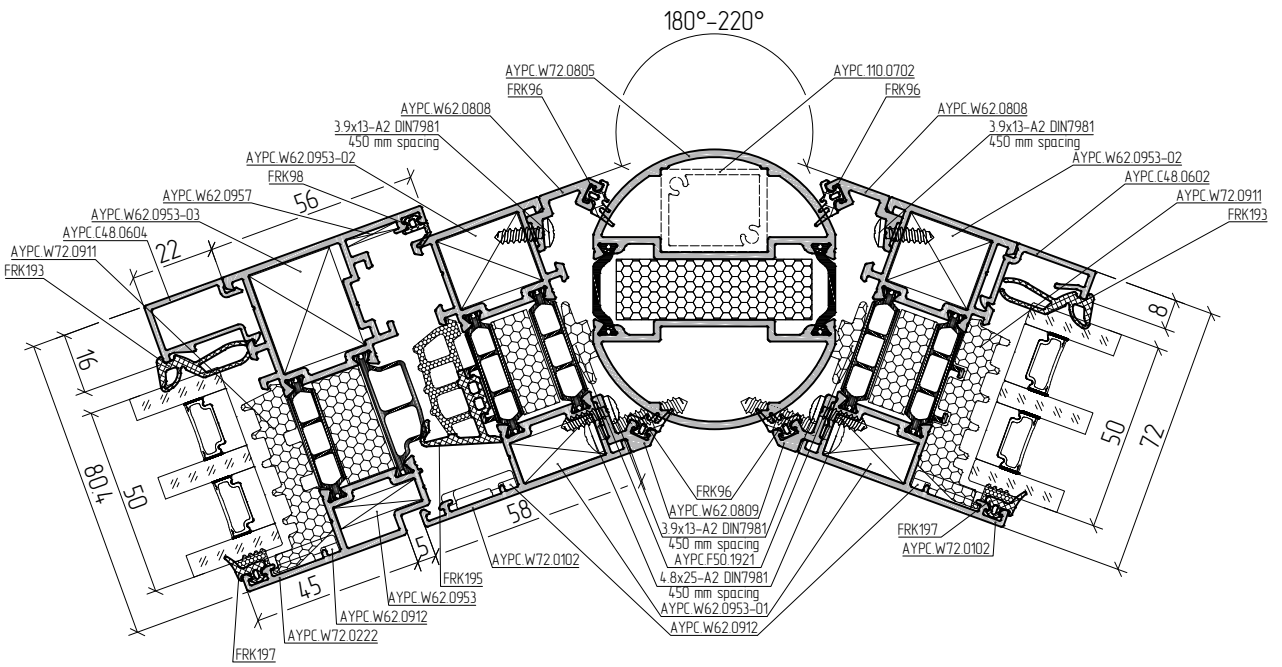

Scale 1:2

Type "A"

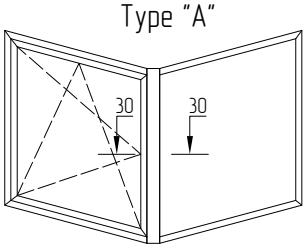

30–30
(31–31)

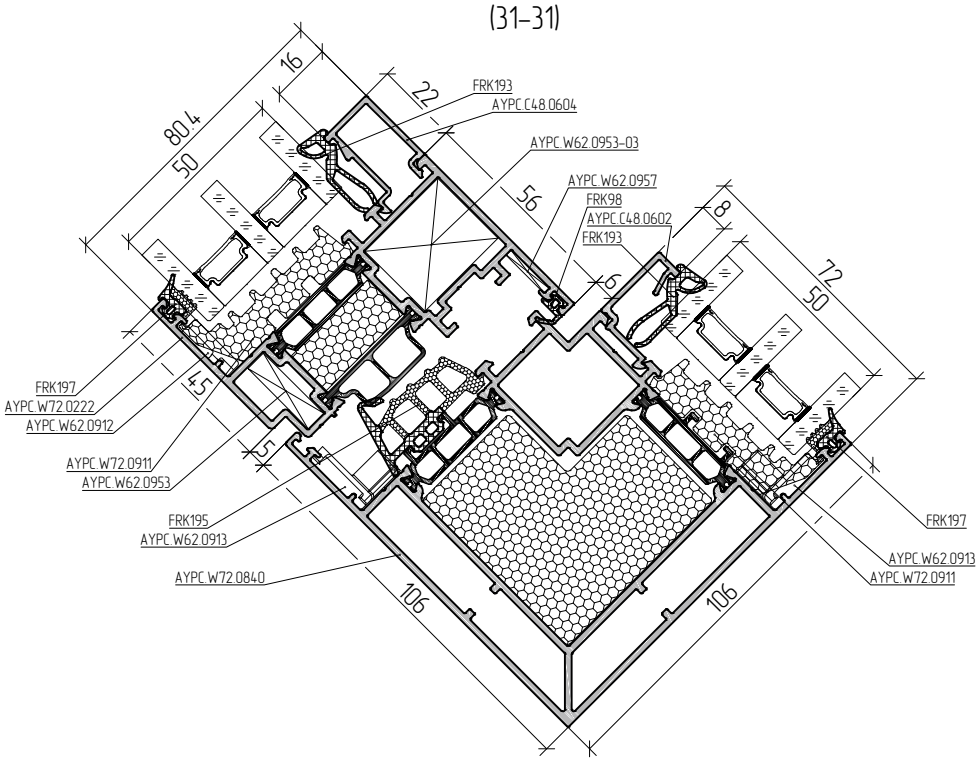

Type "B"

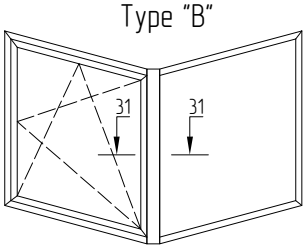

Type B installation is only acceptable for concealed hinges.

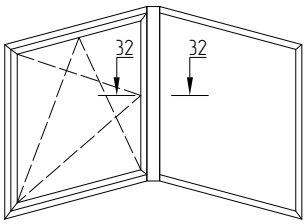

32–32

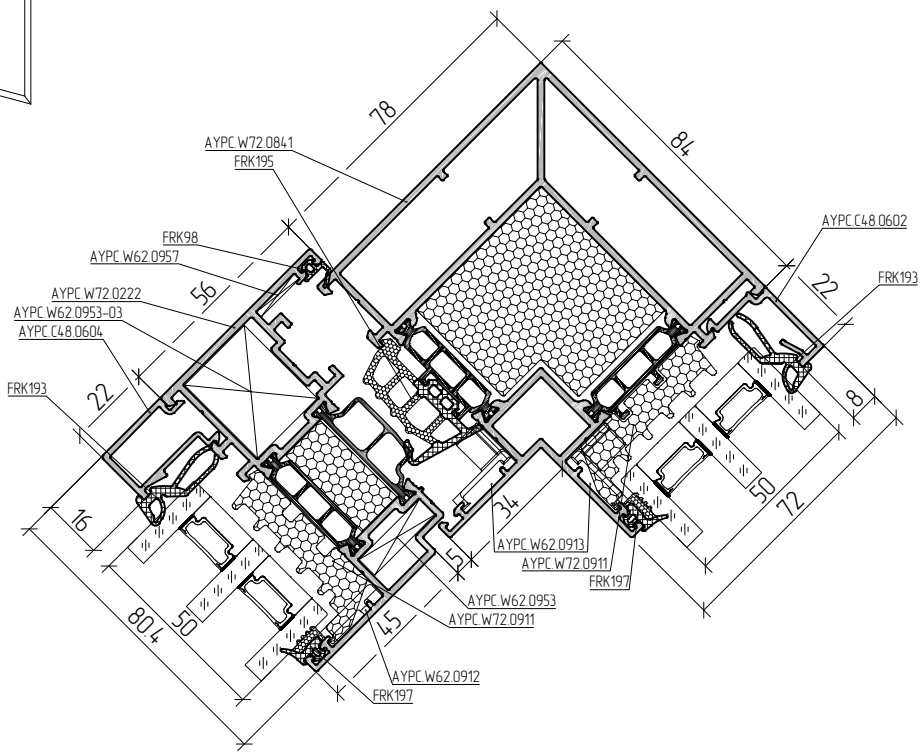

Scale 1:2

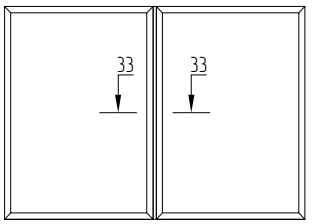

01.07.51

33–33

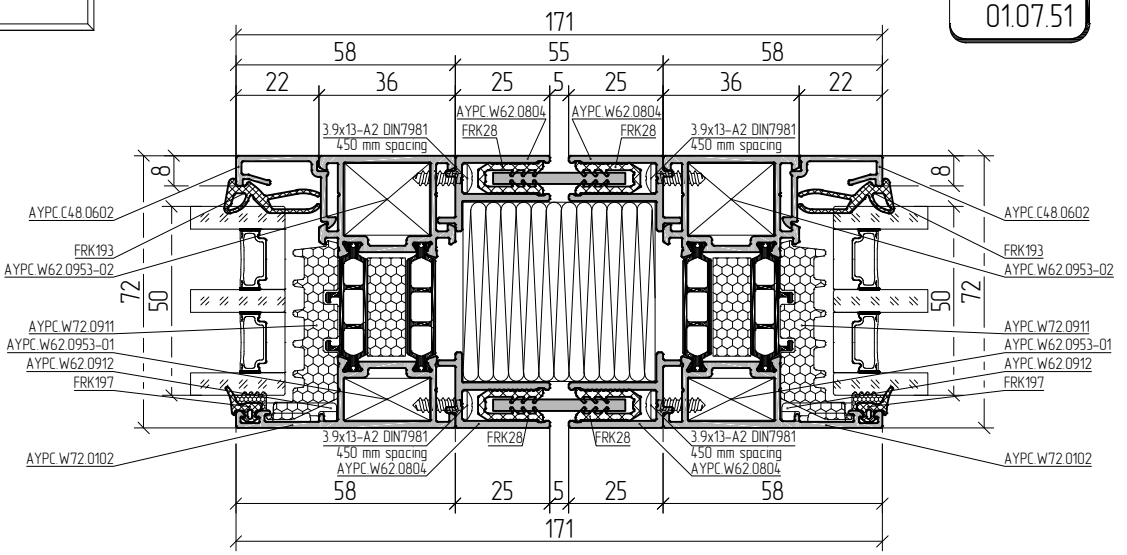

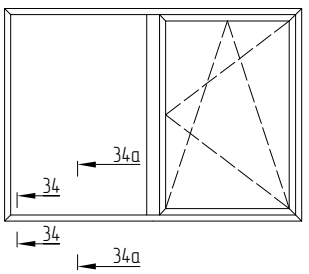

34–34

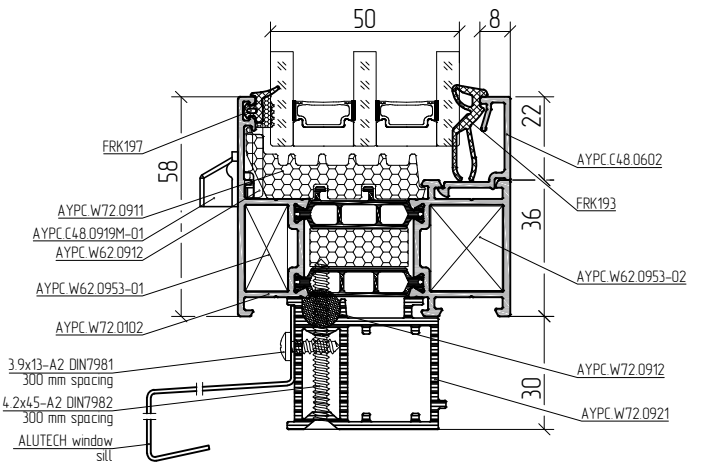

34a–34a

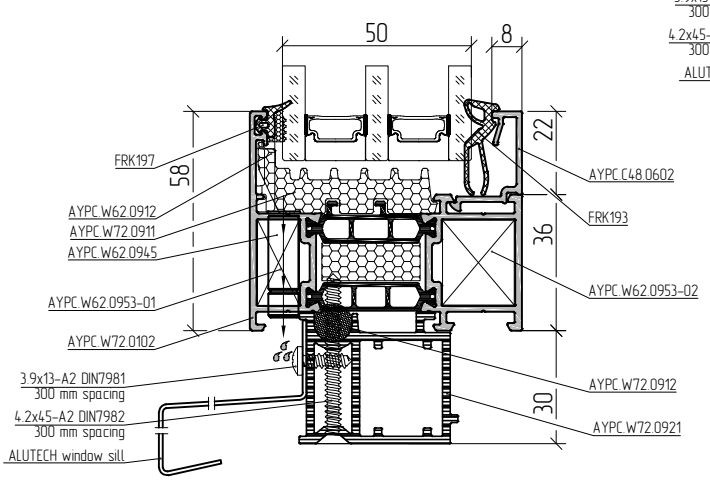

Scale 1:2

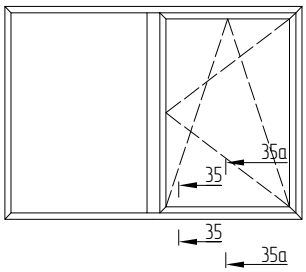

35–35

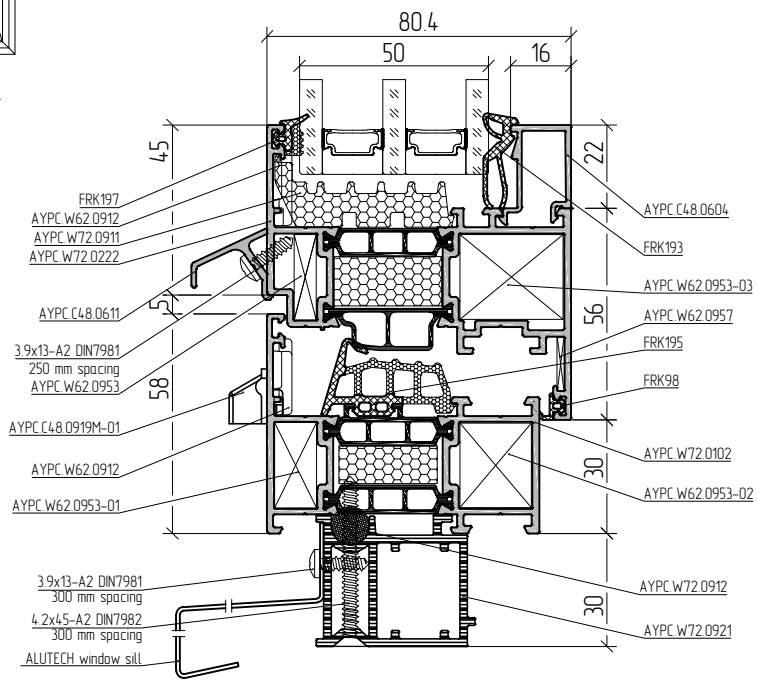

35a–35a

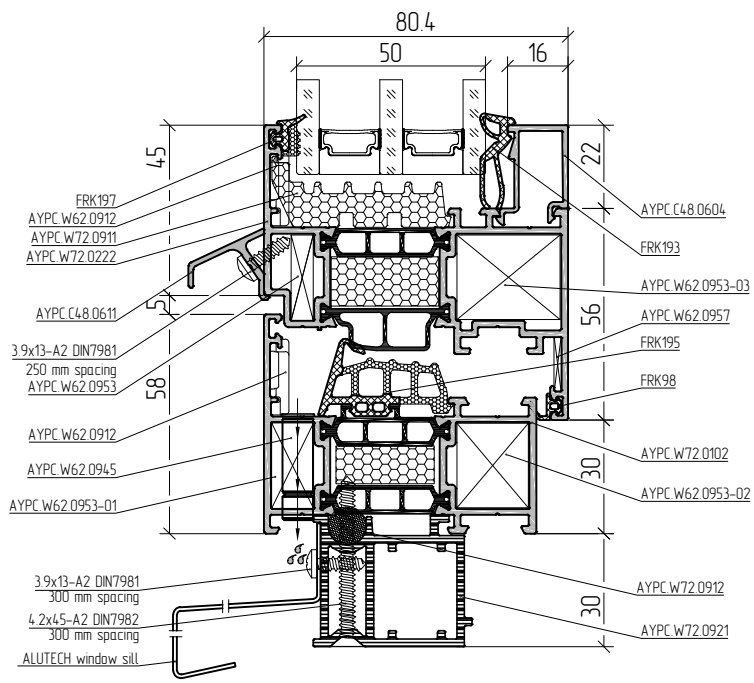

Example of tilt and turn window calculation

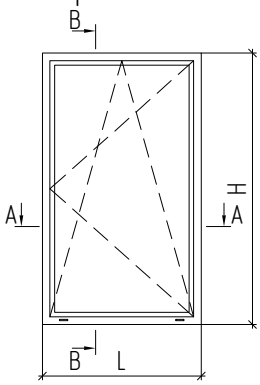

B–B

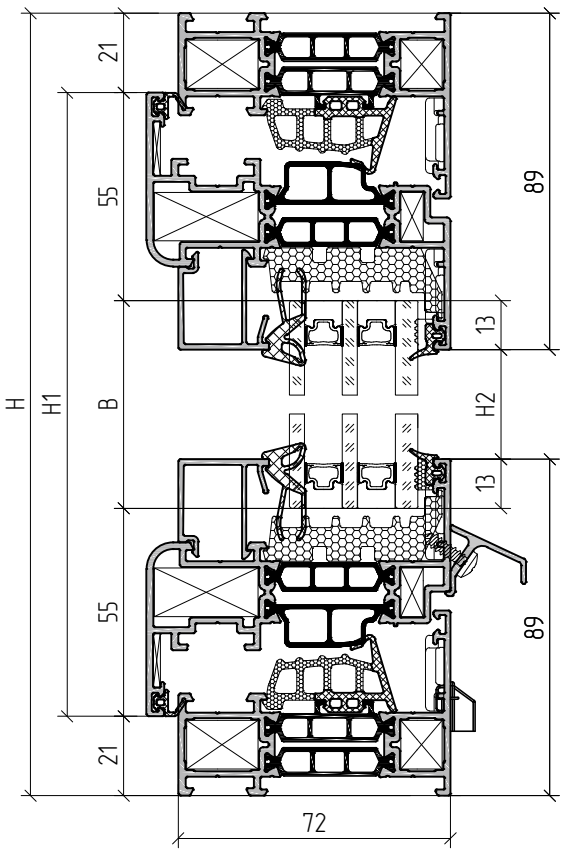

A–A

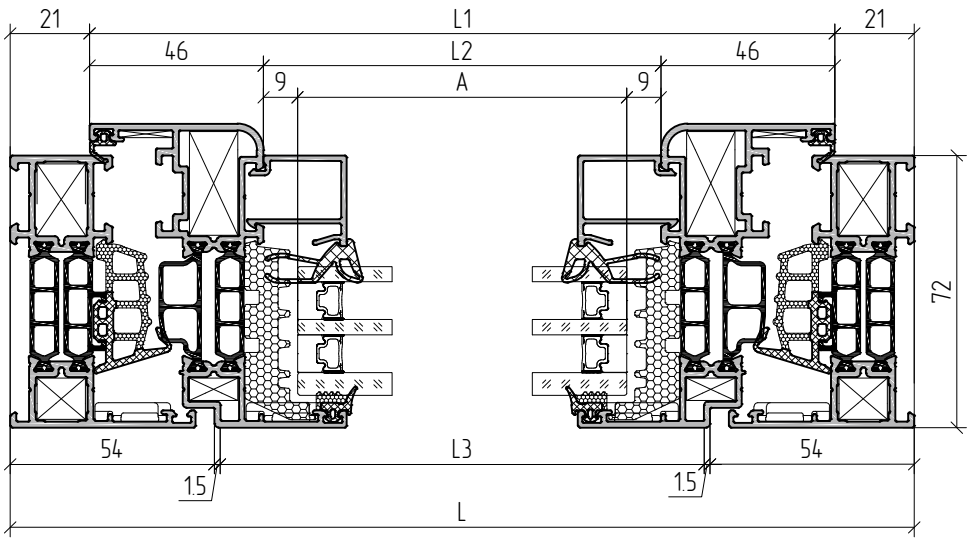

Example of tilt and turn window calculation

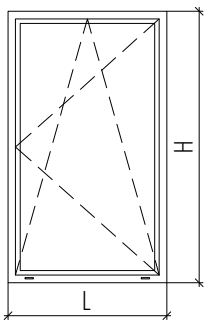

Article	Name Image	45°	L	1....
Profile				
AYPC.W72.0101	Frame profile 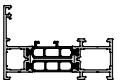		L	2
			H	2
AYPC.W72.0201	Sash profile 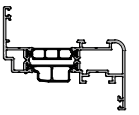		L1=L-42	2
			H1=H-42	2
AYPC.C48.0611	Drip bar		L3=L-111	1
AYPC.C48.0612 (AYPC.W62.0607)	Rod profile		-	
AYPC.C48.0606	Glass bead profile		L2=L1-92	2
			H2=H1-136	2

Article	Name	Image	1....
Accessories			
AYPC.W62.0917	Bearing support		6
100x44x1(3)	Leveling support		6 (6)
AYPC.C48.0919M-01	Drip bar		2
AYPC.W62.0999	Kit of drip bar end plugs		1
AYPC.W62.0952-01	Clamping corner		4
AYPC.W62.0952-02	Clamping corner		4
AYPC.W62.0912	Plastic corner		8
Pin 5x10	Pin 5x10 DIN6325D		32
AYPC.W62.0957	Leveling corner		4
AYPC.W62.0952	Clamping corner		4
AYPC.W62.0952-03	Clamping corner		4
3.9x13-A2 DIN7981	Self-tapping screw		L3/250

Article	Name	Image	L	1....
Gaskets				
FRK98	Rubber gasket		L1x2+H1x2	1
FRK195	Rubber gasket		L1x2+H1x2	1
FRK196	Rubber corner			4
* FRK193	Rubber gasket		Ax2+Bx2	1
* AYPC.W72.0911	Seam sealing		Ax2+Bx2-6x100**	1
* FRK197	Rubber gasket		Ax2+Bx2	1
* FRK179	Rubber corner			4
*** FRK101	Rubber gasket		L1x2+H1x2	1
34 mm infill unit				
A=L1-110; B=H1-110				1

1. Select articles of glass bead profiles and gaskets depending on infill unit thickness (see section 01.04 – Table of glazing).
2. The dimensions and quantities of AYPC.C48.0612 (AYPC.W62.0607) rod profile are determined by the type of hardware and sash dimensions (L1 and H1).

* Other accessories are possible (see section 01.05 – Sections and junctions).
** The quantity of removed AYPC.W72.0911 seam sealing depends on the type of opening and quantity of bearing supports.
*** See section 01.07 – Profiles machining and assembly (page 01.07.15 and page 01.07.40)

Example of combined window calculation

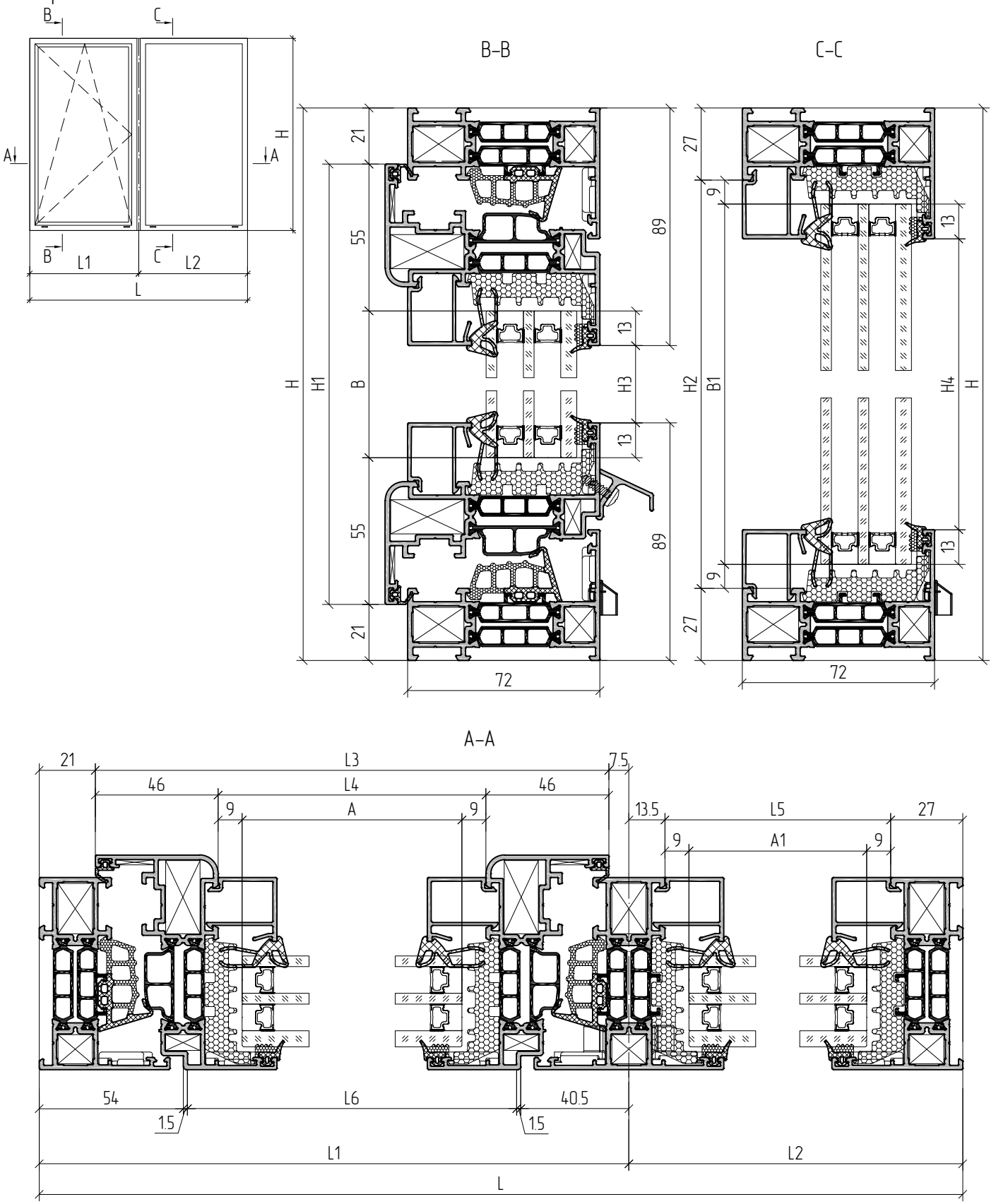

Example of combined window calculation

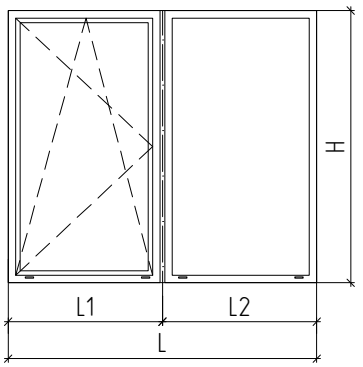

Article	Name Image	45°	L	1....
Profile				
AYPC.W72.0101	Frame profile 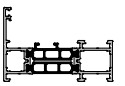		L	2
			H	2
AYPC.W72.0201	Sash profile 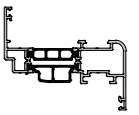		L3=L1-28,5	2
			H1=H-42	2
AYPC.W72.0301	Transom bar profile 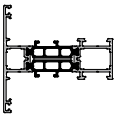		H2=H-54	1
AYPC.C48.0611	Drip bar		L6=L1-97,5	1
AYPC.C48.0612 (AYPC.W62.0607)	Rod profile		-	1
AYPC.C48.0606	Glass bead profile		L4=L3-92	2
			H3=H1-136	2
			L5=L2-40,5	2
			H4=H-98	2

Article	Name	Image	1....
Accessories			
AYPC.W62.0917	Bearing support		10
100x44x1(3)	Leveling support		10 (10)
AYPC.C48.0919M-01	Drip bar		4
AYPC.W62.0999	Kit of drip bar end plugs		1
AYPC.W62.0952-01	Clamping corner		4
AYPC.W62.0952-02	Clamping corner		4
AYPC.W62.0912	Plastic corner		8
Pin 5x10	Pin 5x10 DIN6325D		32
AYPC.W62.0957	Leveling corner		4
AYPC.W62.0952	Clamping corner		4
AYPC.W62.0952-03	Clamping corner		4
AYPC.W62.0973	Transom fixing element		2
AYPC.W62.0951	Transom fixing element		2
AYPC.W62.0916	Foamed support		2
AYPC.W62.0913	Plastic corner		4
3,9x13-A2 DIN7981	Self-tapping screw		L6/250

Article	Name	Image	L	1....
Gaskets				
FRK98	Rubber gasket		L3x2+H1x2	1
FRK195	Rubber gasket		L3x2+H1x2	1
FRK196	Rubber corner			4
* FRK193	Rubber gasket		(A+B)x2+(A1+B1)x2	1
* AYPC.W72.0911	Seam sealing		(A+B)x2+(A1+B1)x2-10x100**	1
* FRK197	Rubber gasket		(A+B)x2+(A1+B1)x2	1
* FRK179	Rubber corner			8
*** FRK101	Rubber gasket		L3x2+H1x2	1
34 mm infill unit				
A=L3-110; B=H1-110				1
A1=L2-58,5; B1=H-72				1

1. Select articles of glass bead profiles and gaskets depending on infill unit thickness (see section 01.04 – Table of glazing).
2. The dimensions and quantities of AYPC.C48.0612 (AYPC.W62.0607) rod profile are determined by the type of hardware and sash dimensions (L1 and H1).

* Other accessories are possible (see section 01.05 – Sections and junctions).
** The quantity of removed AYPC.W72.0911 seam sealing depends on the type of opening and quantity of bearing supports.
*** See section 01.07 – Profiles machining and assembly (page 01.07.15 and page 01.07.40)

ALUTECH PROFILE SYSTEMS

Example of combined window calculation

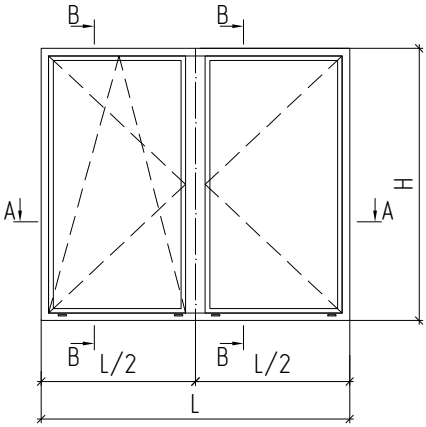

B–B

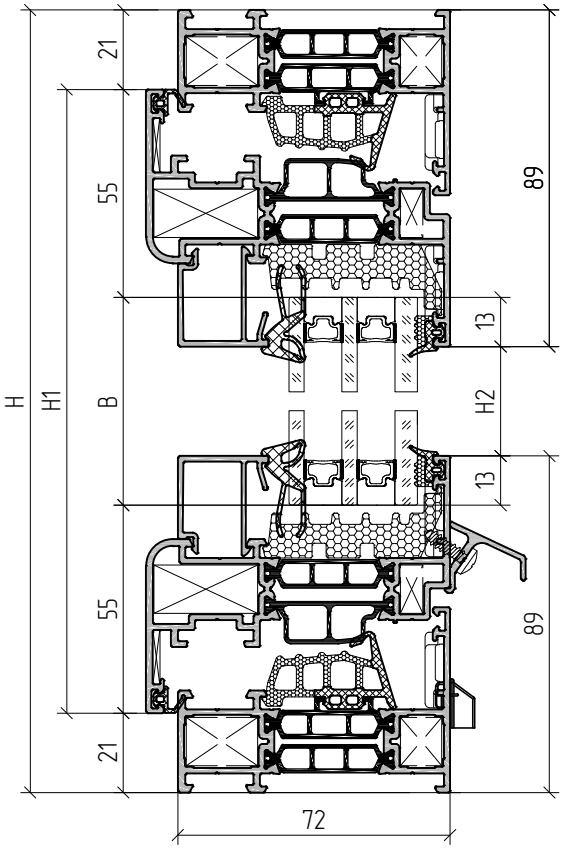

A–A

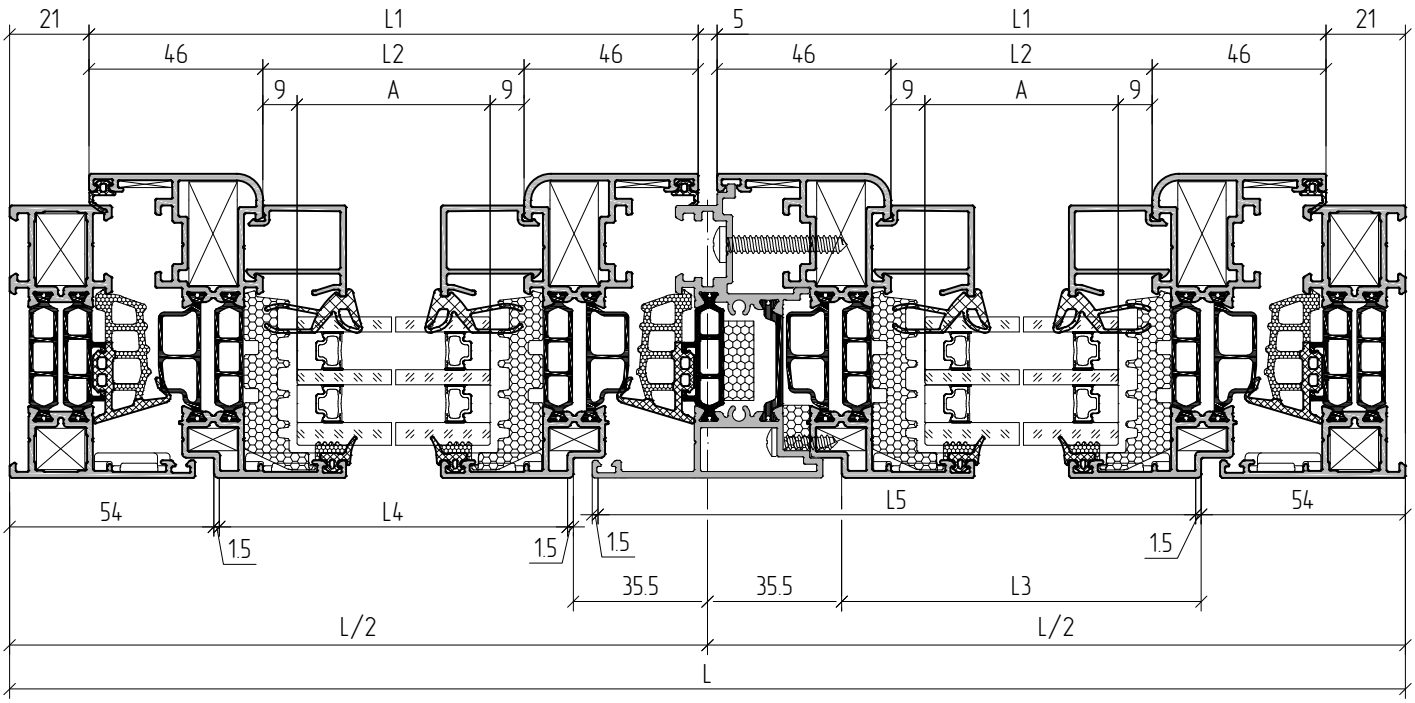

Example of combined window calculation

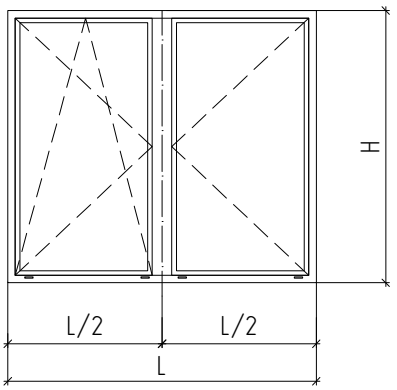

Article	Name Image	45°	L	1...
Profile				
AYPC.W72.0101	Frame profile		L	2
			H	2
AYPC.W72.0201	Sash profile		L1=L/2-23.5	4
			H1=H-42	4
AYPC.W72.0504	Double casement profile		H3=H1-66	1
AYPC.C48.0611	Drip bar		L4=L/2-92.5	1
			L5=L/2-26.5	1
AYPC.C48.0612 (AYPC.W62.0607)	Rod profile		-	1
AYPC.C48.0606	Glass bead profile		L2=L1-92	4
			H2=H1-136	4

Article	Name	Image	1...
Accessories			
AYPC.W62.0917	Bearing support		10
100x44x1(3)	Leveling support		10 (10)
AYPC.C48.0919M-01	Drip bar		4
AYPC.W62.0999	Kit of drip bar end plugs		2
AYPC.W62.0952-01	Clamping corner		4
AYPC.W62.0952-02	Clamping corner		4
AYPC.W62.0912	Plastic corner		12
Pin 5x10	Pin 5x10 DIN6325D		48
AYPC.W62.0957	Leveling corner		8
AYPC.W62.0952	Clamping corner		8
AYPC.W62.0952-03	Clamping corner		8
3.9x13-A2 DIN7981	Self-tapping screw		(L4+L5)/250+4
AYPC.W72.0944	Double casement profile plug		1
AYPC.W72.0944-01			1
3.9x16-A2 DIN7981	Self-tapping screw		H3/450
4.8x32-A2 DIN7981	Self-tapping screw		H3/450

Article	Name Image	L	1...
Gaskets			
FRK98	Rubber gasket	L1x4+H1x3	1
FRK195	Rubber gasket	Lx2+H1x2+H3	1
FRK196	Rubber corner		4
* FRK193	Rubber gasket	(Ax2+Bx2)x2	1
* AYPC.W72.0911	Seam sealing	(Ax2+Bx2)x2-10x100**	1
* FRK197	Rubber gasket	(Ax2+Bx2)x2	1
* FRK179	Rubber corner		8
*** FRK101	Rubber gasket	Lx2+H1x2+H3	1
34 mm infill unit			
A=L1-110; B=H1-110			2

1. Select articles of glass bead profiles and gaskets depending on infill unit thickness (see section 01.04 – Table of glazing).
2. The dimensions and quantities of AYPC.C48.0612 (AYPC.W62.0607) rod profile are determined by the type of hardware and sash dimensions (L1 and H1).

* Other accessories are possible (see section 01.05 – Sections and junctions).
** The quantity of removed AYPC.W72.0911 seam sealing depends on the type of opening and quantity of bearing supports.
*** See section 01.07 – Profiles machining and assembly (page 01.07.15 and page 01.07.40)

Example of tilt and turn window calculation with PVC hardware groove

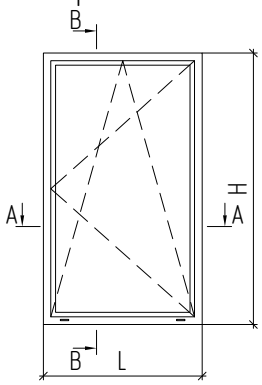

B–B

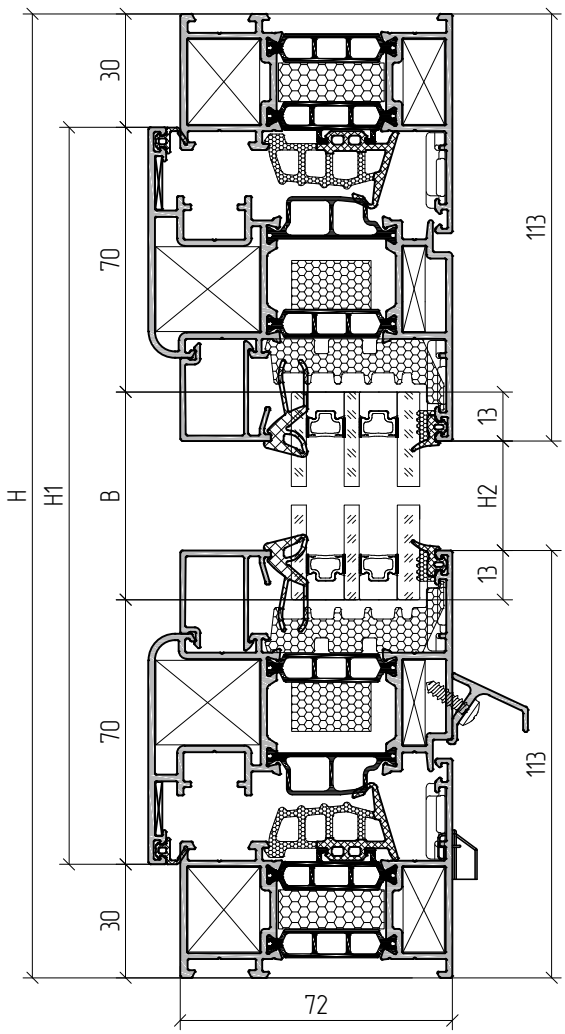

A–A

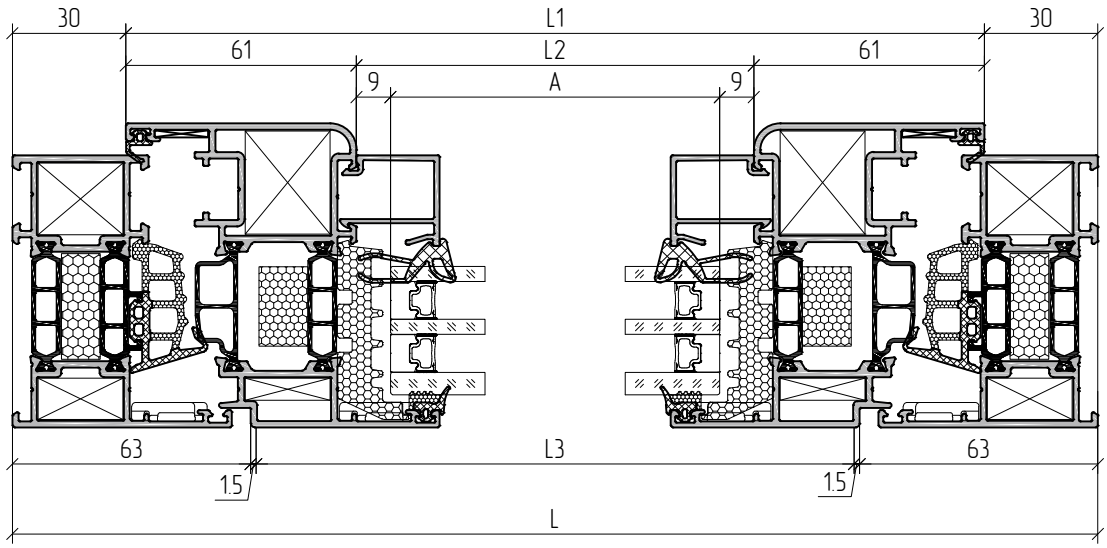

Example of tilt and turn window calculation

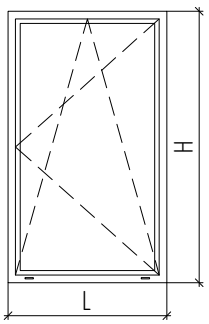

Article	Name Image	45°	L	1....
Profile				
AYPC.W72.0102	Frame profile 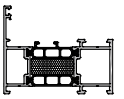		L	2
			H	2
AYPC.W72.0212	Sash profile 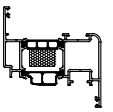		L1=L-60	2
			H1=H-60	2
AYPC.C48.0611	Drip bar		L3=L-129	1
AYPC.C48.0606	Glass bead profile		L2=L1-122	2
			H2=H1-166	2

Article	Name	Image	1....
Accessories			
AYPC.W62.0917	Bearing support		6
100x44x1(3)	Leveling support		6 (6)
AYPC.C48.0919M-01	Drip bar		2
AYPC.W62.0999	Kit of drip bar end plugs		1
AYPC.W62.0953-01	Clamping corner		4
AYPC.W62.0953-02	Clamping corner		4
AYPC.W62.0912	Plastic corner		8
Pin 5x10	Pin 5x10 DIN6325D		32
AYPC.W62.0957	Leveling corner		4
AYPC.W62.0953	Clamping corner		4
AYPC.W62.0953-03	Clamping corner		4
3.9x13-A2 DIN7981	Self-tapping screw		L3/250

Article	Name	Image	L	1....
Gaskets				
FRK98	Rubber gasket		L1x2+H1x2	1
FRK195	Rubber gasket		L1x2+H1x2	1
FRK196	Rubber corner			4
* FRK193	Rubber gasket		Ax2+Bx2	1
* AYPC.W72.0911	Seam sealing		Ax2+Bx2-6x100**	1
* FRK197	Rubber gasket		Ax2+Bx2	1
* FRK179	Rubber corner			4
*** FRK101	Rubber gasket		L1x2+H1x2	1
34 mm infill unit				
A=L1-140; B=H1-140				1

1. ROTO NT, GU UNI-JET D, SIEGENIA-AUBI Favorit window hardware. Fastening elements quantity depends on the type of hardware kit.
2. It is necessary to drill two walls of frame profile for hinge fastening. Use hardware jig for drilling.
3. Select articles of glass bead profiles and gaskets depending on infill unit thickness (see section 01.04 – Table of glazing).

* Other accessories are possible (see section 01.05 – Sections and junctions).
** The quantity of removed AYPC.W72.0911 seam sealing depends on the type of opening and quantity of bearing supports.
*** See section 01.07 – Profiles machining and assembly (page 01.07.15 and page 01.07.40)

Example of tilt and turn window calculation with PVC hardware groove

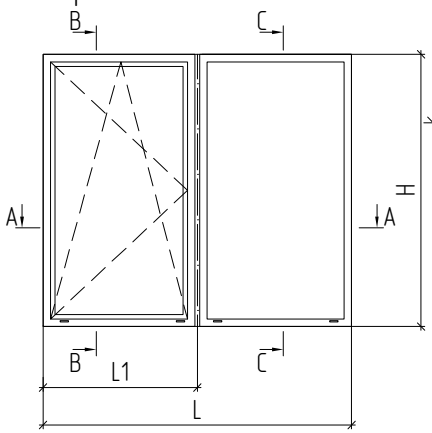

B–B

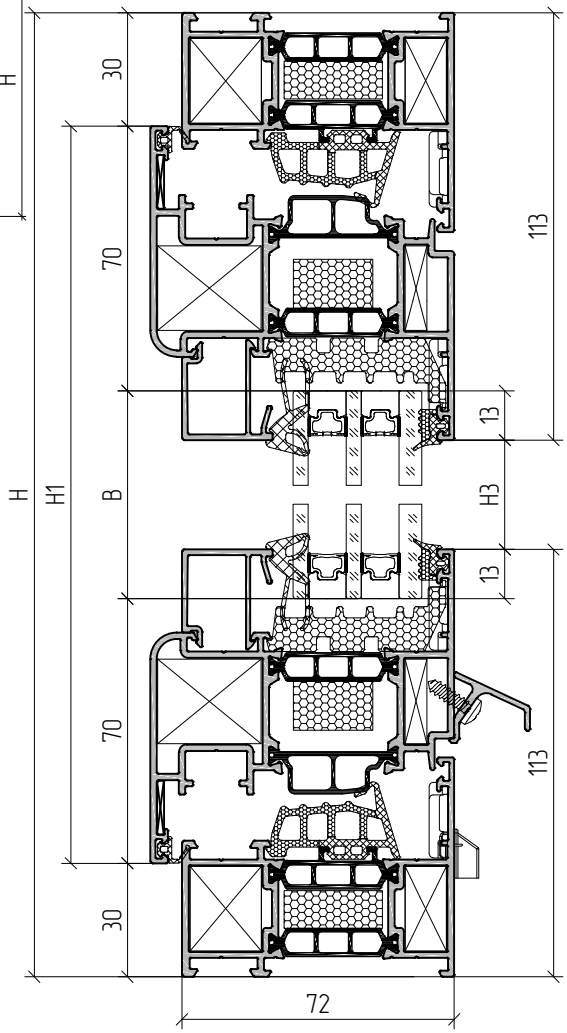

C–C

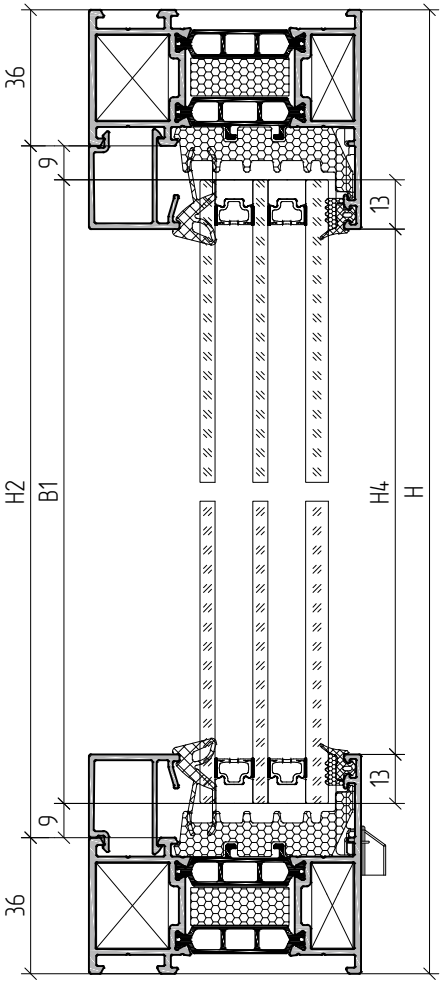

A–A

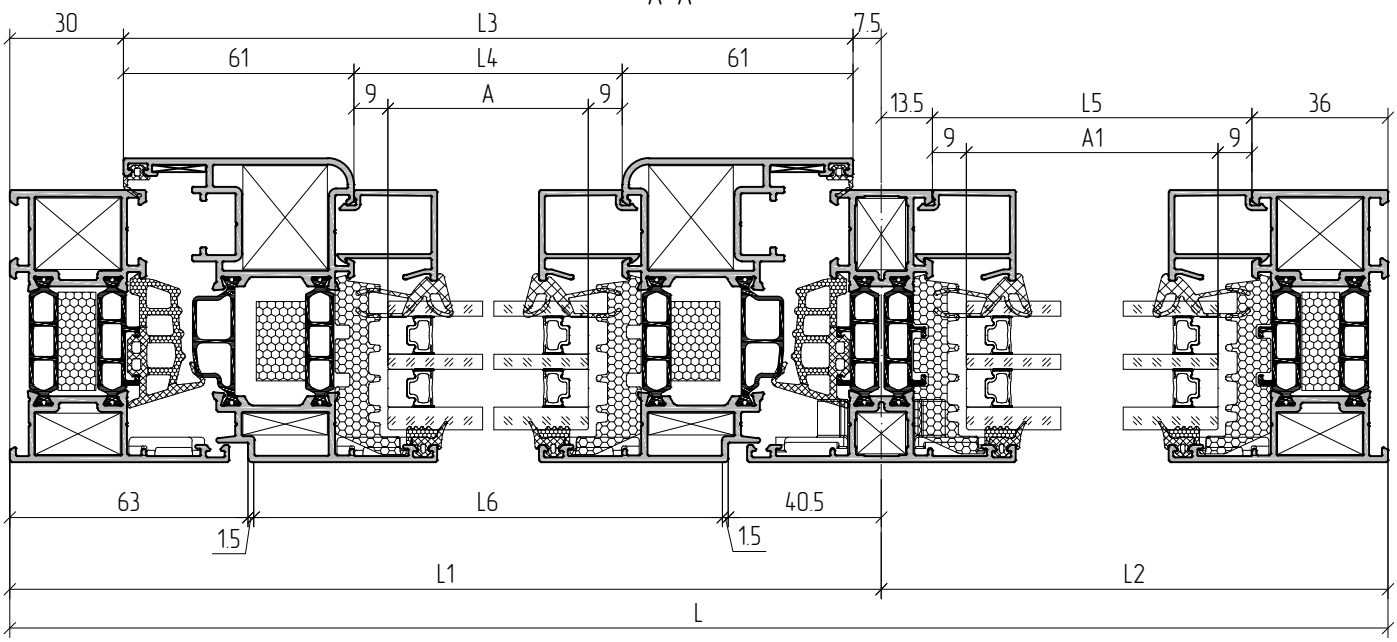

Example of tilt and turn window calculation with PVC hardware groove

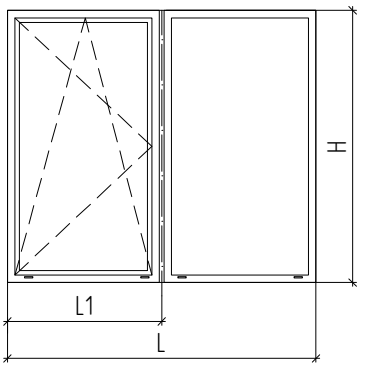

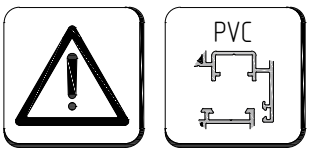

Article	Name Image	45°	L	1....
Profile				
AYPC.W72.0102	Frame profile 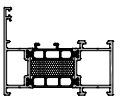		L	2
			H	2
AYPC.W72.0212	Sash profile 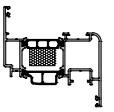		L3=L1-37.5	2
			H1=H-60	2
AYPC.W72.0301	Transom bar profile 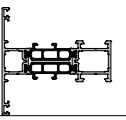		H2=H-72	1
AYPC.C48.0611	Drip bar		L6=L1-106.5	1
AYPC.C48.0606	Glass bead profile		L4=L3-122	2
			H3=H1-166	2
			L5=L2-49.5	2
			H4=H-116	2

Article	Name	Image	1....
Accessories			
AYPC.W62.0917	Bearing support		10
100x44x1(3)	Leveling support		10 (10)
AYPC.C48.0919M-01	Drain plug		4
AYPC.W62.0999	Kit of drip bar end plugs		1
AYPC.W62.0953-01	Clamping corner		4
AYPC.W62.0953-02	Clamping corner		4
AYPC.W62.0912	Plastic corner		8
Pin 5x10	Pin 5x10 DIN6325D		32
AYPC.W62.0957	Leveling corner		4
AYPC.W62.0953	Clamping corner		4
AYPC.W62.0953-03	Clamping corner		4
AYPC.W62.0973	Transom fixing element		2
AYPC.W62.0951	Transom fixing element		2
AYPC.W62.0916	Foamed support		2
AYPC.W62.0913	Plastic corner		4
3.9x13-A2 DIN7981	Self-tapping screw		L3/250

Article	Name	Image	L	1....
Gaskets				
FRK98	Rubber gasket		L3x2+H1x2	1
FRK195	Rubber gasket		L3x2+H1x2	1
FRK196	Rubber corner			4
* FRK193	Rubber gasket		(A+B)x2+(A1+B1)x2	1
* AYPC.W72.0911	Seam sealing		Ax2+Bx2-10x100**	1
* FRK197	Rubber gasket		(A+B)x2+(A1+B1)x2	1
* FRK179	Rubber corner			8
*** FRK101	Rubber gasket		L1x2+H1x2	1
34 mm infill unit				
A=L3-140; B=H1-140				1
A1=L2-67,5; B1=H-90				1

1. ROTO NT, GU UNI-JET D, SIEGENIA-AUBI Favorit window hardware. Fastening elements quantity depends on the type of hardware kit.
2. It is necessary to drill two walls of frame profile for hinges fastening. Use hardware jig for drilling.
3. Select articles of glass bead profiles and gaskets depending on infill unit thickness (see section 01.04 – Table of glazing).

* Other accessories are possible (see section 01.05 – Sections and junctions).
** The quantity of removed AYPC.W72.0911 seam sealing depends on the type of opening and quantity of bearing supports.
*** See section 01.07 – Profiles machining and assembly (page 01.07.15 and page 01.07.40)

Example of tilt and turn window calculation

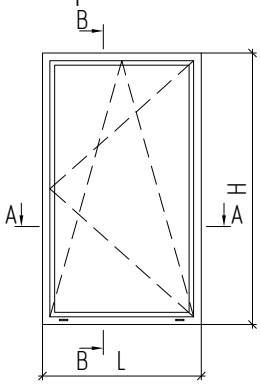

B–B

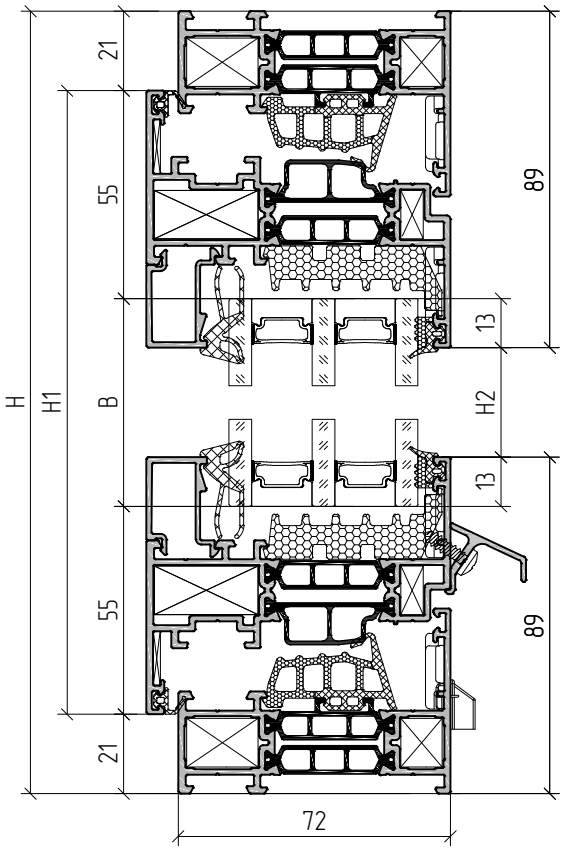

A–A

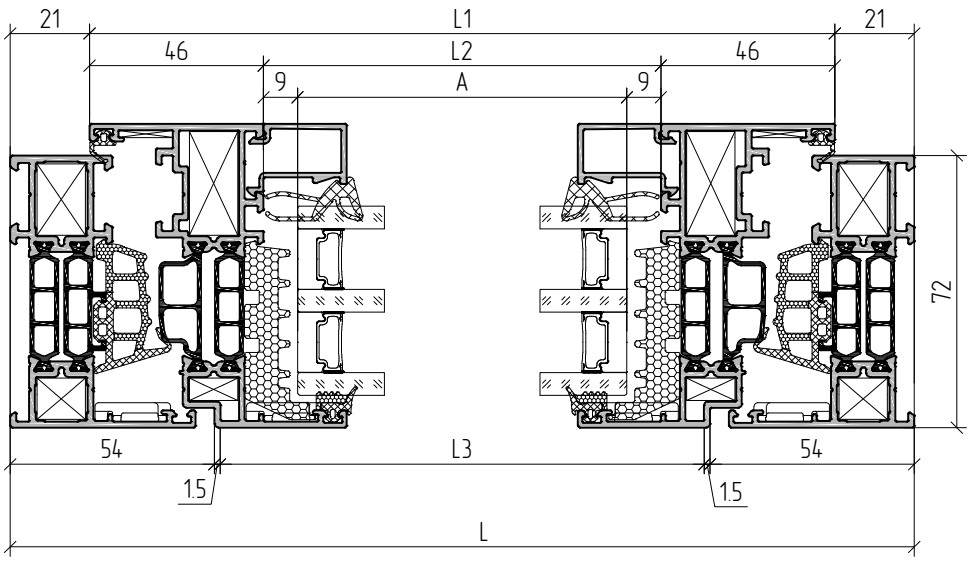

Example of tilt and turn window calculation

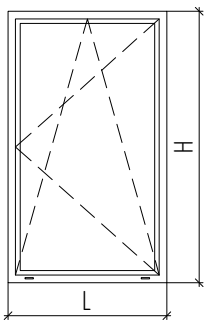

Article	Name Image	45°	L	1....
Profile				
AYPC.W72.0101	Frame profile 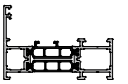		L	2
			H	2
AYPC.W72.0221	Sash profile 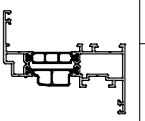		L1=L-42	2
			H1=H-42	2
AYPC.C48.0611	Drip bar		L3=L-111	1
AYPC.C48.0612 (AYPC.W62.0607)	Rod profile		-	
AYPC.C48.0604	Glass bead profile		L2=L1-92	2
			H2=H1-136	2

Article	Name	Image	1....
Accessories			
AYPC.W62.0917	Bearing support		6
100x56x1(3)	Leveling support		6 (6)
AYPC.C48.0919M-01	Drain plug		2
AYPC.W62.0999	Kit of drip bar end plugs		1
AYPC.W62.0952-01	Clamping corner		4
AYPC.W62.0952-02	Clamping corner		4
AYPC.W62.0912	Plastic corner		8
Pin 5x10	Pin 5x10 DIN6325D		32
AYPC.W62.0957	Leveling corner		4
AYPC.W62.0952	Clamping corner		4
AYPC.W62.0952-03	Clamping corner		4
3.9x13-A2 DIN7981	Self-tapping screw		L3/250

Article	Name	Image	L	1....
Gaskets				
FRK98	Rubber gasket		L1x2+H1x2	1
FRK195	Rubber gasket		L1x2+H1x2	1
FRK196	Rubber corner			4
* FRK193	Rubber gasket		(A+B)x2	1
* AYPC.W72.0911	Seam sealing		Ax2+Bx2-6x100**	1
* FRK197	Rubber gasket		(A+B)x2	1
* FRK179	Rubber corner			4
*** FRK101	Rubber gasket		L1x2+H1x2	1
50 mm infill unit				
A=L1-110; B=H1-110				1

1. Select articles of glass bead profiles and gaskets depending on infill unit thickness (see section 01.04 – Table of glazing).
2. The dimensions and quantities of AYPC.C48.0612 (AYPC.W62.0607) rod profile are determined by the type of hardware and sash dimensions (L1 and H1).

* Other accessories are possible (see section 01.05 – Sections and junctions).
** The quantity of removed AYPC.W72.0911 seam sealing depends on the type of opening and quantity of bearing supports.
*** See section 01.07 – Profiles machining and assembly (page 01.07.15 and page 01.07.40)

Example of combined window calculation

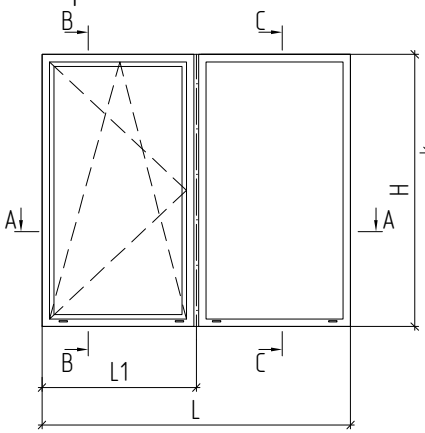

B–B

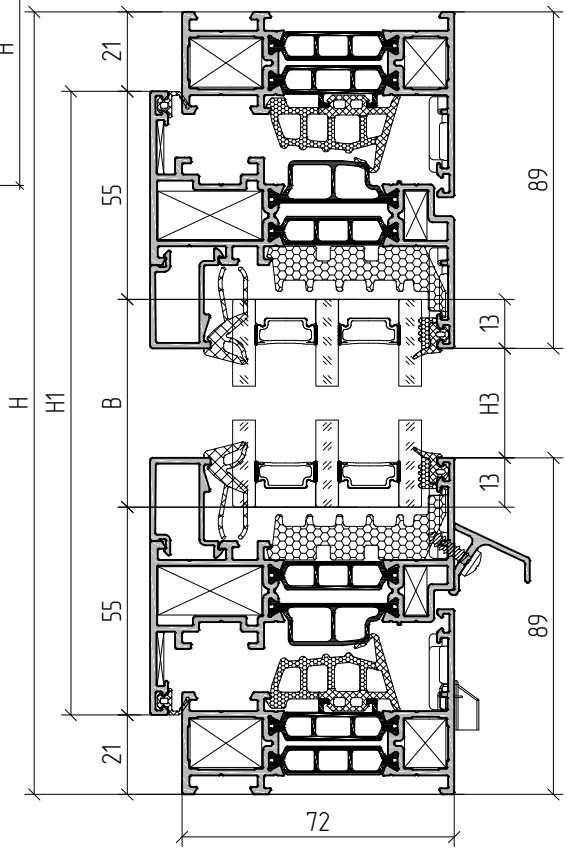

C–C

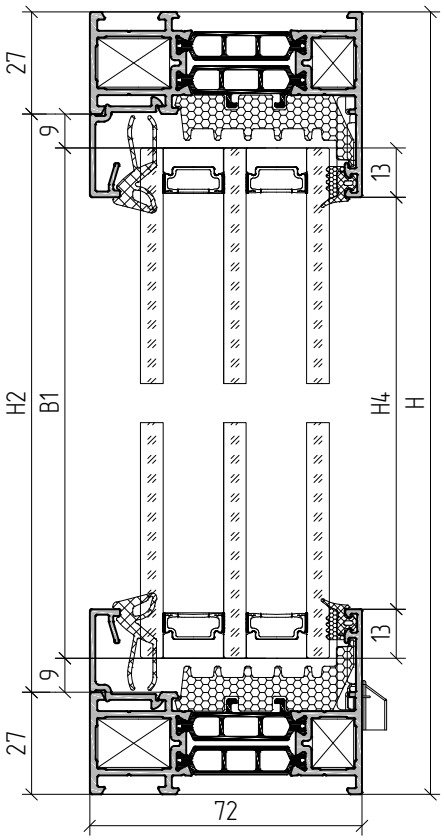

A–A

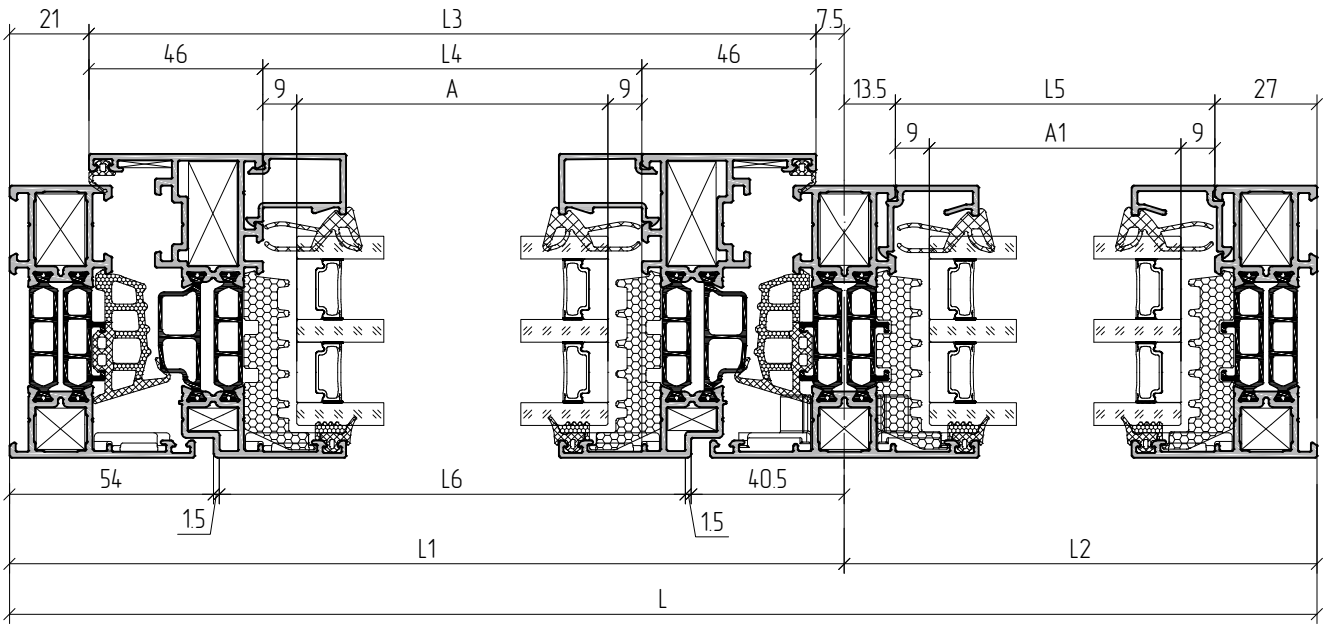

Example of combined window calculation

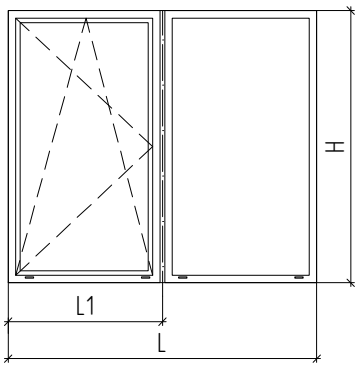

Article	Name Image	45°	L	1....
Profile				
AYPC.W72.0101	Frame profile		L	2
			H	2
AYPC.W72.0221	Sash profile		L3=L1-28.5	2
			H1=H-42	2
AYPC.W72.0301	Transom bar profile		H2=H-54	1
AYPC.C48.0611	Drip bar		L6=L1-97.5	1
AYPC.C48.0612 (AYPC.W62.0607)	Rod profile		-	1
AYPC.C48.0604	Glass bead profile		L4=L3-92	2
			H3=H1-136	2
AYPC.C48.0602	Glass bead profile		L5=L2-40.5	2
			H4=H-98	2

Article	Name Image	1....
Accessories		
AYPC.W62.0917	Bearing support	10
100x56x1(3)	Leveling support	10 (10)
AYPC.C48.0919M-01	Drain plug	4
AYPC.W62.0999	Kit of drip bar end plugs	1
AYPC.W62.0952-01	Clamping corner	4
AYPC.W62.0952-02	Clamping corner	4
AYPC.W62.0912	Plastic corner	8
Pin 5x10	Pin 5x10 DIN6325D	32
AYPC.W62.0957	Leveling corner	4
AYPC.W62.0952	Clamping corner	4
AYPC.W62.0952-03	Clamping corner	4
AYPC.W62.0973	Transom fixing element	2
AYPC.W62.0951	Transom fixing element	2
AYPC.W62.0916	Foamed support	2
AYPC.W62.0913	Plastic corner	4
3.9x13-A2 DIN7981	Self-tapping screw	L6/250

Article	Name Image	L	1....
Gaskets			
FRK98	Rubber gasket	L3x2+H1x2	1
FRK195	Rubber gasket	L3x2+H1x2	1
FRK196	Rubber corner		4
* FRK193	Rubber gasket	(A+B)x2+(A1+B1)x2	1
* AYPC.W72.0911	Seam sealing	(A+B)x2+(A1+B1)x2-10x100**	1
* FRK197	Rubber gasket	(A+B)x2+(A1+B1)x2	1
* FRK179	Rubber corner		8
*** FRK101	Rubber gasket	L3x2+H1x2	1
50 mm infill unit			
A=L3-110; B=H1-110			1
A1=L2-58,5; B1=H-72			1

1. Select articles of glass bead profiles and gaskets depending on infill unit thickness (see section 01.04 – Table of glazing).
2. The dimensions and quantities of AYPC.C48.0612 (AYPC.W62.0607) rod profile are determined by the type of hardware and sash dimensions (L1 and H1).

* Other accessories are possible (see section 01.05 – Sections and junctions).
** The quantity of removed AYPC.W72.0911 seam sealing depends on the type of opening and quantity of bearing supports.
*** See section 01.07 – Profiles machining and assembly (page 01.07.15 and page 01.07.40)

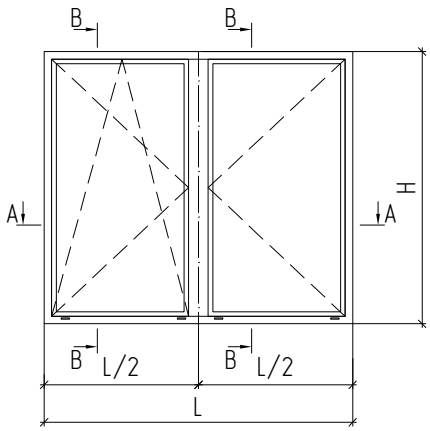
B
B
A
A
H
B
L/2
B
L/2
L

B–B

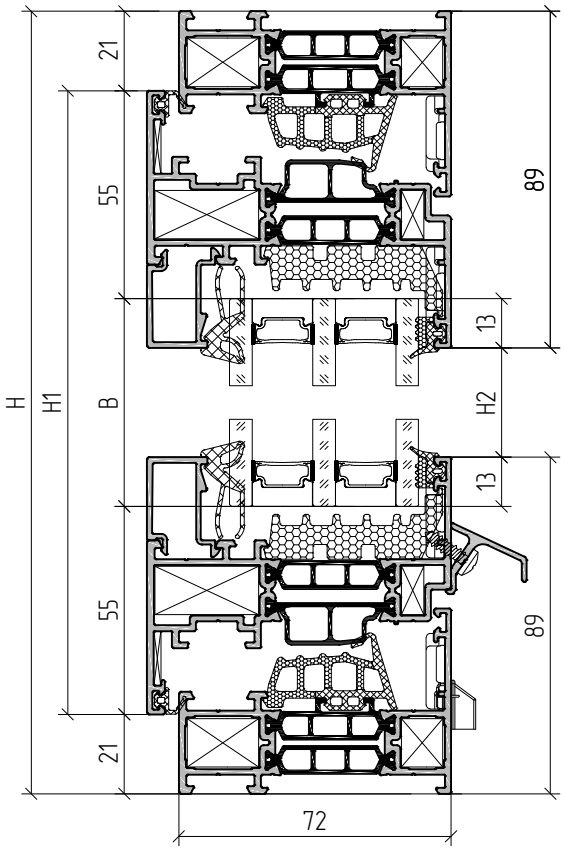
21
55
89
13
H
H1
B
H2
13
55
89
21
72

A–A

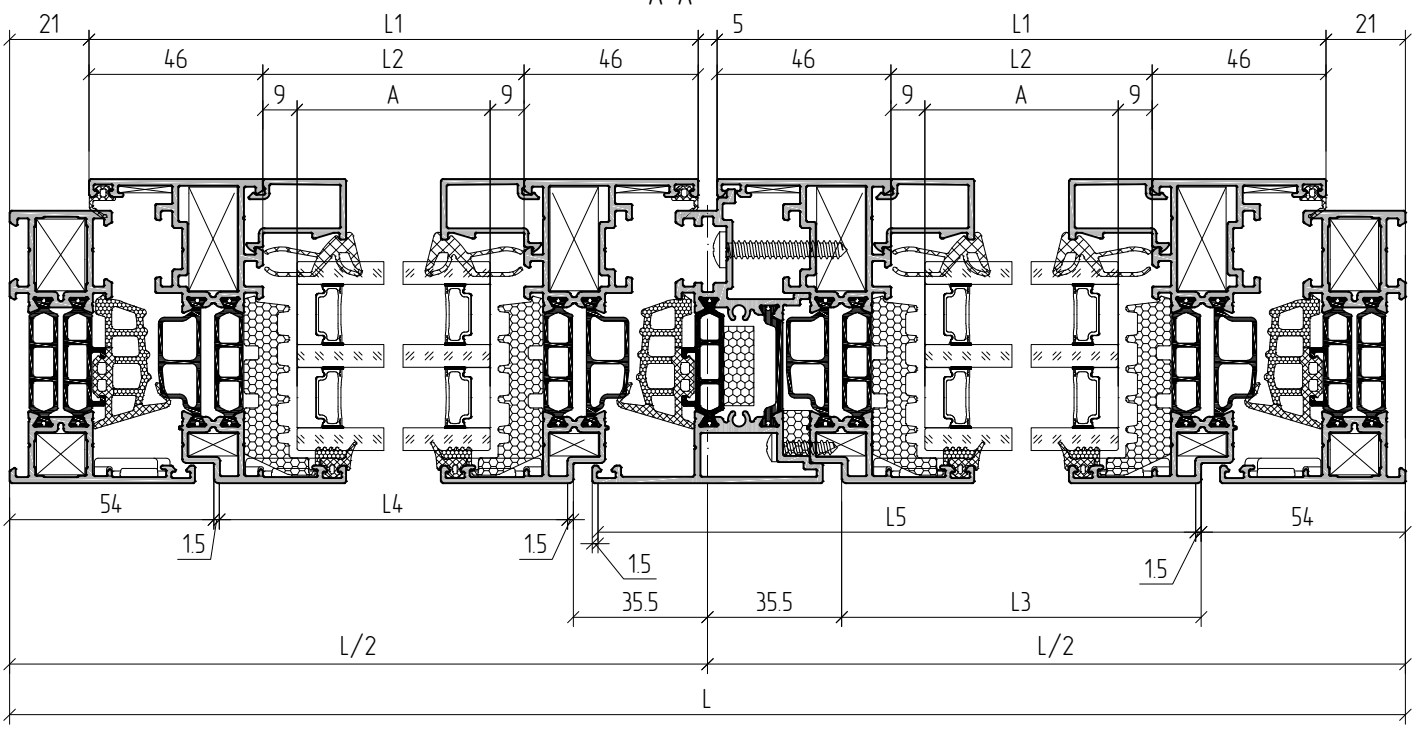
21
L1
46
L2
46
9
A
9
5
L1
46
L2
46
9
A
9
21
54
L4
1.5
1.5
1.5
35.5
L5
35.5
L3
54
1.5
L/2
L/2
L

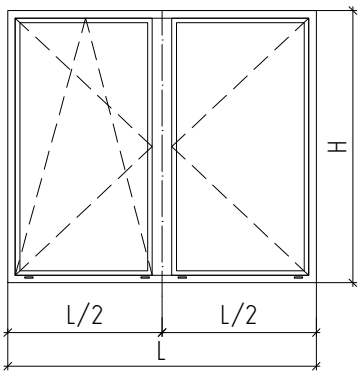

Article	Name Image	45°	L	1...
Profile				
AYPC.W72.0101	Frame profile 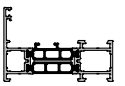		L	2
			H	2
AYPC.W72.0221	Sash profile 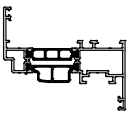		L1=L/2-23.5	4
			H1=H-42	4
AYPC.W72.0504	Double casement profile 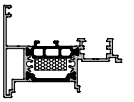		H3=H1-66	1
AYPC.C48.0611	Drip bar		L4=L/2-92.5	1
			L5=L/2-26.5	1
AYPC.C48.0612 (AYPC.W62.0607)	Rod profile		-	1
AYPC.C48.0604	Glass bead profile		L2=L1-92	4
			H2=H1-136	4

Article	Name	Image	1...
Accessories			
AYPC.W62.0917	Bearing support		10
100x56x1(3)	Leveling support		10 (10)
AYPC.C48.0919M-01	Drain plug		4
AYPC.W62.0999	Kit of drip bar end plugs		2
AYPC.W62.0952-01	Clamping corner		4
AYPC.W62.0952-02	Clamping corner		4
AYPC.W62.0912	Plastic corner		12
Pin 5x10	Pin 5x10 DIN6325D		48
AYPC.W62.0957	Leveling corner		8
AYPC.W62.0952	Clamping corner		8
AYPC.W62.0952-03	Clamping corner		8
3.9x13-A2 DIN7981	Self-tapping screw		(L4+L5)/250+4
AYPC.W72.0944	Double casement profile plug	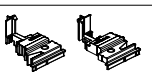	1
AYPC.W72.0944-01			1
3.9x16-A2 DIN7981	Self-tapping screw		H3/450
4.8x32-A2 DIN7981	Self-tapping screw		H3/450

Article	Name	Image	L	1...
Gaskets				
FRK98	Rubber gasket		L1x4+H1x3	1
FRK195	Rubber gasket		Lx2+H1x2+H3	1
FRK196	Rubber corner			4
* FRK193	Rubber gasket		(Ax2+Bx2)x2	1
* AYPC.W72.0911	Seam sealing		(Ax2+Bx2)x2-10x100**	1
* FRK197	Rubber gasket		(Ax2+Bx2)x2	1
* FRK179	Rubber corner			8
*** FRK101	Rubber gasket		Lx2+H1x2+H3	1
50 mm infill unit				
A=L1-110; B=H1-110				2

1. Select articles of glass bead profiles and gaskets depending on infill unit thickness (see section 01.04 – Table of glazing).
2. The dimensions and quantities of AYPC.C48.0612 (AYPC.W62.0607) rod profile are determined by the type of hardware and sash dimensions (L1 and H1).

* Other accessories are possible (see section 01.05 – Sections and junctions).
** The quantity of removed AYPC.W72.0911 seam sealing depends on the type of opening and quantity of bearing supports.
*** See section 01.07 – Profiles machining and assembly (page 01.07.15 and page 01.07.40)

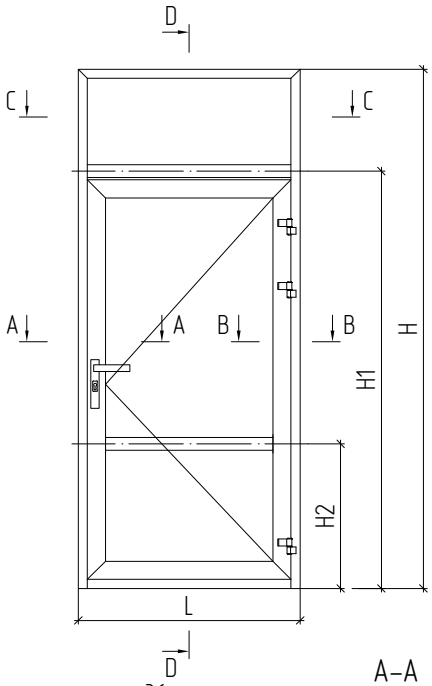
D
C
C
A
A
B
B
H
H1
H2
L
D

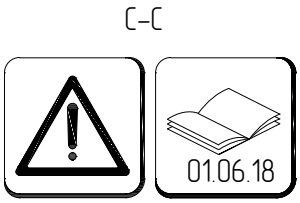
C–C
01.06.18

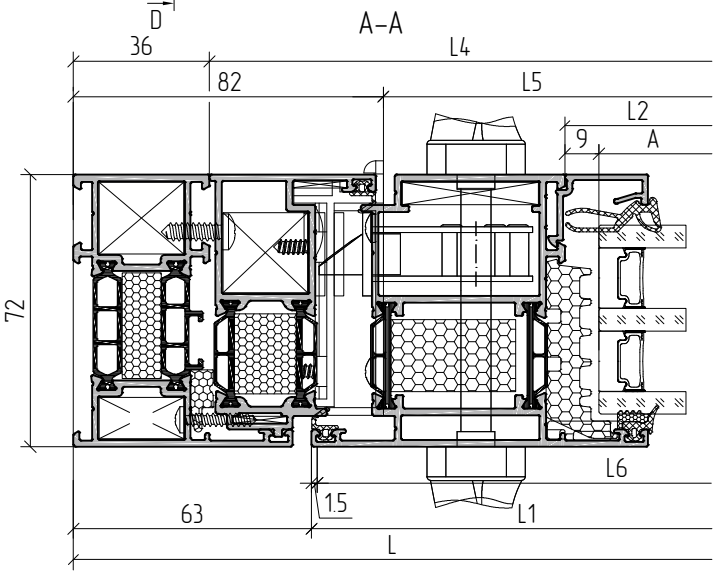
A–A
36
82
L4
L5
L2
9
A
72
L6
1.5
63
L1
L

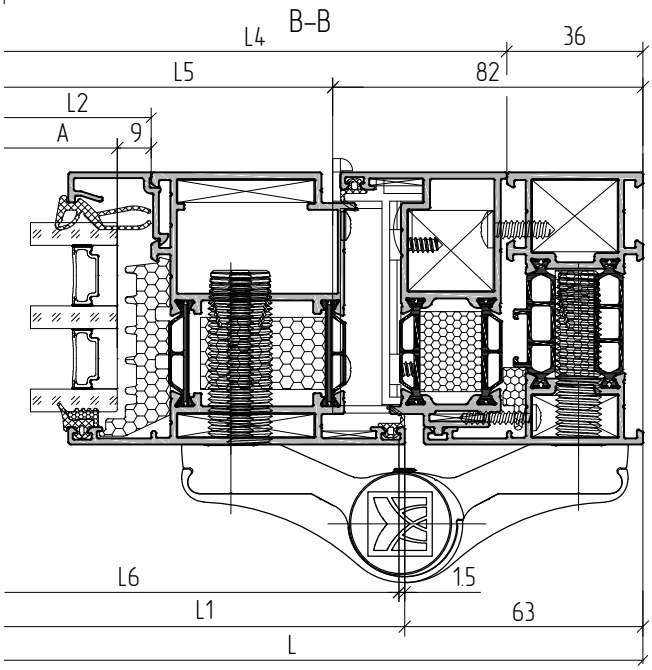
B–B
L4
36
L5
82
L2
A
9
L6
1.5
L1
63
L

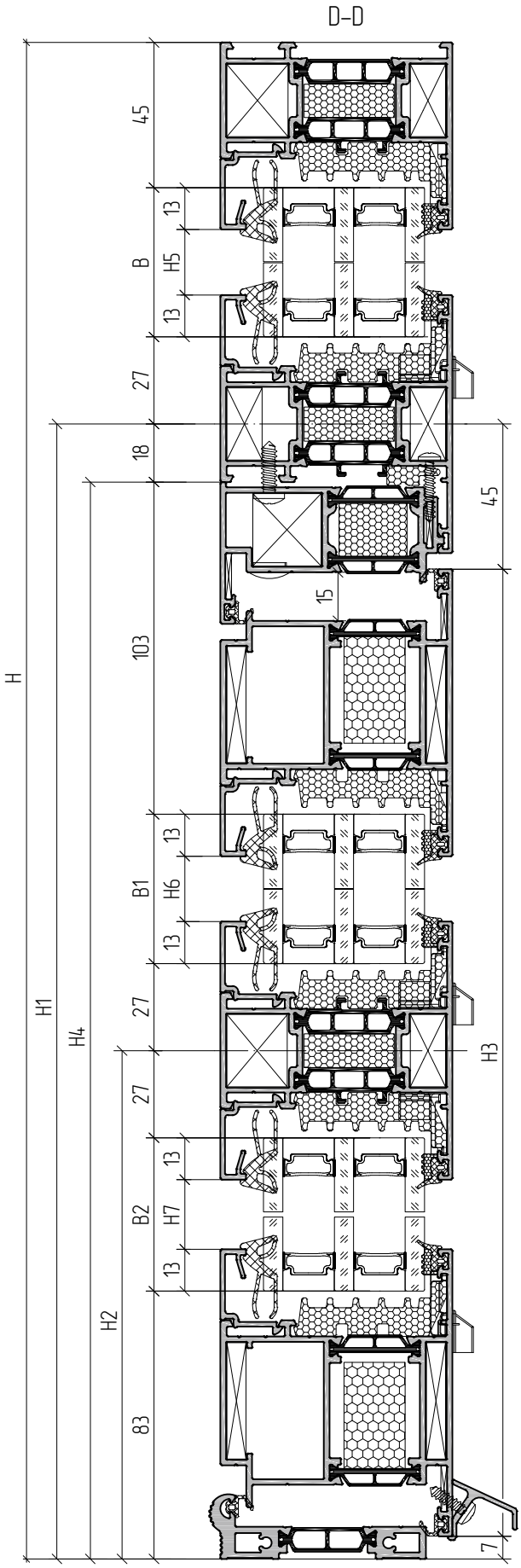
D–D
H
H1
H4
H2
H3
45
13
B
H5
13
27
18
45
15
103
13
B1
H6
13
27
27
13
B2
H7
13
83
7

Example of outward opening single leaf door with glass unit calculation

Article	Name	Image	1....
	Accessories		
AYPC.W62.0917	Bearing support		12
100x56x1(3)	Leveling support		12 (12)
AYPC.C48.0919M-01	Drain plug		6
AYPC.W62.0999	Kit of drip bar end plugs		1
AYPC.W62.0937	Clamping corner		8
AYPC.W62.0912	Plastic corner		6
AYPC.W62.0953-01	Clamping corner		2
AYPC.W62.0953-02	Clamping corner		2
AYPC.W62.0953-04	Clamping corner		2
Pin 5x10	Pin 5x10 DIN6325D		28
AYPC.W62.0913	Plastic corner		6
AYPC.W62.0957	Leveling corner		8
AYPC.W62.0973-01	Transom fixing element		4
AYPC.W62.0951-01	Transom fixing element		4
AYPC.W62.0916-01	Foamed support		4
AYPC.W72.0947	Threshold plug kit		1
AYPC.W72.0948	Threshold plug kit		1
AYPC.SL160.0928	Threshold plug kit Ø10		
4.8x16-A2 DIN7981	Self-tapping screw		(L4+H4x2)/450
3.5x19-A2 DIN7981	Self-tapping screw		
3.9x13-A2 DIN7981	Self-tapping screw		L6/250
3.9x16-A2 DIN7981	Self-tapping screw		4
3.9x16-A2 DIN7982	Self-tapping screw		4

50 mm infill unit	
A=L1-152; B2=H2-110	1
A=L1-152; B1=H4-H2-130	1
A1=L-90; B=H-H1-72	1

C-C

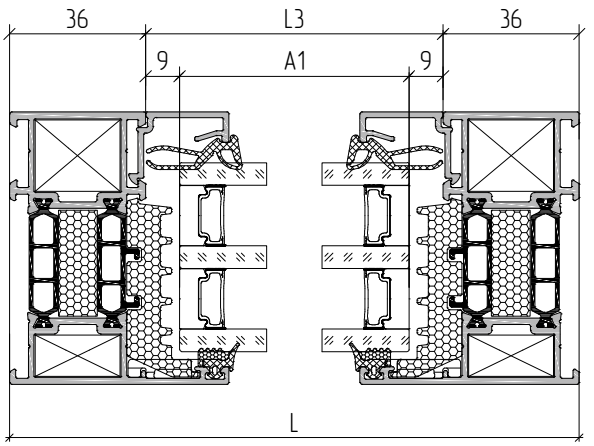

Article	Name Image	45°	L	1....
	Profile			
AYPC.W72.0102	Frame profile		L	1
			H	1
			H	1
AYPC.W72.0302	Transom bar profile		L2=L1-134	1
			L3=L-72	1
AYPC.W72.0803	Auxiliary door profile		L4=L3	1
			H4=H1-18	1
			H4=H1-18	1
AYPC.W72.0204	Sash profile		L1=L-126	1
			H3=H1-52	2
AYPC.W72.0241	Sash profile		* L1=L-126	1
AYPC.W72.0838	Threshold profile		L5=L-164	1
AYPC.C48.0611	Drip bar		L6=L1-3	1
AYPC.C48.0602	Glass bead profile		L7=L2	4
			L8=L3	2
			H5=H-H1-98	2
			H6=H4-H2-156	2
			H7=H2-136	2

Article	Name	Image	L	1....
	Gaskets			
FRK98	Rubber gasket		(L+H)x2+(L1+H2)x2	1
AYPC.W62.0977	Rubber corner			2
** FRK193	Rubber gasket		Ax4+(A1+B+B1+B2)x2	1
** AYPC.W72.0911	Seam sealing		Ax4+(A1+B+B1+B2)x2-12x100***	1
** FRK197	Rubber gasket		Ax4+(A1+B+B1+B2)x2	1
** FRK179	Rubber corner			12
AYPC.F50.1921	Seam sealing		L4+H4x2	1

1. Select articles of glass bead profiles and gaskets depending on infill unit thickness (see section 01.04 (window)- Table of glazing).
2. For profiles marked with * the subsequent machining is required (See section 01.07 – Profiles machining and assemblage of profiles).

** Other accessories are possible (see section 01.05 – Sections and junctions).

*** The quantity of removed AYPC.W72.0911 seam sealing depends on the type of opening and quantity of bearing supports

Main dimensions

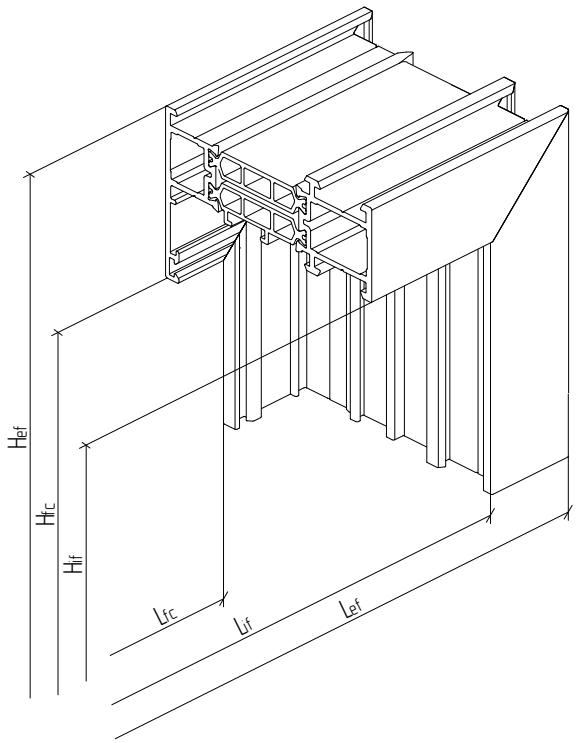

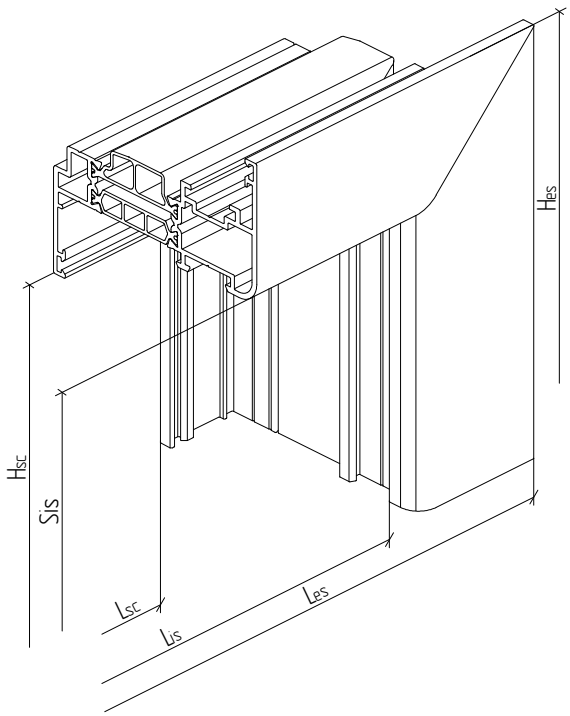

Lef – external frame width
Lif – internal frame width
Lfc – frame width clearance
Hef – external frame height
Hif – internal frame height
Hfc – frame height clearance

Les – external sash width
Lis – internal sash height
Lsc – sash width clearance
Hes – external sash height
Sis – internal sash height
Hsc – sash height clearance

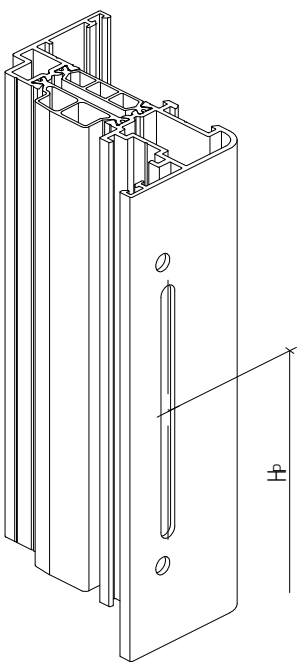

Lc – glass width
Hc – glass height

Hp – dimension from sash bottom to handle axis

Window options

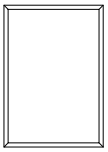
Fixed light

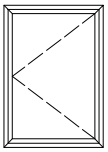
Side hung window

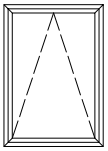
Top hung window

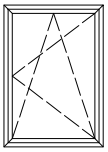
Tilt and turn window

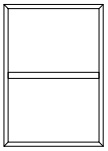
Fixed light with horizontal transom

Double sash window with horizontal transom

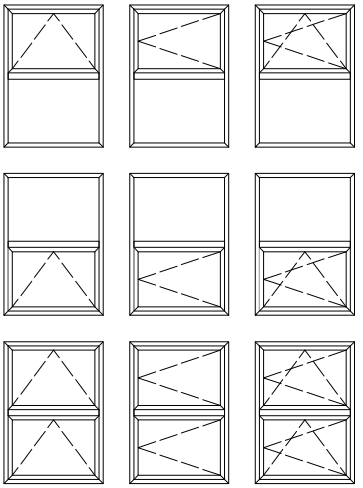

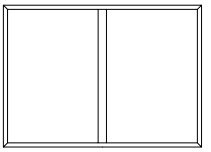
Fixed light with vertical transom

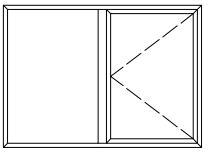
Double sash window with fixed light and side hung sash

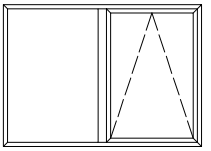
Double sash window with fixed light and top hung sash

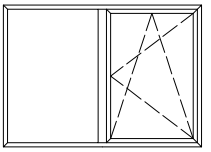
Double sash window with fixed light and tilt and turn sash

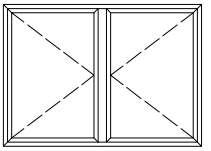
Double sash window with two side hung sashes

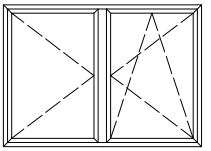
Double sash window with side hung and tilt and turn sashes

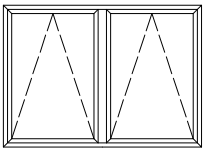
Double sash window with top hung sashes

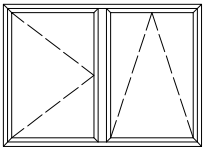
Double sash window with side hung and top hung sashes

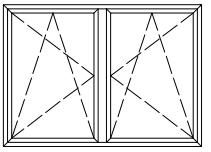
Double sash window with tilt and turn sashes

Corner crimping profile

AYPC.C48.0702

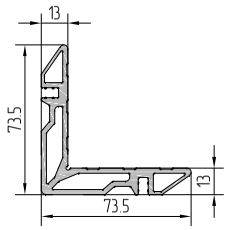

AYPC.C48.0707

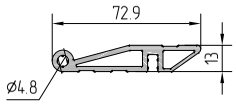

AYPC.C48.0708

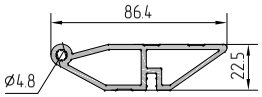

AYPC.W50.0703

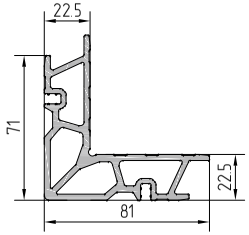

AYPC.W62.0708

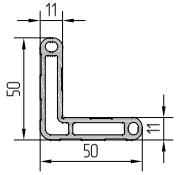

AYPC.W62.0709

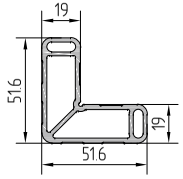

AYPC.C48.0704

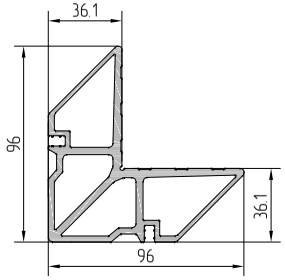

AYPC.W62.0710

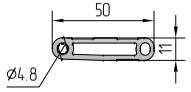

AYPC.W62.0711

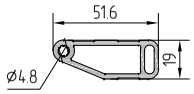

Clamping corner made from AYPC.C48.0702 profile

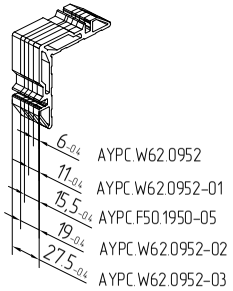

AYPC.W62.0952
AYPC.W62.0952-01
AYPC.F50.1950-05
AYPC.W62.0952-02
AYPC.W62.0952-03

Clamping corner made from AYPC.W50.0703 profile

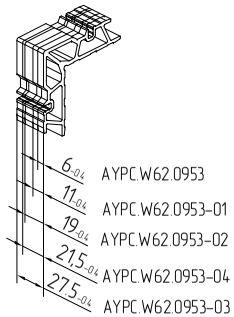

AYPC.W62.0953
AYPC.W62.0953-01
AYPC.W62.0953-02
AYPC.W62.0953-04
AYPC.W62.0953-03

Clamping corner made from profile AYPC.C48.0704

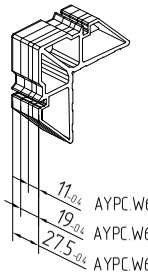

AYPC.W62.0954-02
AYPC.W62.0954-03
AYPC.W62.0954-05

Clamping corner made from AYPC.C48.0707 profile

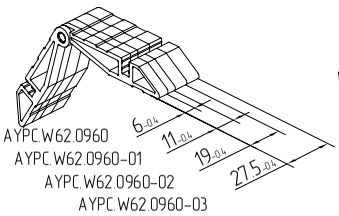

AYPC.W62.0960
AYPC.W62.0960-01
AYPC.W62.0960-02
AYPC.W62.0960-03

Clamping corner made from AYPC.C48.0708 profile

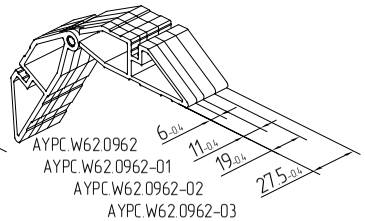

AYPC.W62.0962
AYPC.W62.0962-01
AYPC.W62.0962-02
AYPC.W62.0962-03

Clamping corner made from AYPC.W62.0708 profile

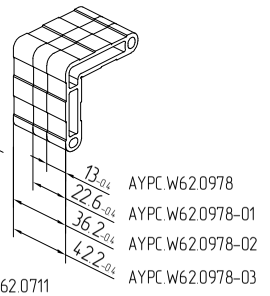

AYPC.W62.0978
AYPC.W62.0978-01
AYPC.W62.0978-02
AYPC.W62.0978-03

Clamping corner made from AYPC.W62.0709 profile

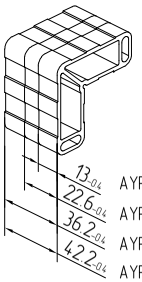

AYPC.W62.0979
AYPC.W62.0979-01
AYPC.W62.0979-02
AYPC.W62.0979-03

Clamping corner made from AYPC.W62.0710 profile

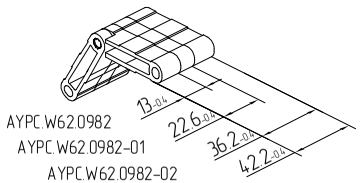

AYPC.W62.0982
AYPC.W62.0982-01
AYPC.W62.0982-02
AYPC.W62.0982-03

Clamping corner made from AYPC.W62.0711 profile

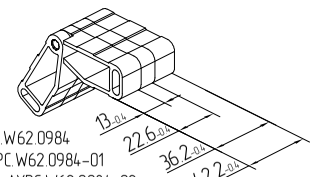

AYPC.W62.0984
AYPC.W62.0984-01
AYPC.W62.0984-02
AYPC.W62.0984-03

AYPC.W62.0937 casted clamping corner

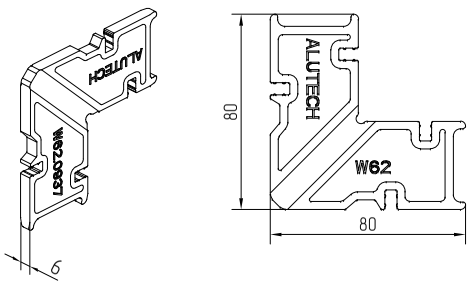

Table of clamping elements

Correspondence table of clamping corners

Corner connection of frame profiles and wideners

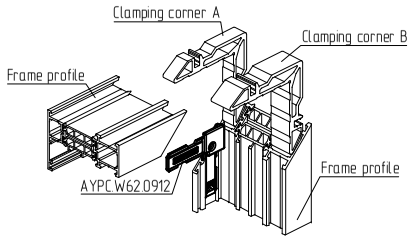

Article	Clamping corner A	Clamping corner B
AYPC.W72.0101	AYPC.W62.0952-01	AYPC.W62.0952-02
AYPC.W72.0102, AYPC.W72.0107	AYPC.W62.0953-01	AYPC.W62.0953-02
AYPC.W72.0103	AYPC.W62.0954-02	AYPC.W62.0954-03

Correspondence table of clamping corners

Corner connection of frame profile

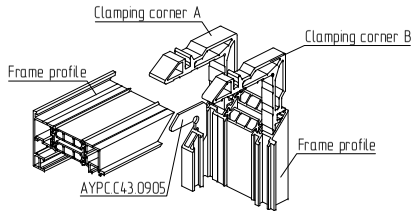

Article	Clamping corner A	Clamping corner B
AYPC.W72.0815	AYPC.F50.1950-05	AYPC.W62.0952-01

Correspondence table of clamping corners

Corner connection of sash profiles

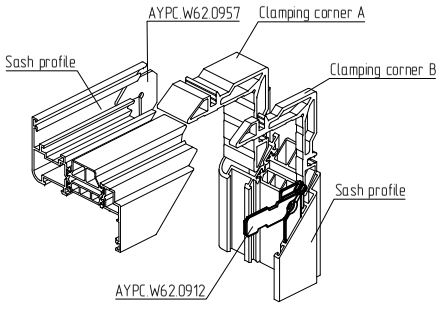

Article	Clamping corner A	Clamping corner B
AYPC.W72.0201, AYPC.W72.0221	AYPC.W62.0952-03	AYPC.W62.0952
AYPC.W72.0202, AYPC.W72.0212, AYPC.W72.0222	AYPC.W62.0953-03	AYPC.W62.0953
AYPC.W72.0203, AYPC.W72.0223	AYPC.W62.0954-05	AYPC.W62.0937

Correspondence table of clamping corners

Corner connection of transom bar profiles

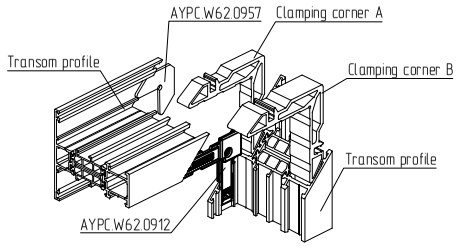

Article	Clamping corner A	Clamping corner B
AYPC.W72.0301	AYPC.W62.0952-01	AYPC.W62.0952-02
AYPC.W72.0302	AYPC.W62.0953-01	AYPC.W62.0953-02
AYPC.W72.0303	AYPC.W62.0954-02	AYPC.W62.0954-03

Correspondence table of clamping corners

Corner connection of auxiliary door profile

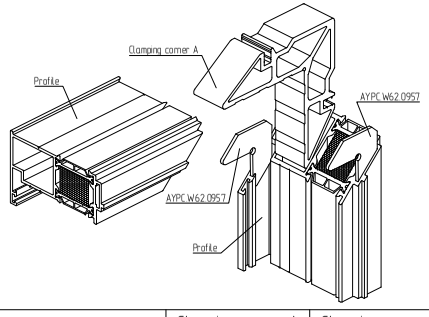

Article	Clamping corner A	Clamping corner B
AYPC.W72.0803	AYPC.W62.0953-04	-

Correspondence table of clamping corners

Corner connection of frame profiles

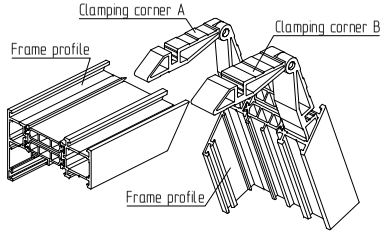

Article	Clamping corner A	Clamping corner B
AYPC.W72.0101	AYPC.W62.0960-01	AYPC.W62.0960-02
AYPC.W72.0102	AYPC.W62.0962-01	AYPC.W62.0962-02

Correspondence table of clamping corners

Corner connection of sash profiles

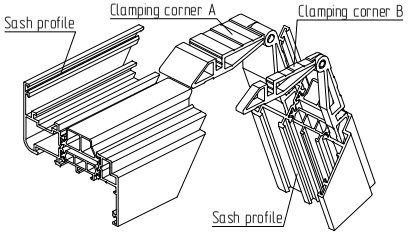

Article	Clamping corner A	Clamping corner B
AYPC.W72.0201, AYPC.W72.0221	AYPC.W62.0960-03	AYPC.W62.0960
AYPC.W72.0202, AYPC.W72.0212, AYPC.W72.0222	AYPC.W62.0962-03	AYPC.W62.0962

Correspondence table of clamping corners

Corner connection of transom bar profiles

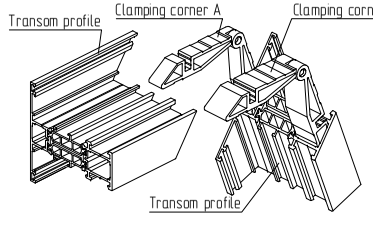

Article	Clamping corner A	Clamping corner B
AYPC.W72.0301	AYPC.W62.0960-01	AYPC.W62.0960-02
AYPC.W72.0302	AYPC.W62.0962-01	AYPC.W62.0962-02

Correspondence table of clamping corners

Corner connection of frame profiles

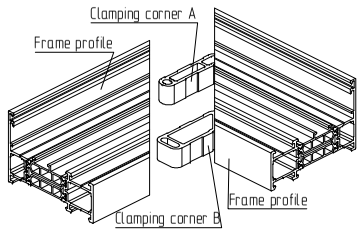

Article	Clamping corner A	Clamping corner B
AYPC.W72.0101	AYPC.W62.0978	AYPC.W62.0979
AYPC.W72.0102	AYPC.W62.0978-01	AYPC.W62.0979-01
AYPC.W72.0103	AYPC.W62.0978-02	AYPC.W62.0979-02
AYPC.W72.0106	AYPC.W62.0978-03	AYPC.W62.0979-03

Correspondence table of clamping corners

Corner connection of transom bar profiles

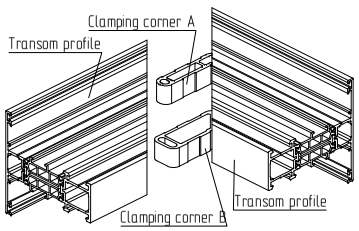

Article	Clamping corner A	Clamping corner B
AYPC.W72.0301	AYPC.W62.0978	AYPC.W62.0979
AYPC.W72.0302	AYPC.W62.0978-01	AYPC.W62.0979-01
AYPC.W72.0303	AYPC.W62.0978-02	AYPC.W62.0979-02

Correspondence table of clamping corners

Corner connection of frame profiles

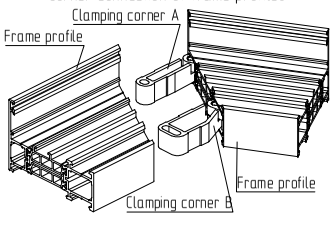

Article	Clamping corner A	Clamping corner B
AYPC.W72.0101	AYPC.W62.0982	AYPC.W62.0984
AYPC.W72.0102	AYPC.W62.0982-01	AYPC.W62.0984-01
AYPC.W72.0103	AYPC.W62.0982-02	AYPC.W62.0984-02
AYPC.W72.0106	AYPC.W62.0982-03	AYPC.W62.0984-03

Correspondence table of clamping corners

Corner connection of transom bar profiles

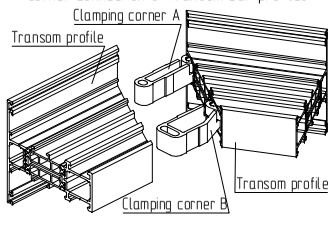

Article	Clamping corner A	Clamping corner B
AYPC.W72.0301	AYPC.W62.0982	AYPC.W62.0984
AYPC.W72.0302	AYPC.W62.0982-01	AYPC.W62.0984-01
AYPC.W72.0303	AYPC.W62.0982-02	AYPC.W62.0984-02

Profile machining for corner connection with pins

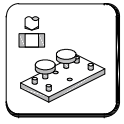
AYPC.W72.1981

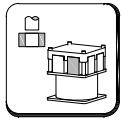
PW72.4

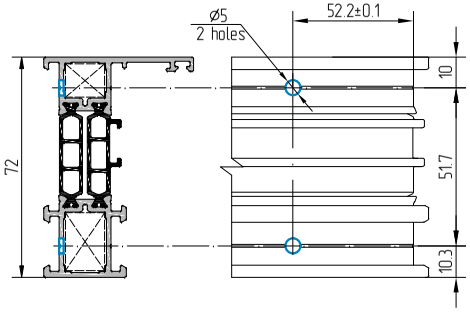

AYPC.W72.0101,
AYPC.W72.0102,
AYPC.W72.0103

Option 1. Machining for extruded clamping corner

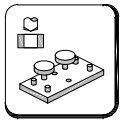
AYPC.W72.1987

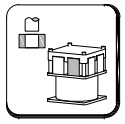
PW72.5

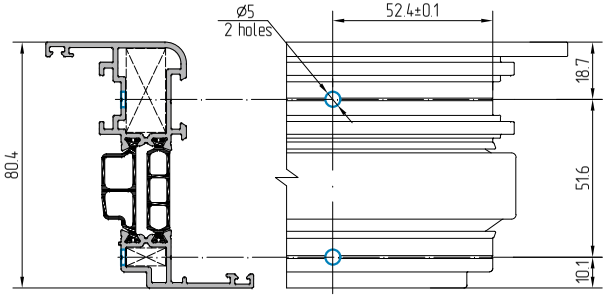

AYPC.W72.0201,
AYPC.W72.0202,
AYPC.W72.0221,
AYPC.W72.0222

Option 2. Machining for casted clamping corner

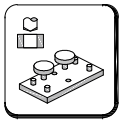
AYPC.W72.1987

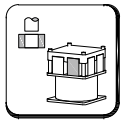
PW72.5

AYPC.W72.0203,
AYPC.W72.0223

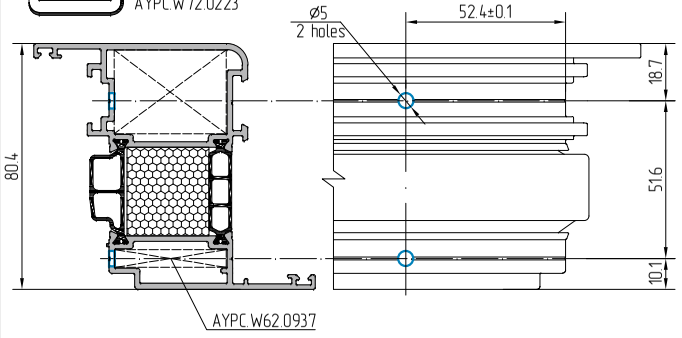

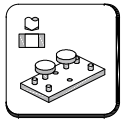
AYPC.W72.1988

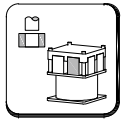
PW72.5

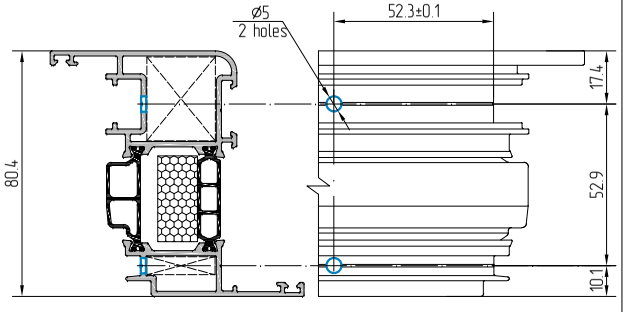

AYPC.W72.0212

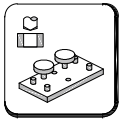
AYPC.W72.1981

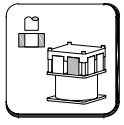
PW72.4

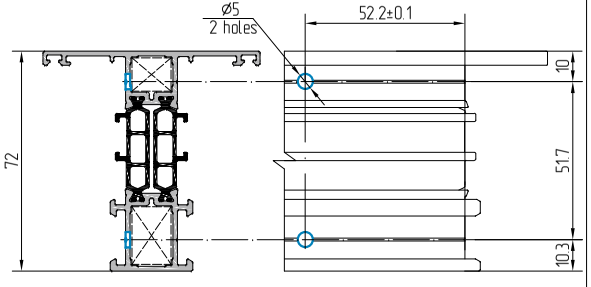

AYPC.W72.0301,
AYPC.W72.0302,
AYPC.W72.0303

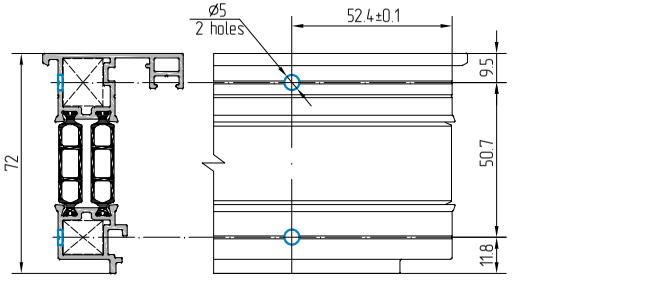

AYPC.W72.0815

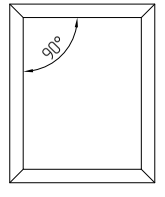

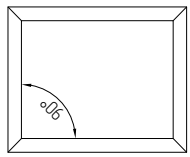

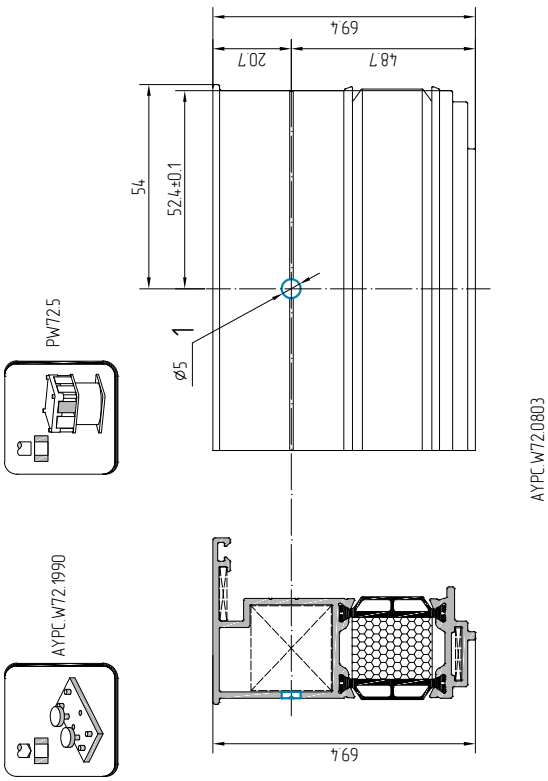

Profile machining for corner connection with pins

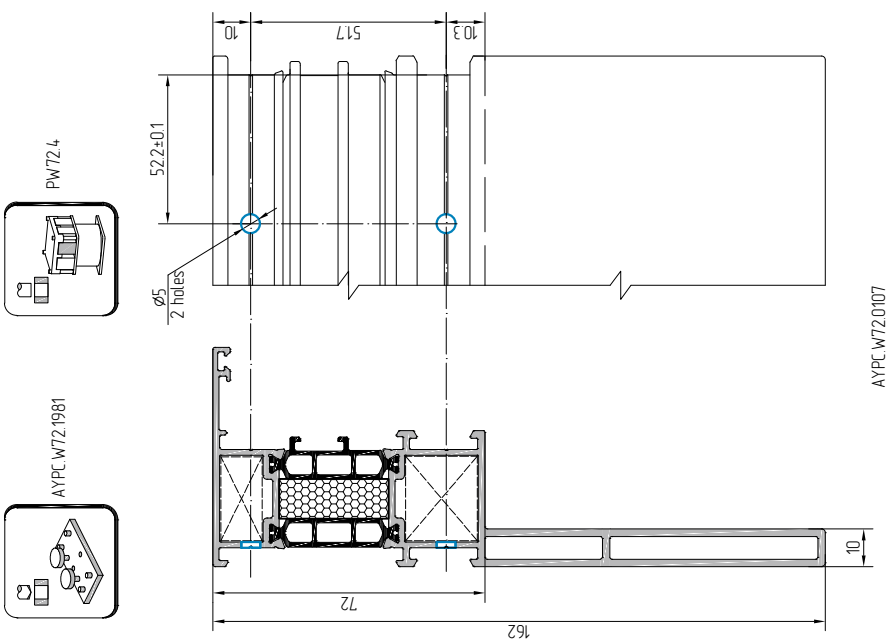

Data for corner connection by crimping

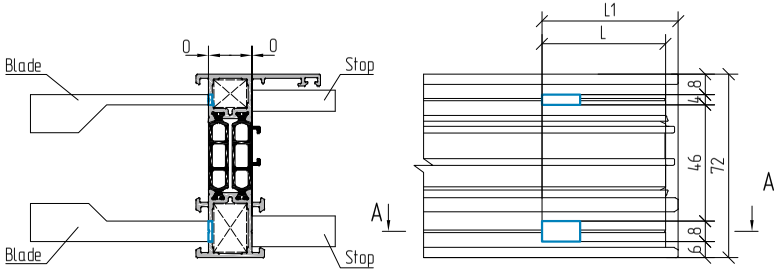

Profile		
Article	L, mm	L1, mm
AYPC.W72.0101	49.6	54.6
AYPC.W72.0102 AYPC.W72.0103	49.0	54.0

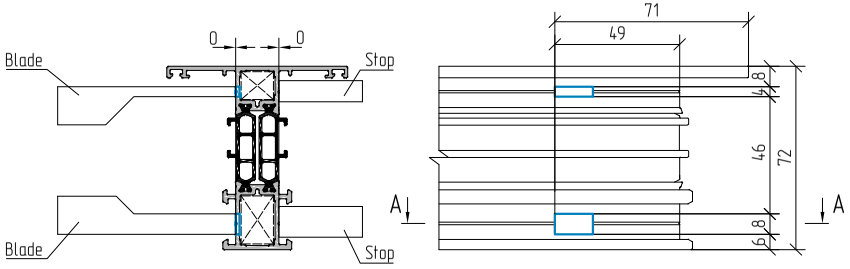

AYPC.W72.0301
AYPC.W72.0302
AYPC.W72.0303

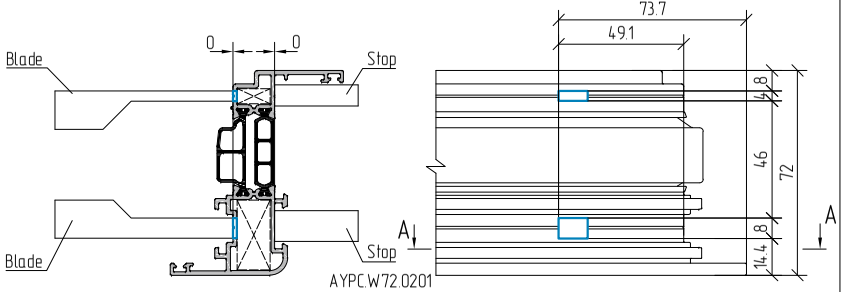

AYPC.W72.0201
AYPC.W72.0202
AYPC.W72.0203
AYPC.W72.0221
AYPC.W72.0222
AYPC.W72.0223

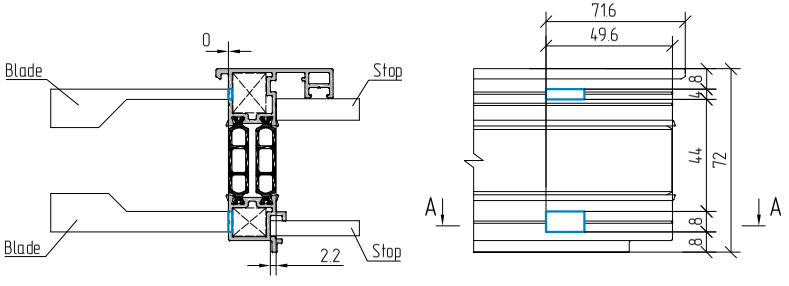

AYPC.W72.0815

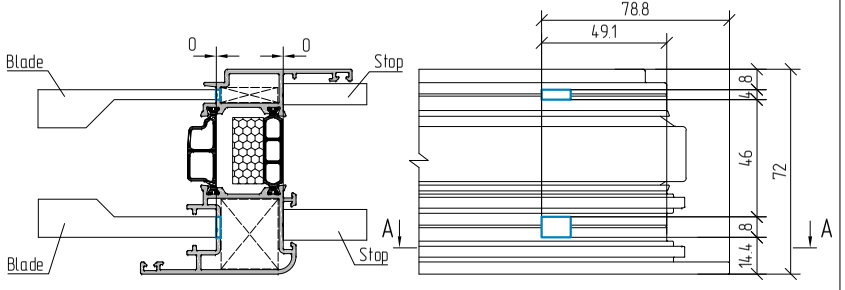

AYPC.W72.0212

Stop is shown schematically and depends on the used tools

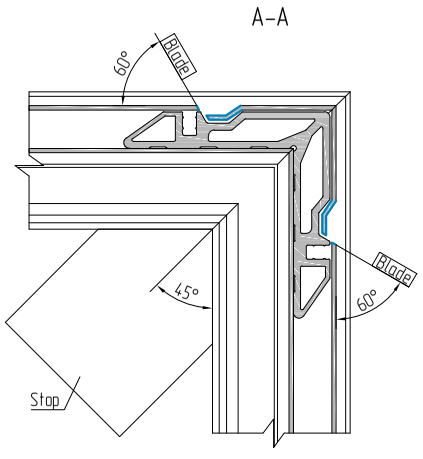

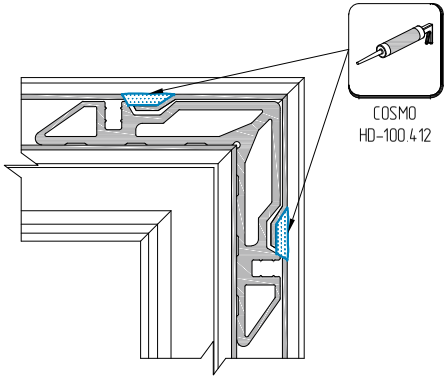

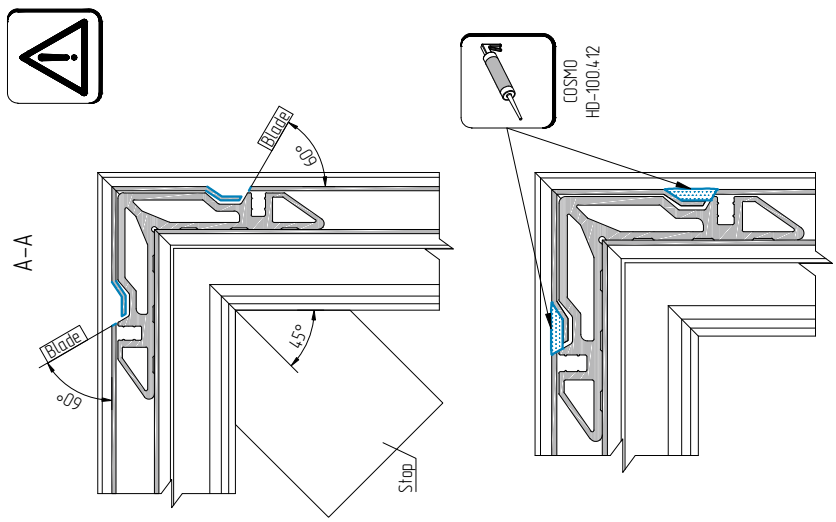

Profile machining for corner connection by crimping

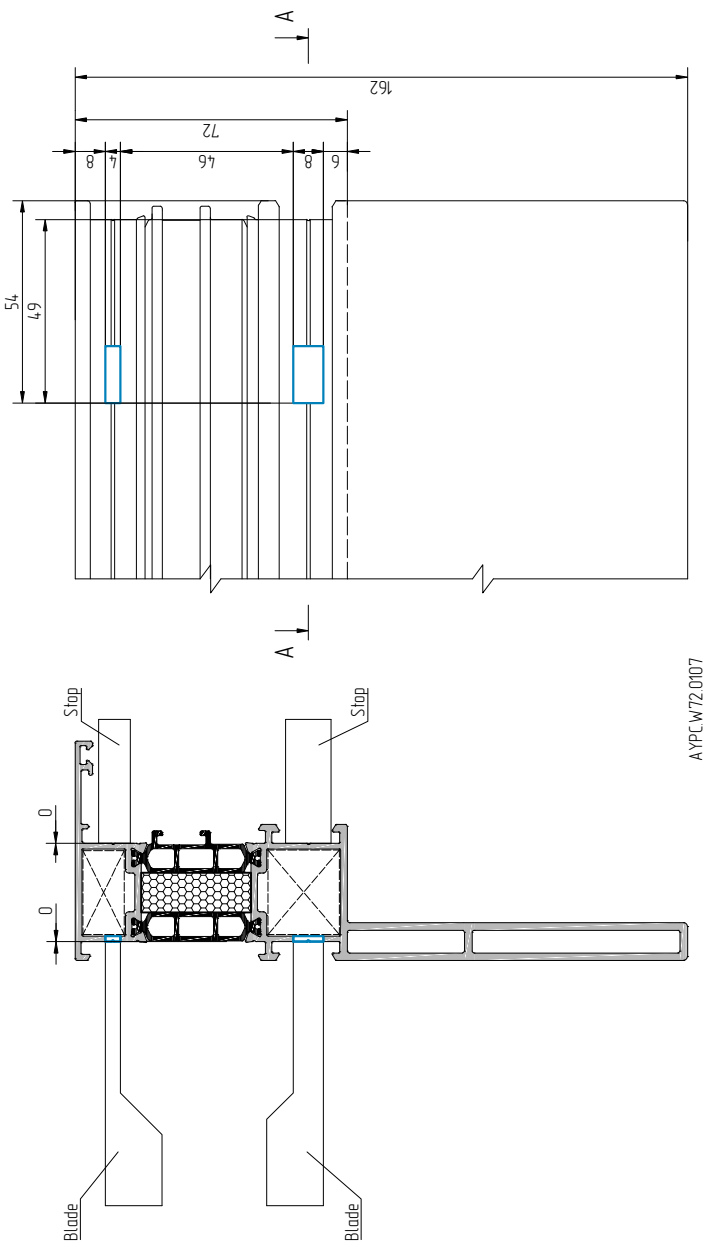

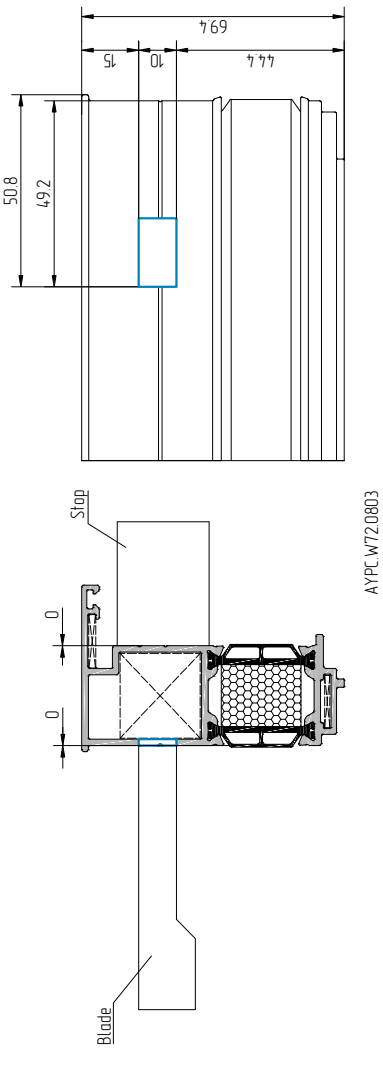

Stop is shown schematically and depends on the used tools

Corner connection of AYPC.W72.0101 profiles with the use of AYPC.W62.0960-01 pivot clamping corners and 5x10 pins

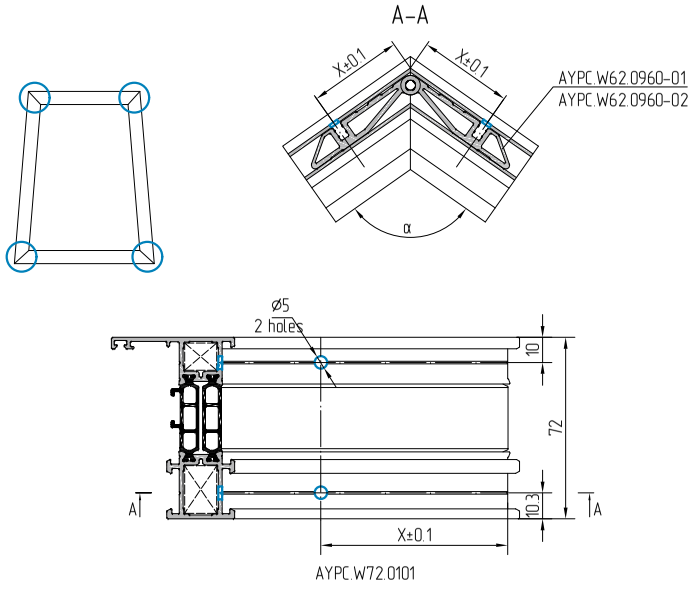

AYPC.W72.0101

α°	X, mm
30	71.3
35	67.3
40	64.3
45	61.9
50	60.0
55	58.4
60	57.1
65	55.9
70	54.9
75	54.0
80	53.2
85	52.5
90	51.8
95	51.2
100	50.7
105	50.2
110	49.7
115	49.2
120	48.8
125	48.4
130	48.0
135	47.7
140	47.3
145	47.0
150	46.6

Corner connection of AYPC.W72.0301 profiles with the use of AYPC.W62.0960-01, AYPC.W62.0960-02 pivot clamping corners and 5x10 pins

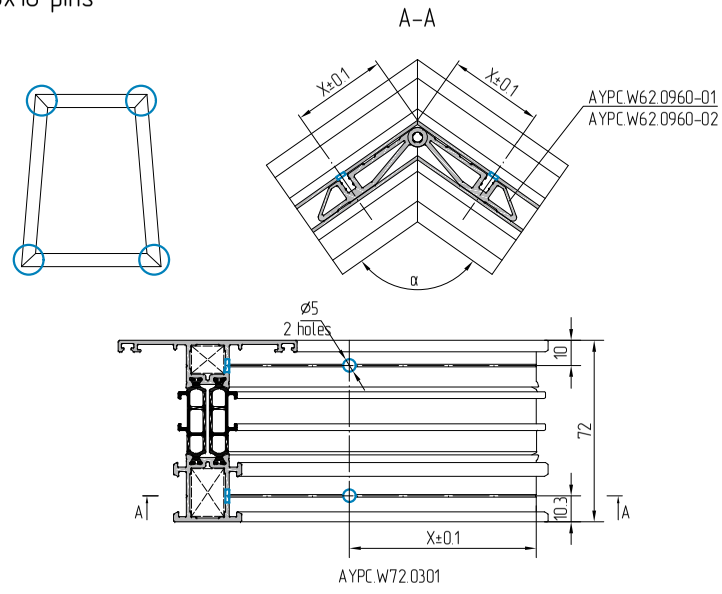

AYPC.W72.0301

α°	X, mm
30	71.3
35	67.3
40	64.3
45	61.9
50	60.0
55	58.4
60	57.1
65	55.9
70	54.9
75	54.0
80	53.2
85	52.5
90	51.8
95	51.2
100	50.7
105	50.2
110	49.7
115	49.2
120	48.8
125	48.4
130	48.0
135	47.7
140	47.3
145	47.0
150	46.6

Corner connection of AYPC.W72.0201 and AYPC.W72.0221 profiles with the use of AYPC.W62.0960, AYPC.W62.0960-03 pivot clamping corners and 5x10 pins.

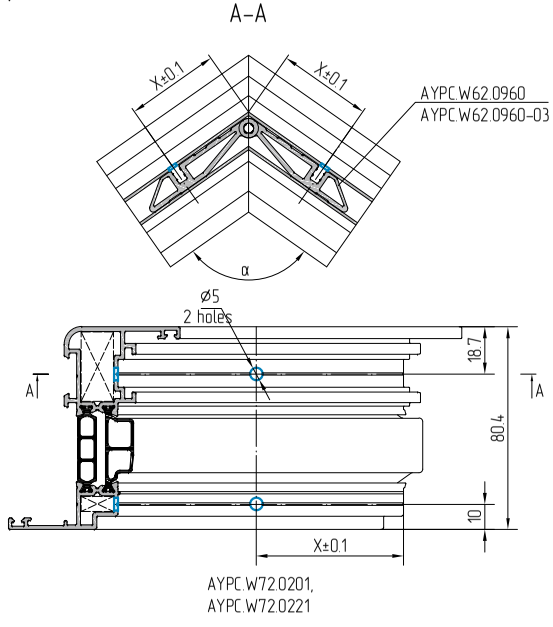

AYPC.W72.0201,
AYPC.W72.0221

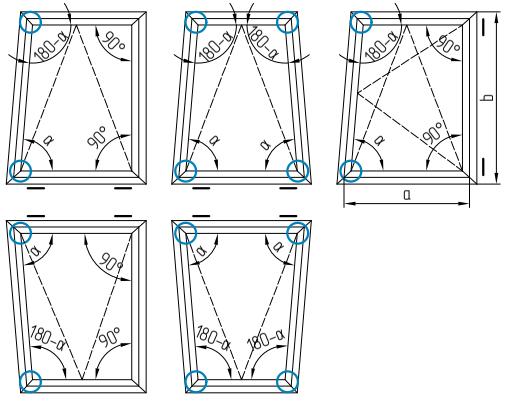

α°	X, mm
80	53.1
85	52.4
90	51.7
95	51.2
100	50.6
105	50.1
110	49.6
115	49.2
120	48.8
125	48.4
130	48.0
135	47.6
140	47.3
145	46.9
150	46.6

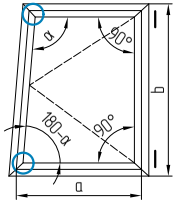

Providing that the width of the sash "a" is not more than half height of the frame "b". If the hardware can be installed

α°	X, mm
30	71.0
35	67.0
40	64.0
45	61.7
50	59.8
55	58.2
60	56.9
65	55.8
70	54.8
75	53.9
80	53.1
85	52.4
90	51.7
95	51.2
100	50.6
105	50.1
110	49.6
115	49.2
120	48.8
125	48.4
130	48.0
135	47.6
140	47.3
145	46.9
150	46.6

Corner connection of AYPC.W72.0102 profiles with the use of AYPC.W62.0962-01, AYPC.W62.0962-02 pivot clamps and 5x10 pins

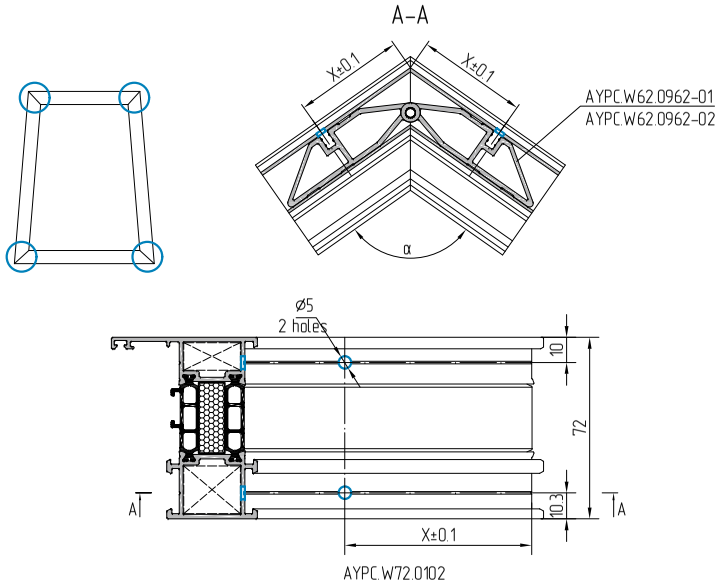

α°	X, mm
30	115.0
35	104.5
40	96.5
45	90.2
50	85.1
55	80.9
60	77.3
65	74.3
70	71.6
75	69.3
80	67.2
85	65.3
90	63.5
95	62.0
100	60.5
105	59.2
110	57.9
115	56.7
120	55.6
125	54.5
130	53.5
135	52.5
140	51.6
145	50.6
150	49.7

Corner connection of AYPC.W72.0302 profiles with the use of AYPC.W62.0962-01, AYPC.W62.0962-02 pivot clamps and 5x10 pins

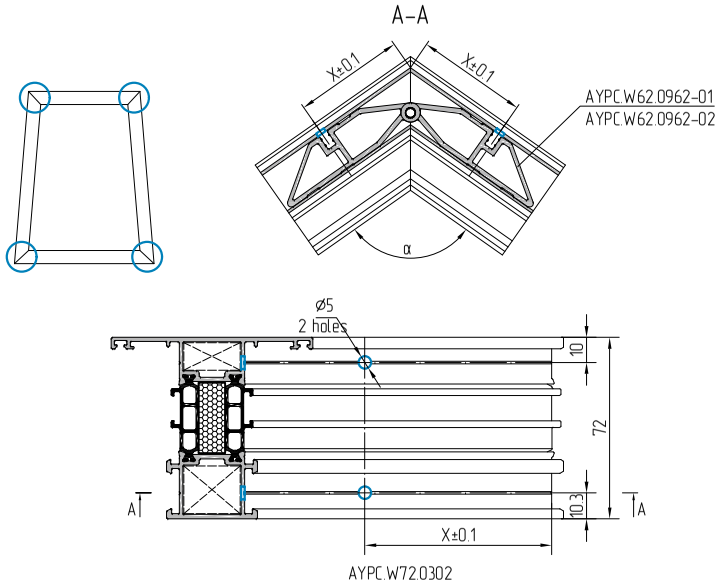

α°	X, mm
30	115.0
35	104.5
40	96.5
45	90.2
50	85.1
55	80.9
60	77.3
65	74.3
70	71.6
75	69.3
80	67.2
85	65.3
90	63.5
95	62.0
100	60.5
105	59.2
110	57.9
115	56.7
120	55.6
125	54.5
130	53.5
135	52.5
140	51.6
145	50.6
150	49.7

Corner connection of AYPC.W72.0202 and AYPC.W72.0222 profiles with the use of AYPC.W62.0962, AYPC.W62.0962-03 pivot clamps and 5x10 pins

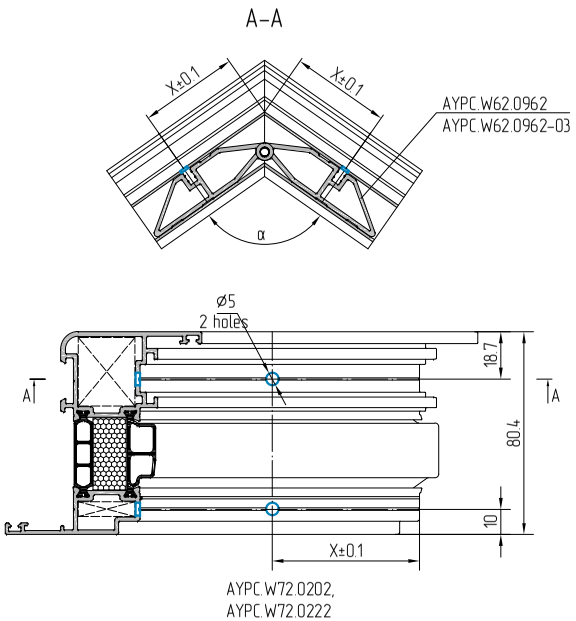

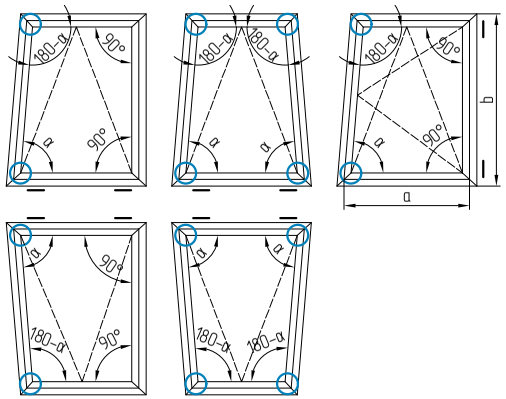

α°	X, mm
80	67.4
85	65.5
90	63.7
95	62.1
100	60.7
105	59.3
110	58.0
115	56.8
120	55.7
125	54.6
130	53.6
135	52.6
140	51.6
145	50.7
150	49.8

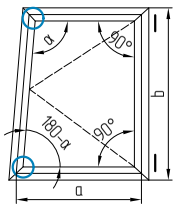

α°	X, mm
30	115.8
35	105.1
40	97.0
45	90.7
50	85.5
55	81.3
60	77.7
65	74.6
70	71.9
75	69.5
80	67.4
85	65.5
90	63.7
95	62.1
100	60.7
105	59.3
110	58.0
115	56.8
120	55.7
125	54.6
130	53.6
135	52.6
140	51.6
145	50.7
150	49.8

Providing that the width of the sash "a" is not more than half height of the frame "b". If the hardware can be installed

Profile machining for corner connection by using pins

Profile		
Article	L1, mm	L2, mm
AYPC.W72.0101	28.6±0.1	27.8±0.1
AYPC.W72.0102	28.4±0.1	27.9±0.1
AYPC.W72.0103, AYPC.W72.0106	28.3±0.1	27.8±0.1

Profile		
Article	L1, mm	L2, mm
AYPC.W72.0301	28.6±0.1	27.8±0.1
AYPC.W72.0302	28.4±0.1	27.9±0.1
AYPC.W72.0303	28.3±0.1	27.8±0.1

Profile		
Article	L1, mm	L2, mm
AYPC.W72.0101	28.2±0.1	25.8±0.1
AYPC.W72.0102	28.0±0.1	26.1±0.1
AYPC.W72.0103, AYPC.W72.0106	28.2±0.1	26.1±0.1

Profile		
Article	L1, mm	L2, mm
AYPC.W72.0301	28.2±0.1	25.8±0.1
AYPC.W72.0302	28.0±0.1	26.1±0.1
AYPC.W72.0303	28.2±0.1	26.1±0.1

Profile machining for corner connection with pins

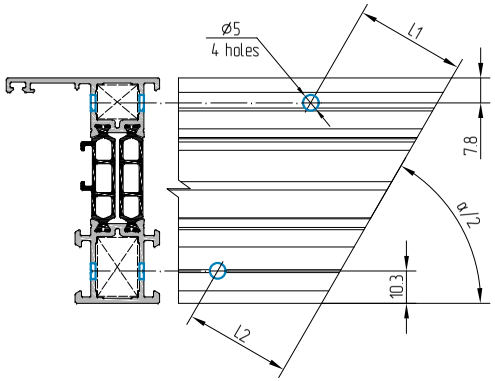

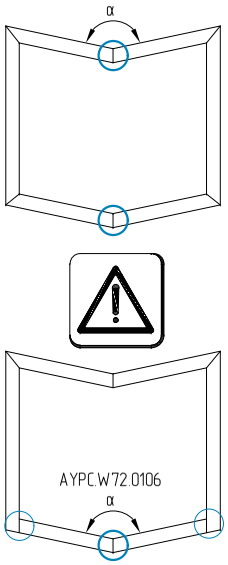

Angle α, °	AYPC.W72.0101		AYPC.W72.0102		AYPC.W72.0103, AYPC.W72.0106	
	L1	L2	L1	L2	L1	L2
90	28.6	26.1	28.6	26.2	28.6	26.2
95	29.8	27.5	29.8	27.6	29.8	27.6
100	31.0	28.9	31.0	29.0	31.0	29.0
105	32.1	30.3	32.1	30.3	32.1	30.3
110	33.2	31.6	33.2	31.6	33.2	31.6
115	34.2	32.8	34.2	32.8	34.2	32.8
120	35.1	33.9	35.1	34.0	35.1	34.0
125	36.0	35.0	36.0	35.1	36.0	35.1
130	36.8	36.1	36.8	36.1	36.8	36.1
135	37.5	37.0	37.5	37.1	37.5	37.1
140	38.1	37.9	38.1	37.9	38.1	37.9
145	38.7	38.7	38.7	38.7	38.7	38.7
150	39.2	39.5	39.2	39.5	39.2	39.5
155	39.7	40.1	39.7	40.2	39.7	40.2
160	40.0	40.7	40.0	40.7	40.0	40.7
165	40.3	41.2	40.3	41.2	40.3	41.2
170	40.5	41.7	40.5	41.7	40.5	41.7
175	40.6	42.0	40.6	42.0	40.6	42.0
180	40.7	42.3	40.7	42.3	40.7	42.3

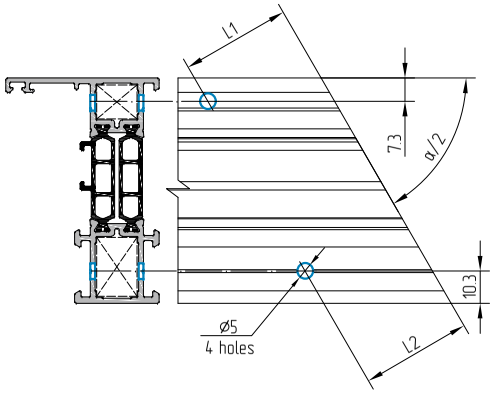

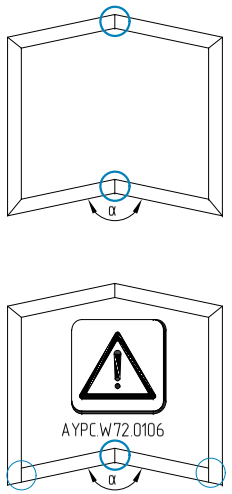

Angle α, °	AYPC.W72.0101		AYPC.W72.0102		AYPC.W72.0103, AYPC.W72.0106	
	L1	L2	L1	L2	L1	L2
90	28.6	28.0	28.6	27.9	28.6	27.9
95	29.8	29.4	29.8	29.3	29.8	29.2
100	31.0	30.7	31.0	30.6	31.0	30.5
105	32.1	31.9	32.1	31.9	32.1	31.8
110	33.2	33.1	33.2	33.0	33.2	33.0
115	34.2	34.2	34.2	34.2	34.2	34.1
120	35.1	35.3	35.1	35.2	35.1	35.2
125	36.0	36.3	36.0	36.2	36.0	36.2
130	36.8	37.2	36.8	37.2	36.8	37.1
135	37.5	38.0	37.5	38.0	37.5	38.0
140	38.1	38.8	38.1	38.8	38.1	38.8
145	38.7	39.5	38.7	39.5	38.7	39.5
150	39.2	40.2	39.2	40.1	39.2	40.1
155	39.7	40.7	39.7	40.7	39.7	40.7
160	40.0	41.2	40.0	41.2	40.0	41.2
165	40.3	41.6	40.3	41.6	40.3	41.6
170	40.5	41.9	40.5	41.9	40.5	41.9
175	40.6	42.1	40.6	42.1	40.6	42.1
180	40.7	42.3	40.7	42.3	40.7	42.3

Machining of drainage and ventilation holes in profiles

Visible drainage system

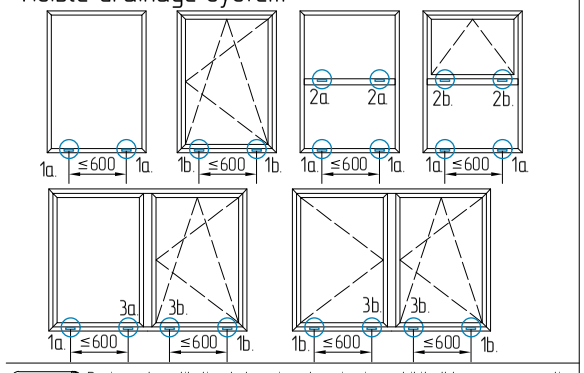

Drain and ventilation holes size changing is prohibited! Improper operating of drainage and ventilation systems is possible

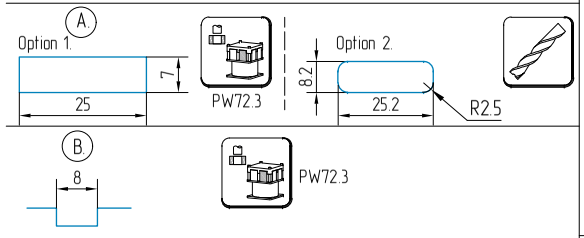

Can be done only with fixed lights.
Do not perform in the windows with active sash

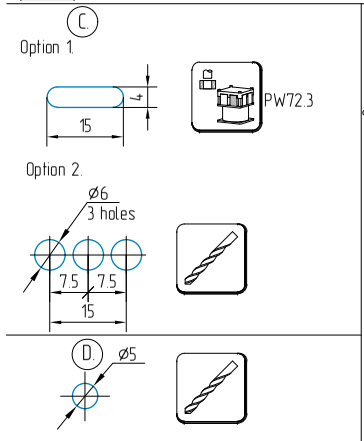

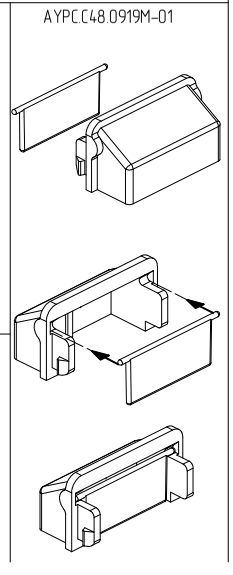

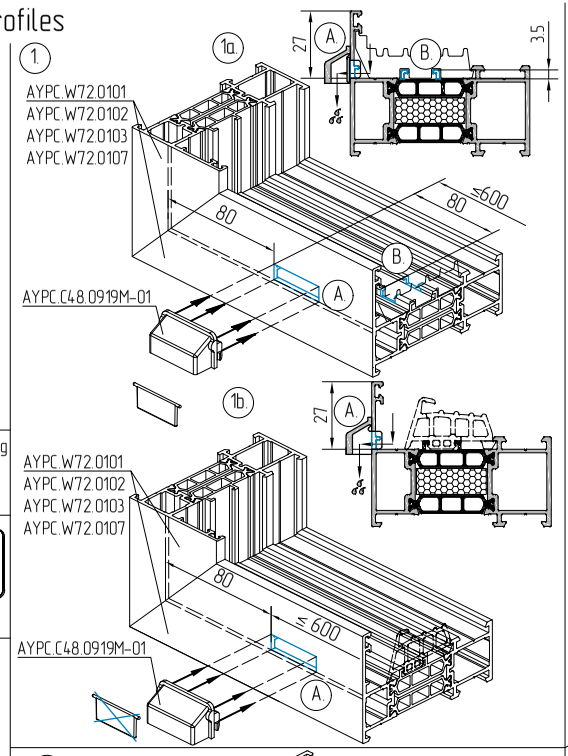

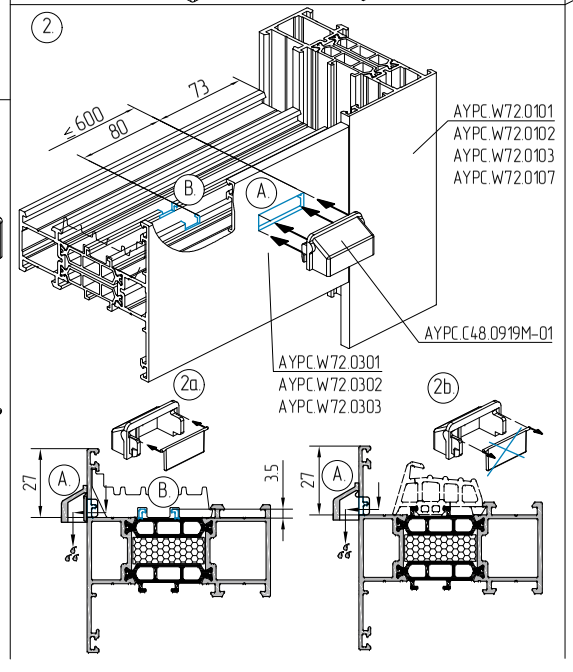

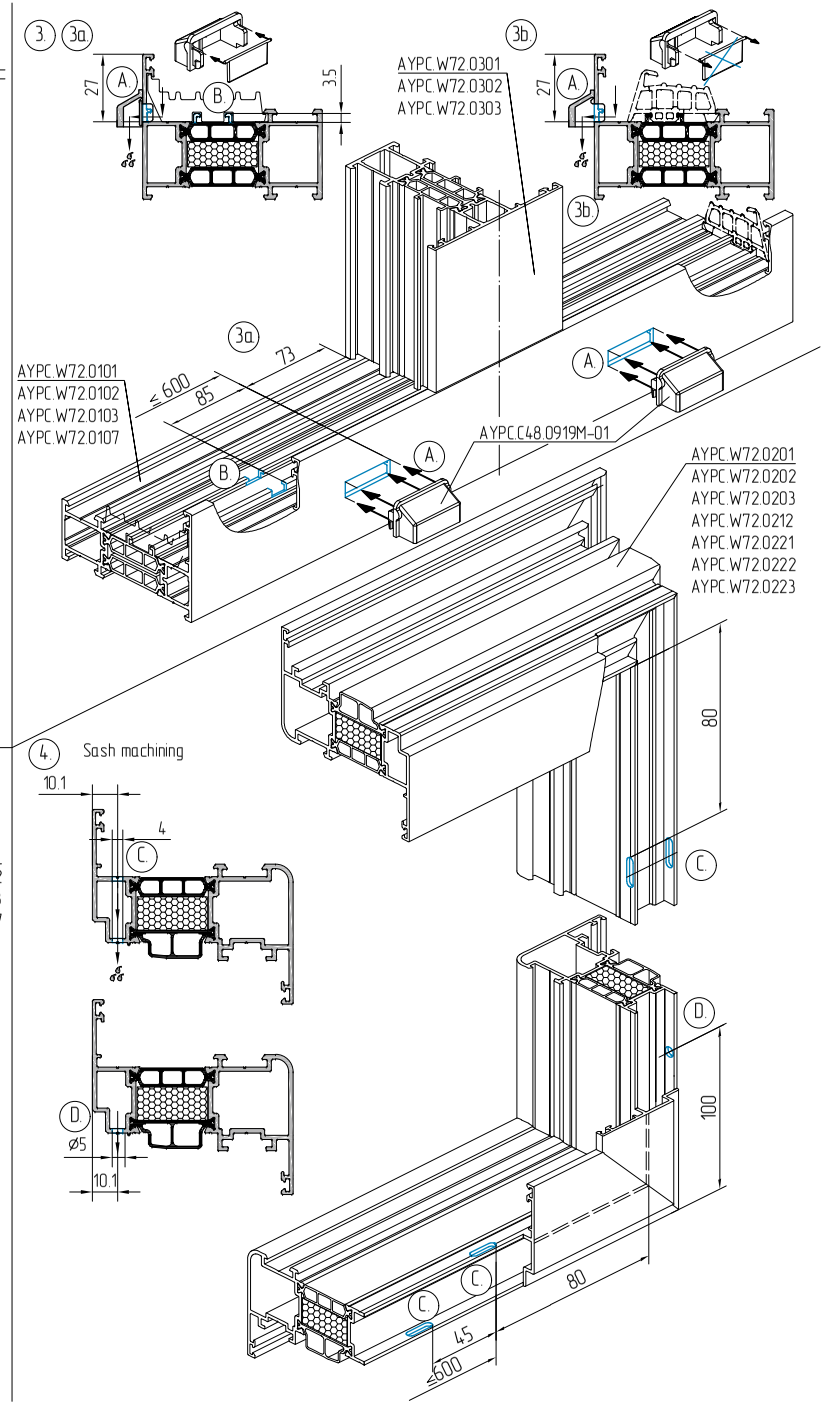

Machining of drainage holes in frame and transom bar profiles with the use of FRK101.
Visible drainage system

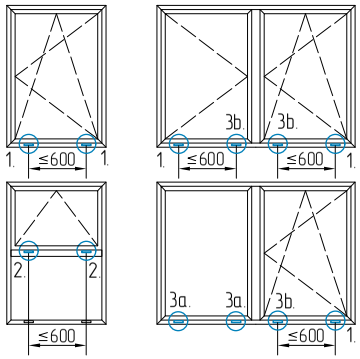

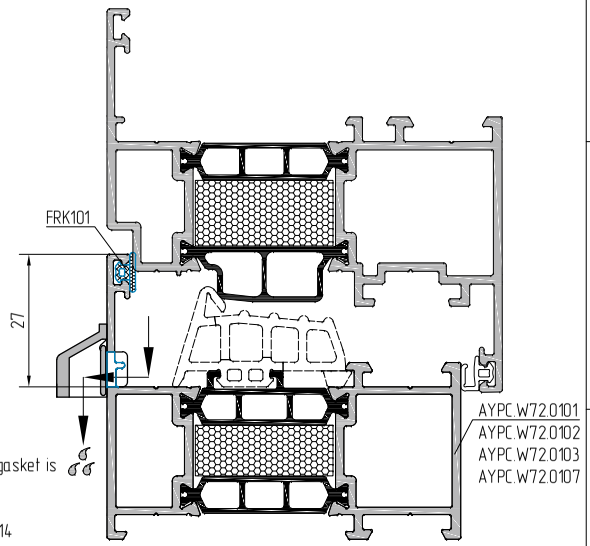

This machining is only for frame and transom bar profiles in which FRK 101 gasket is additionally installed to improve the window characteristics.
For drainage holes machining on fixed parts, please refer to page 01.07.14.
For ventilation holes machining on sash profiles, please refer to page 01.07.14

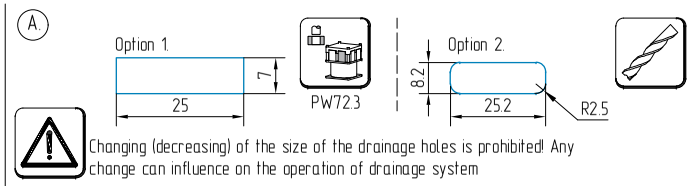

Changing (decreasing) of the size of the drainage holes is prohibited! Any change can influence on the operation of drainage system

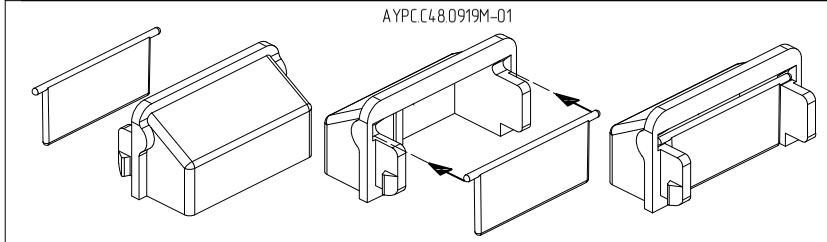

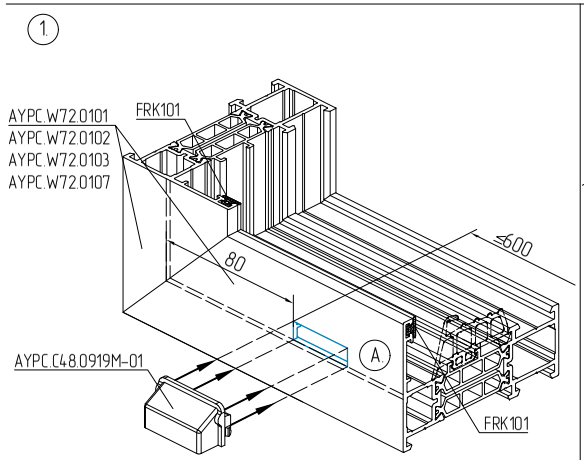

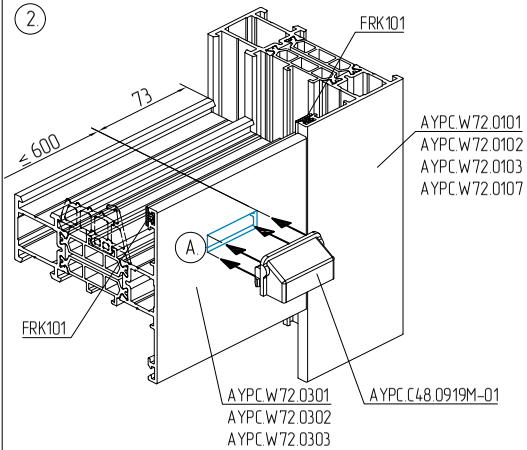

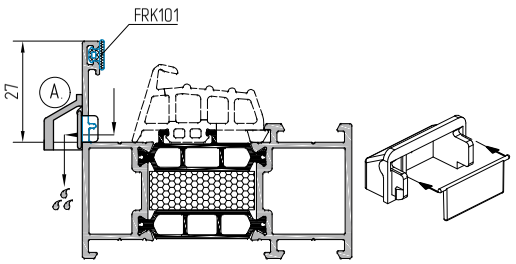

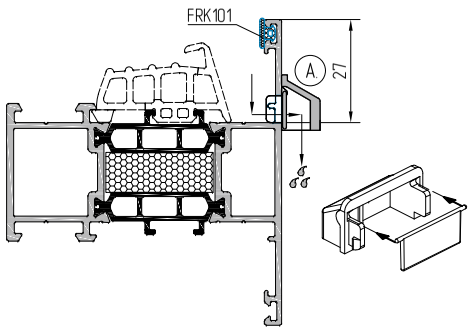

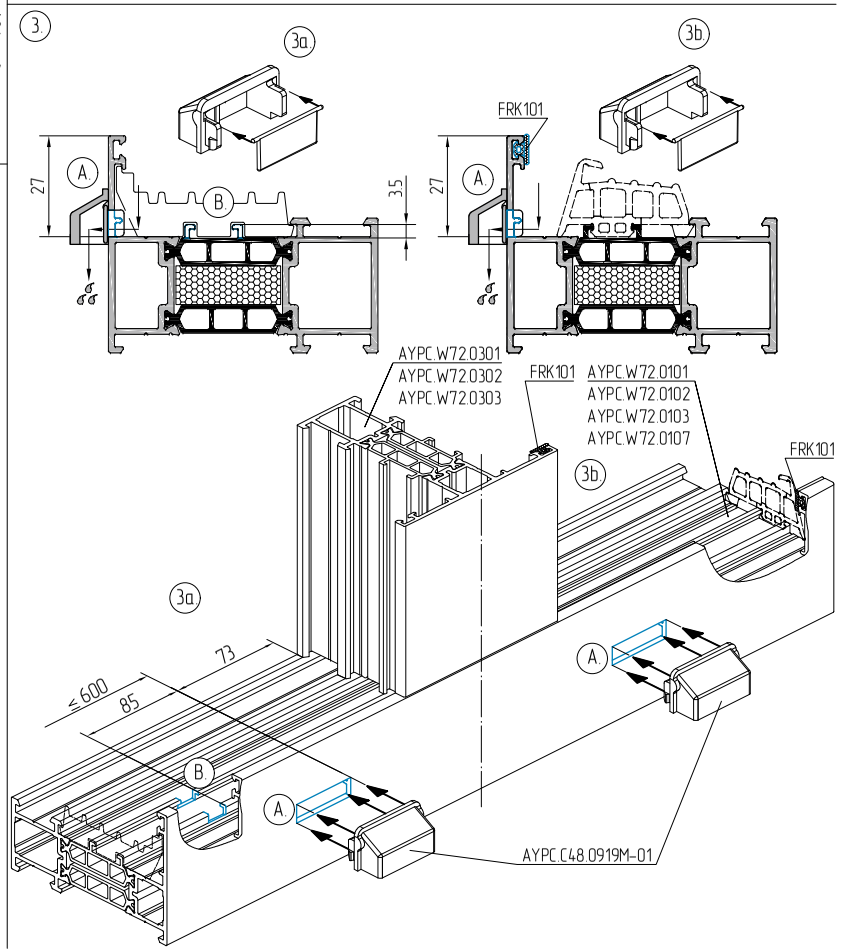

Machining of drainage and ventilation holes in profiles.
Concealed drainage system

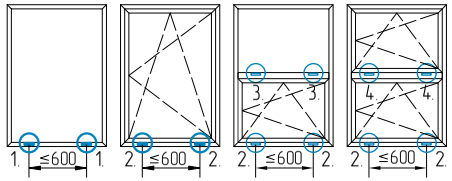

Changing of the drainage and ventilation holes size on profiles and accessories is prohibited!
Any change can influence on the operation of drainage system

A.

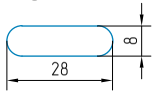

PW72.3

B.

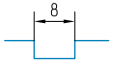

PW72.3

Can be done only with fixed lights.
Do not perform in the windows with active sash

C.

01.07.14

D.

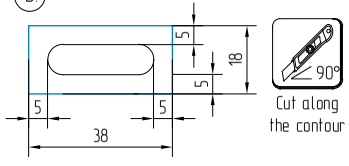

Cut along the contour

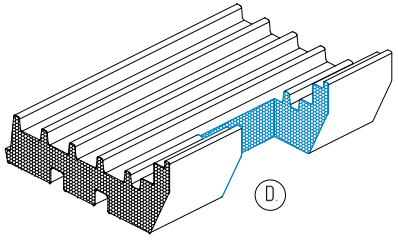

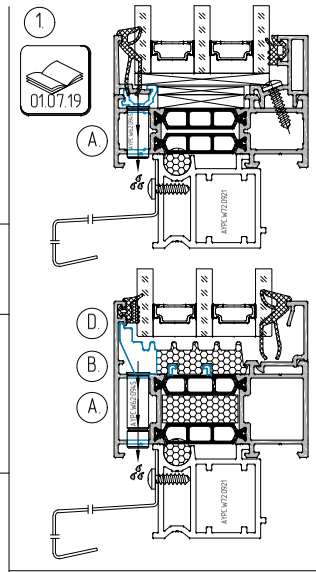

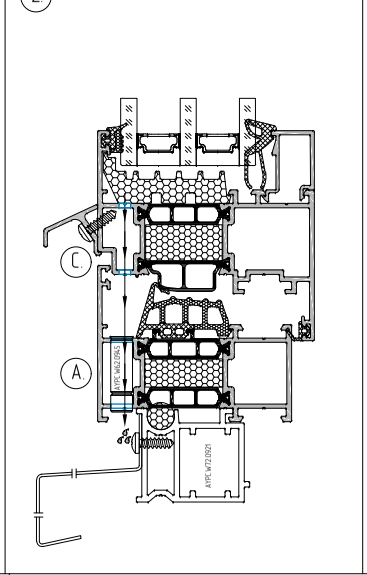

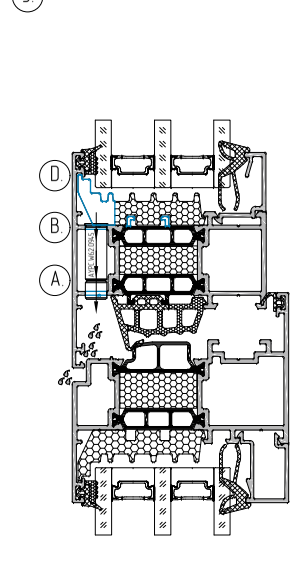

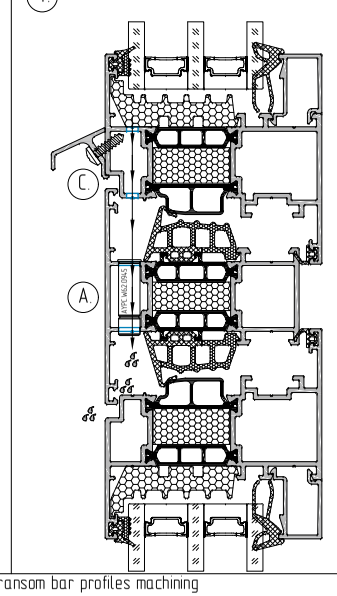

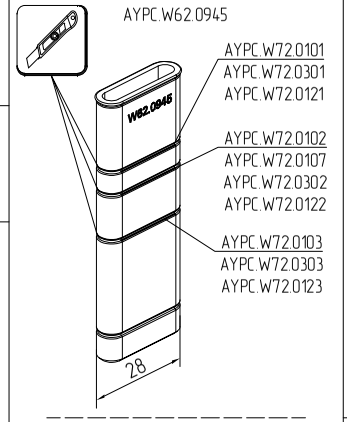

Frame profiles machining

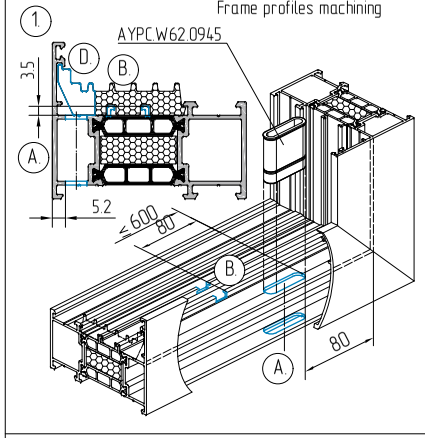

Transom bar profiles machining

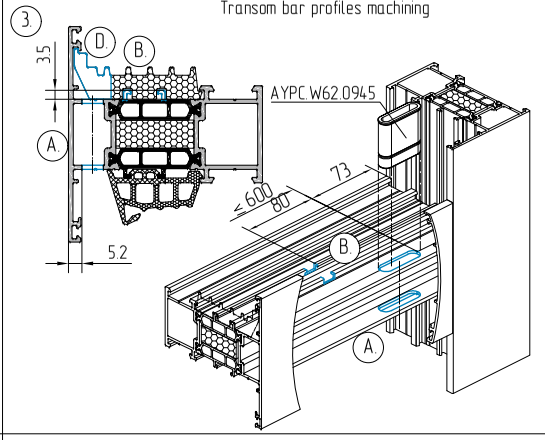

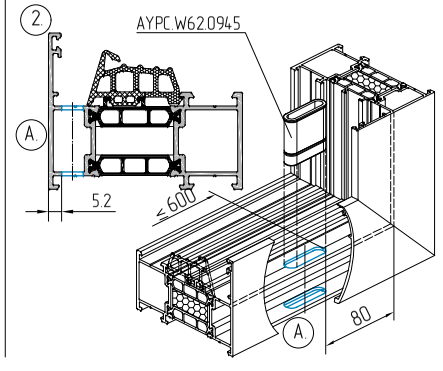

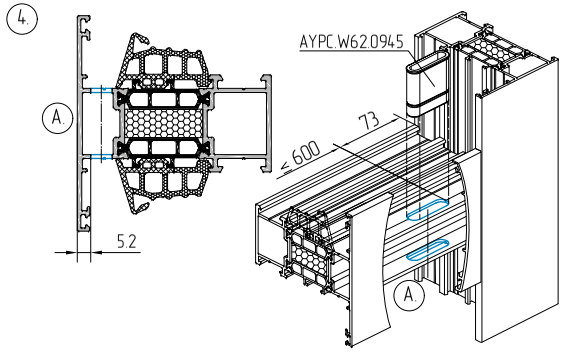

Machining of drainage and ventilation holes in profiles.
Concealed drainage system

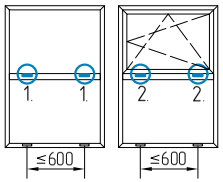

Changing of the drainage and ventilation holes size on profiles and accessories is prohibited!
Any change can influence on the operation of drainage system

A.

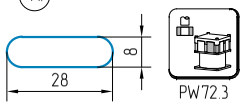

PW72.3

E.

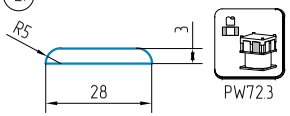

PW72.3

B.

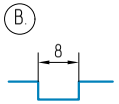

PW72.3

Can be done only with fixed lights.
Do not perform in the windows with active sash

C.

F.

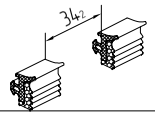

D.

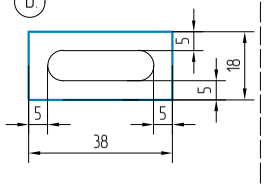

G. AYPC.W62.0946

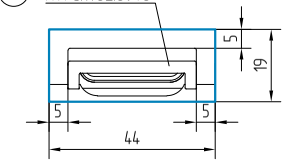

Cut along the contour

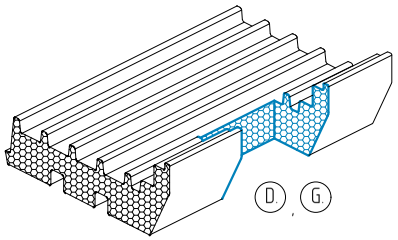

AYPC.W62.0945

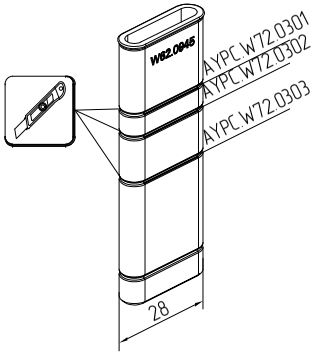

AYPC.W62.0946

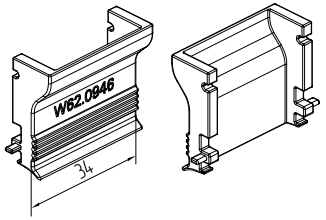

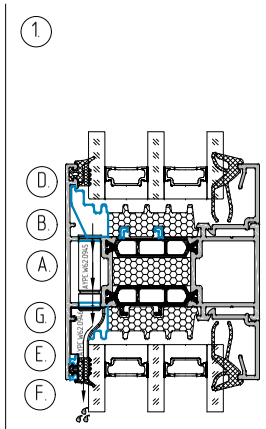

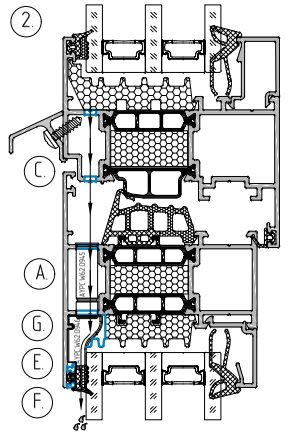

machining

Transom bar profiles

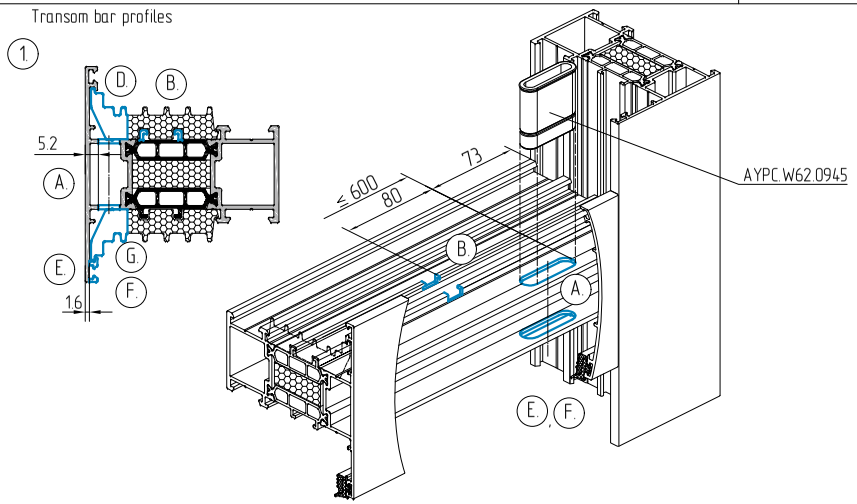

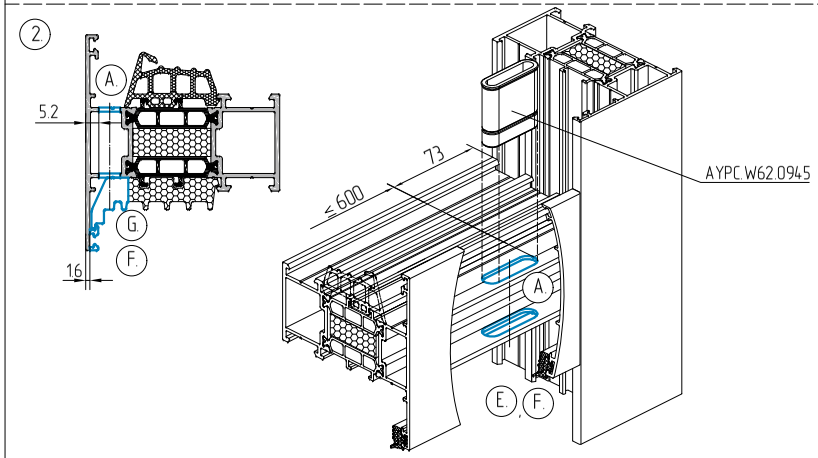

AYPC.W62.0946

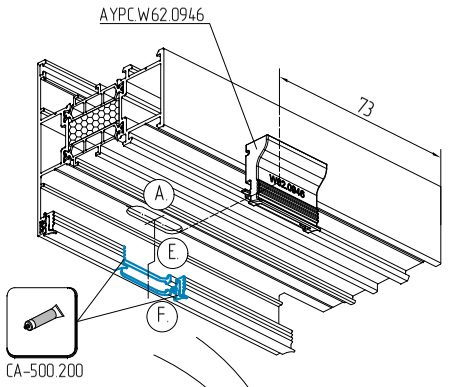

CA-500.200

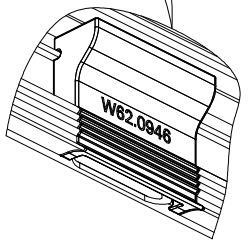

Machining of drainage and ventilation holes on AYPC.W72.0106 basement profile.
Visible drainage system

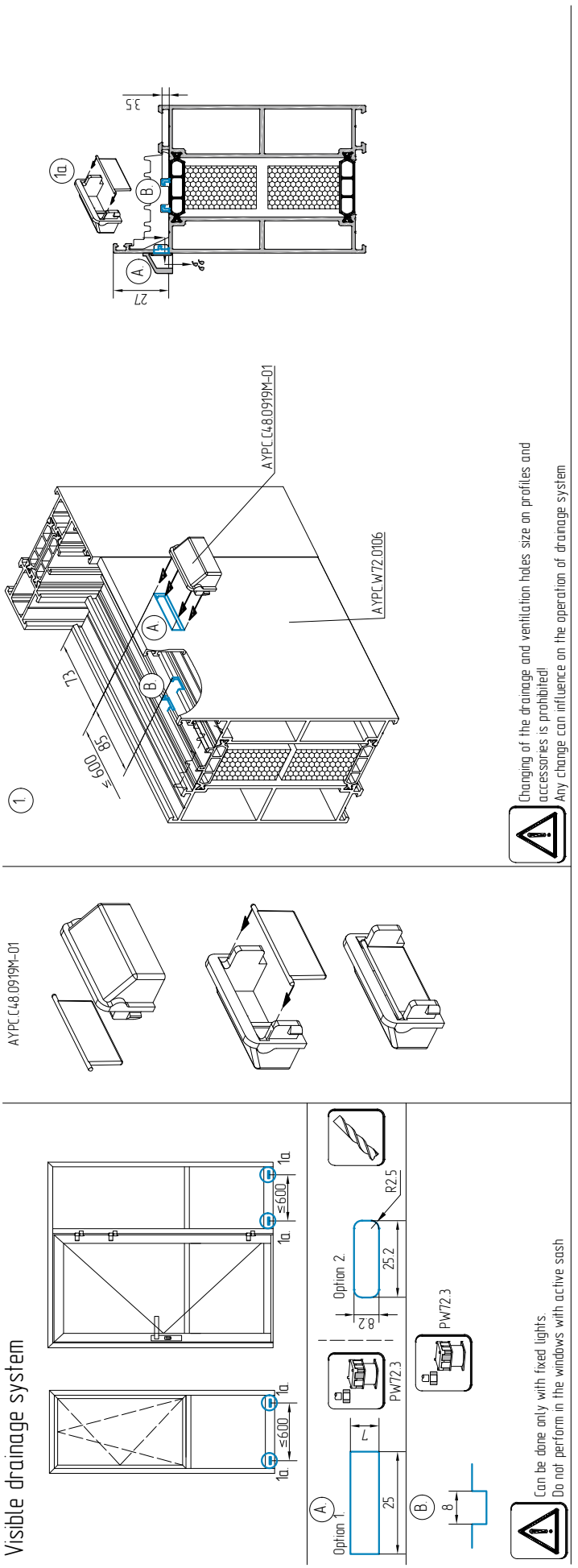

Machining of drainage and ventilation holes in profiles

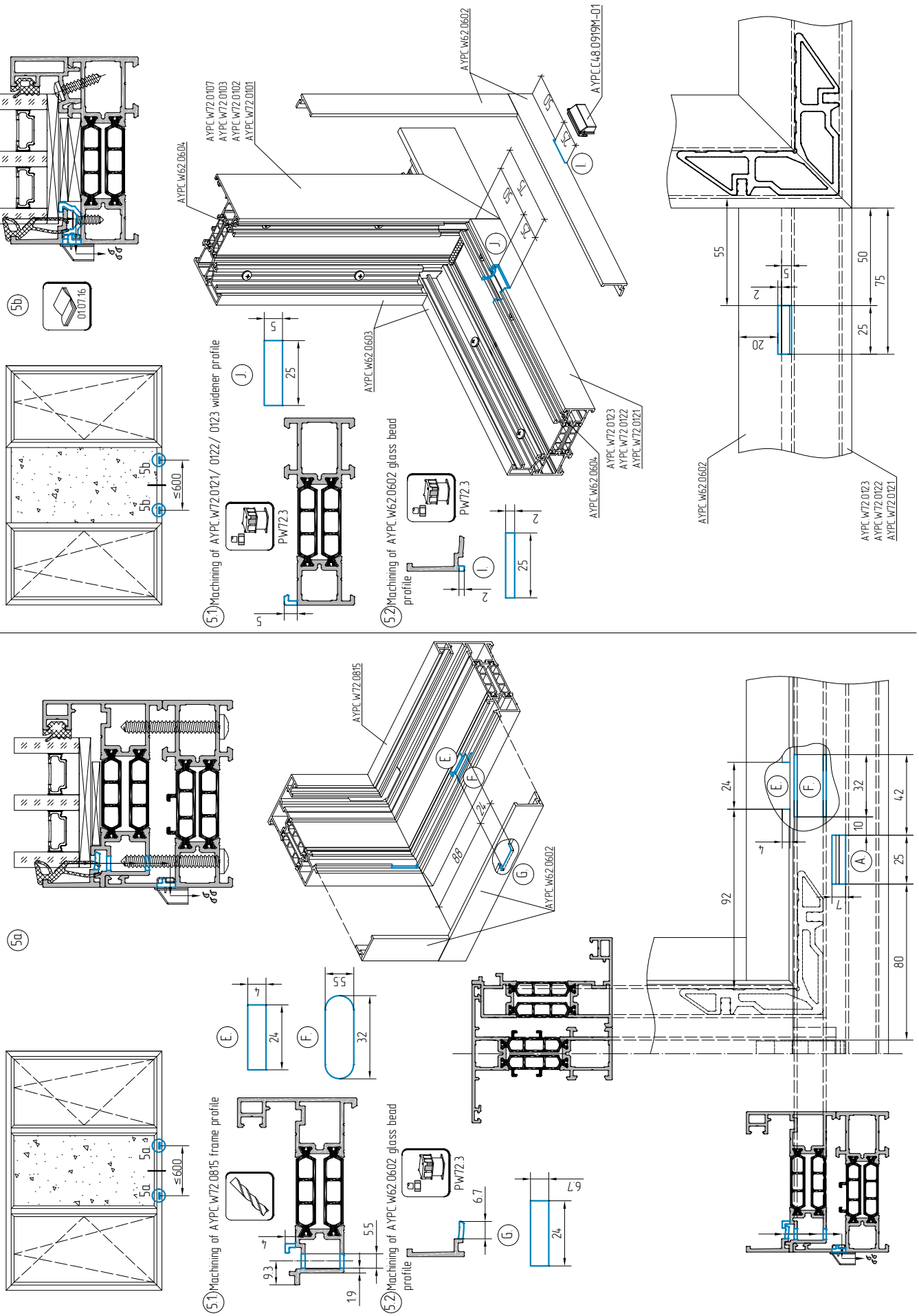

Assembly sequence of frame corner connection

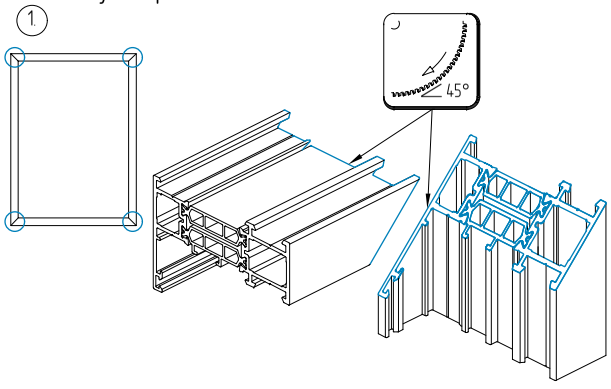

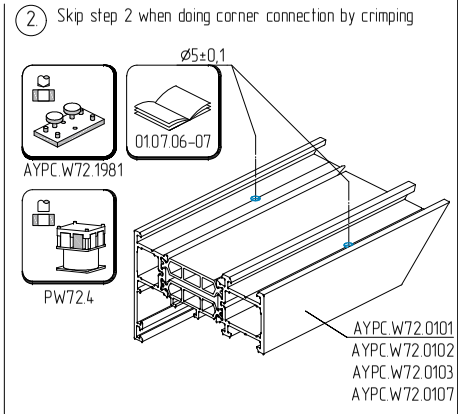

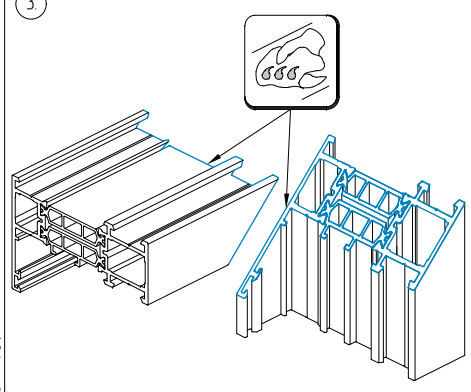

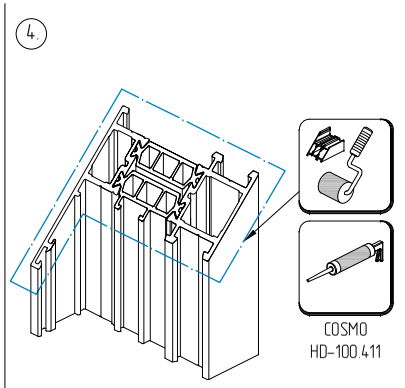

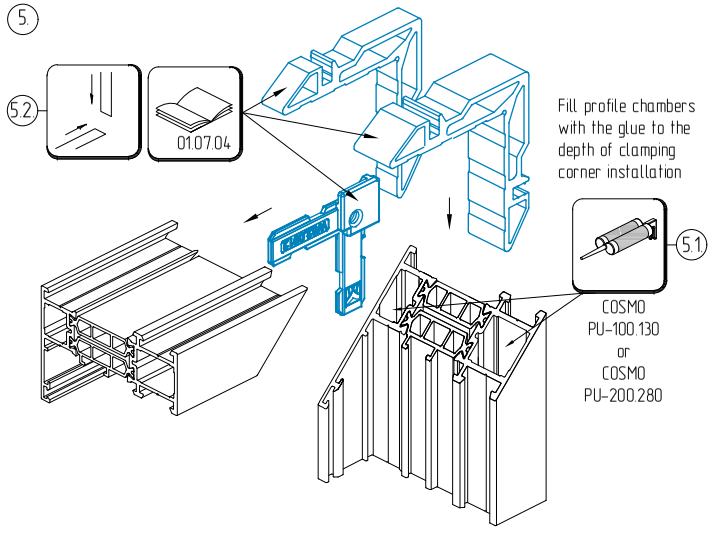

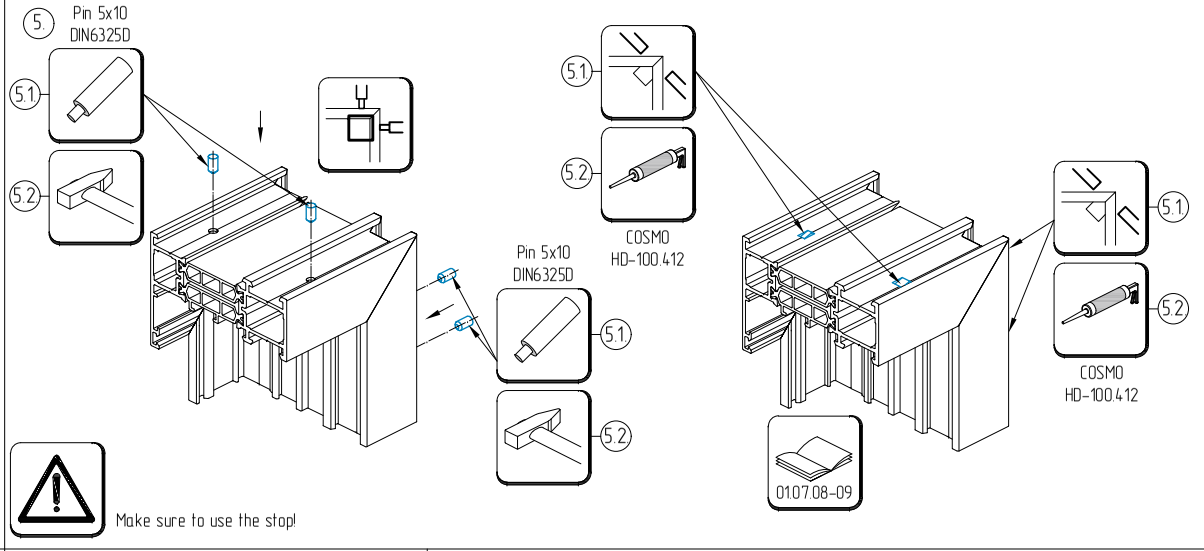

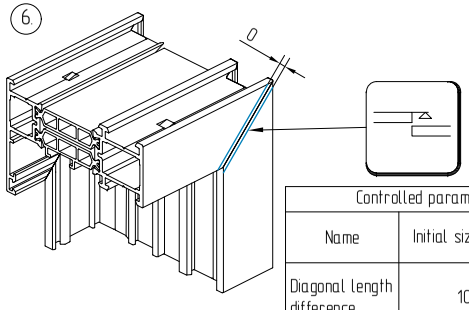

Controlled parameters of assembled item		
Name	Initial size intervals, mm	Limit deviation, mm
Diagonal length difference	≤ 1000 1000–2000 >2000	1.0 2.0 3.0

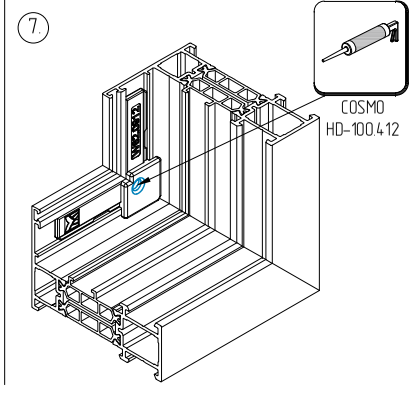

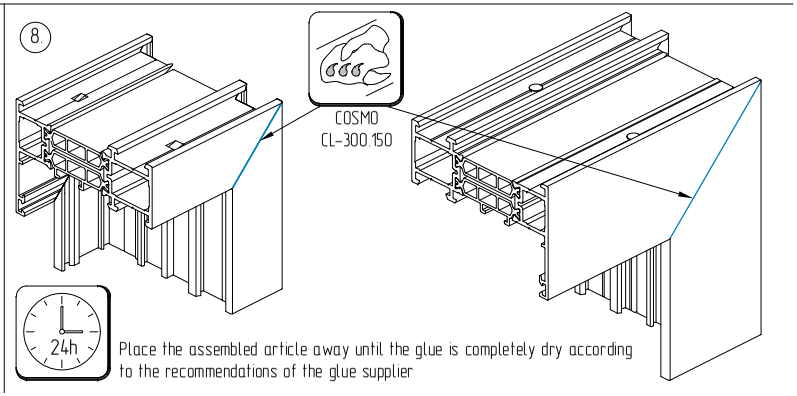

Assembly sequence of sash corner connection

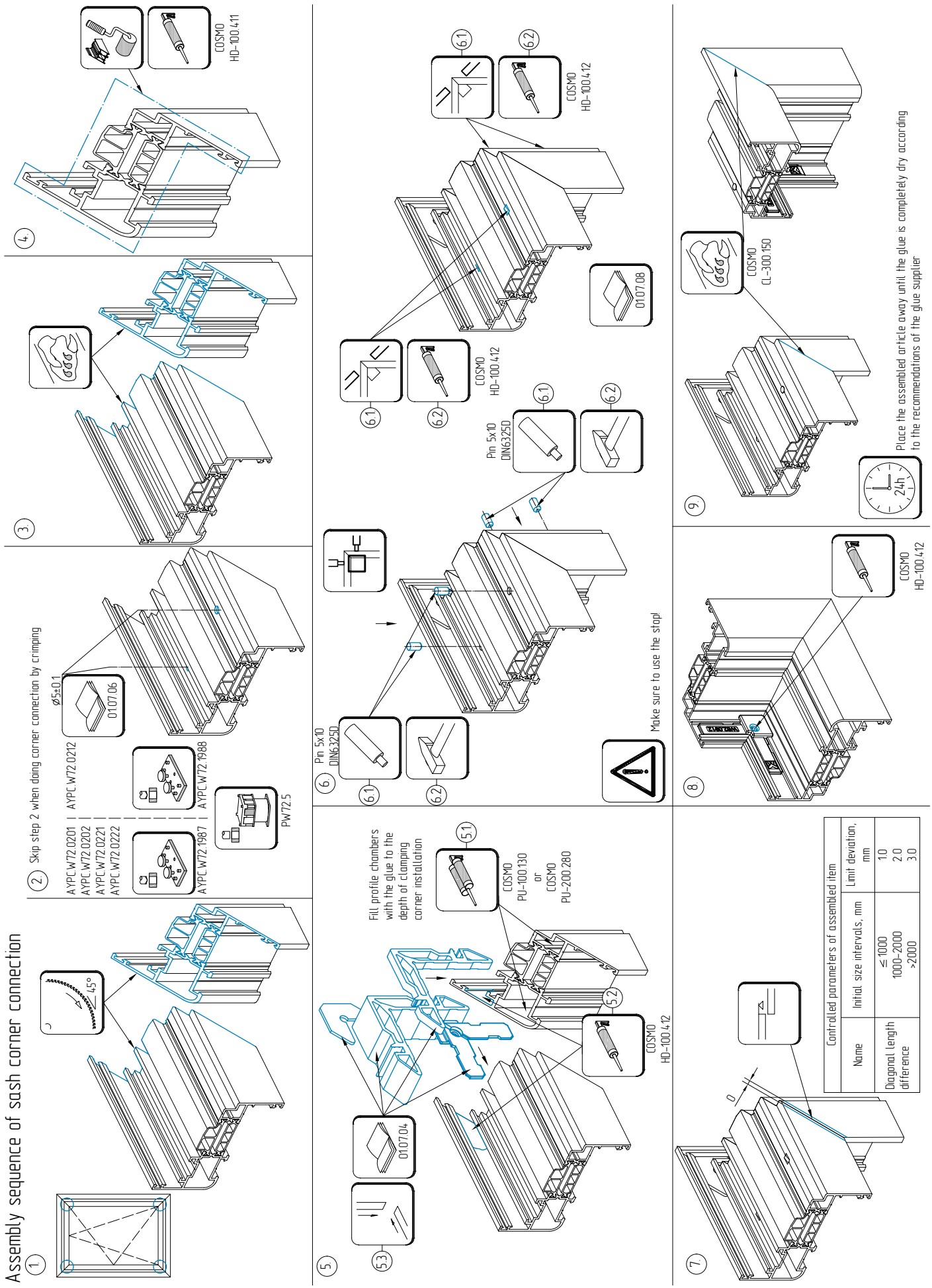

Assembly sequence of sash corner connection

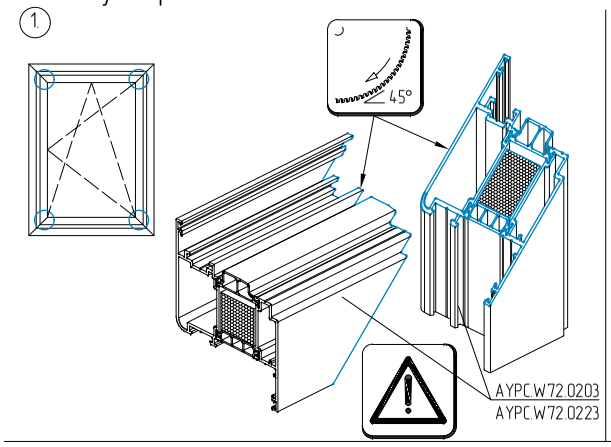

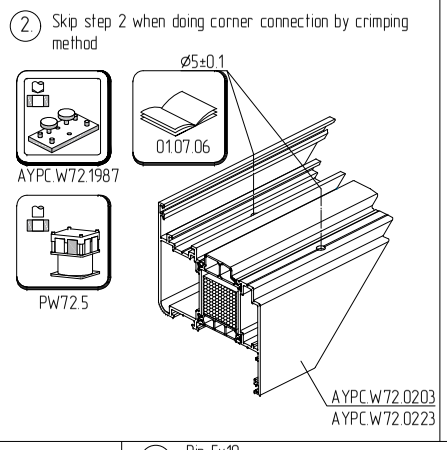

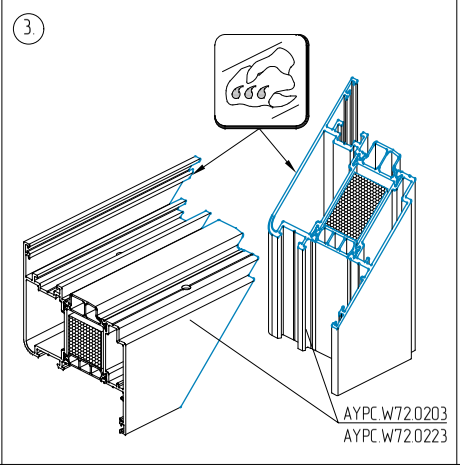

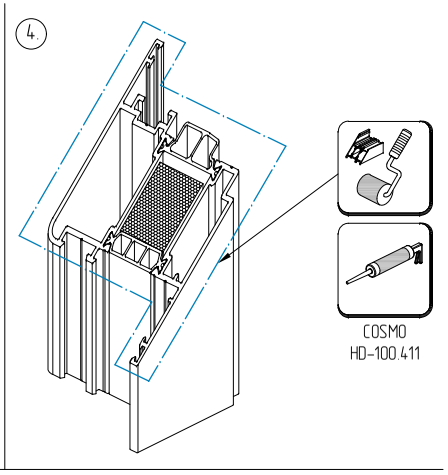

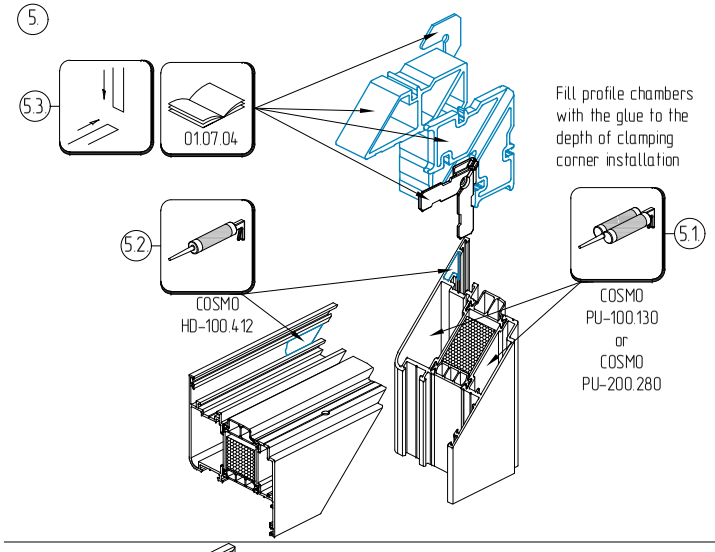

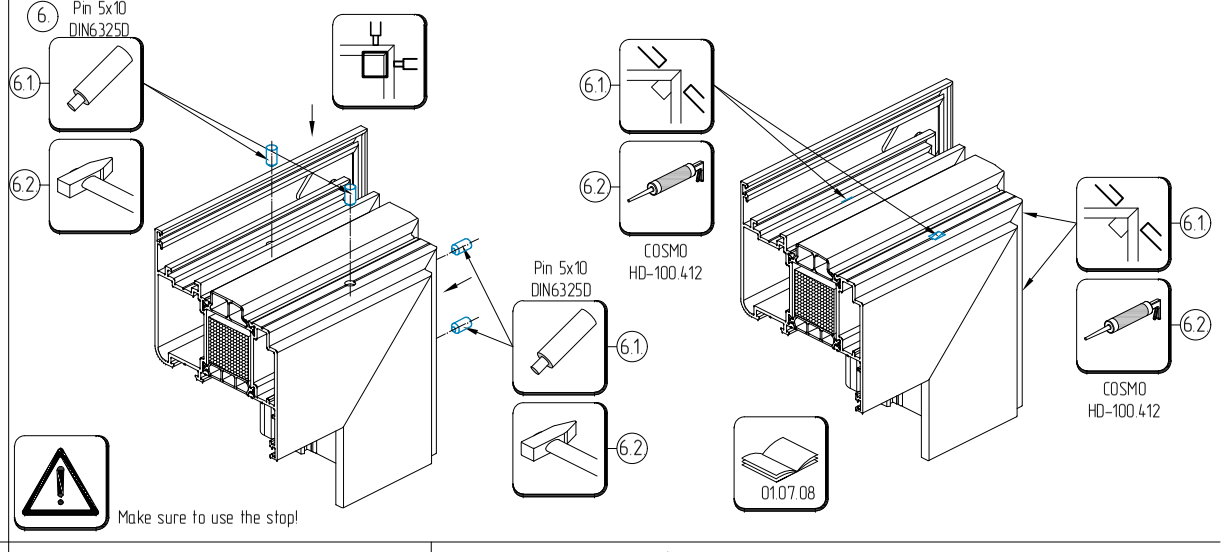

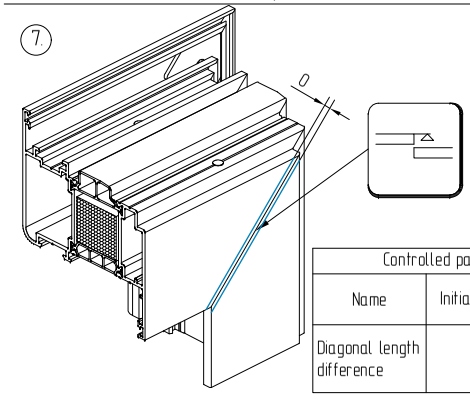

Controlled parameters of assembled item		
Name	Initial size intervals, mm	Limit deviation, mm
Diagonal length difference	≤1000 1000–2000 >2000	1.0 2.0 3.0

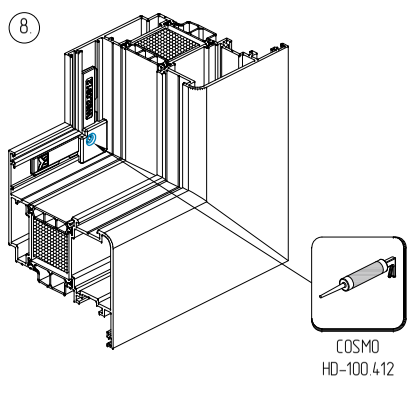

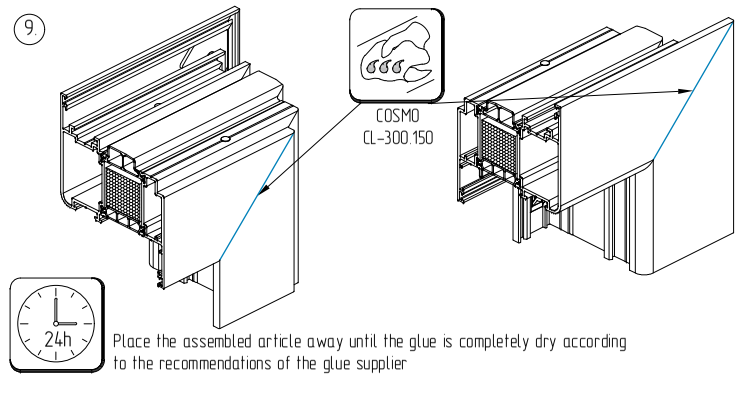

Accessories selection and profile machining at an angle of 90°

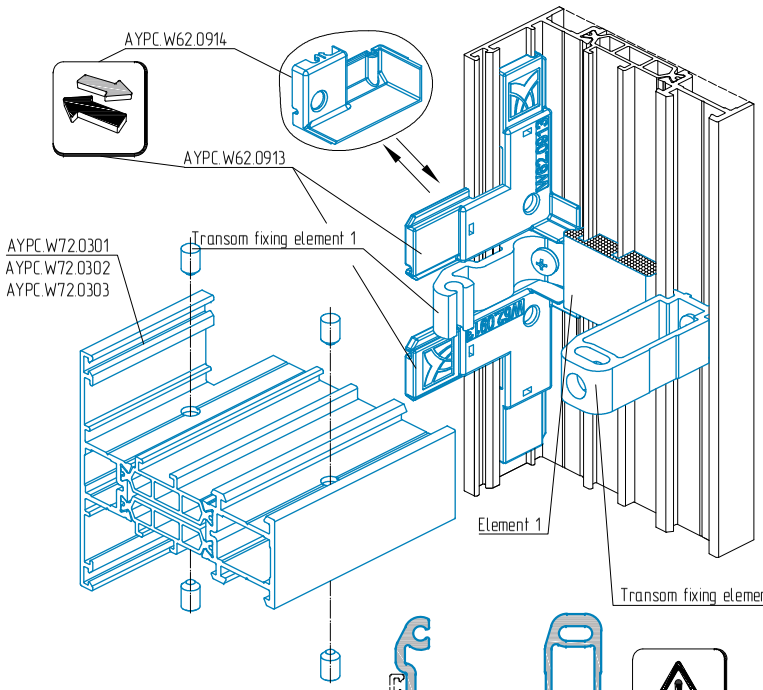

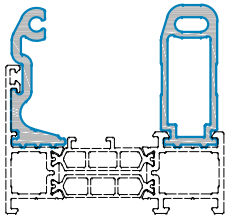

Correct positioning of transom fixing elements

AYPC.W62.0913 install before assembling.
AYPC.W62.0914 install after assembling

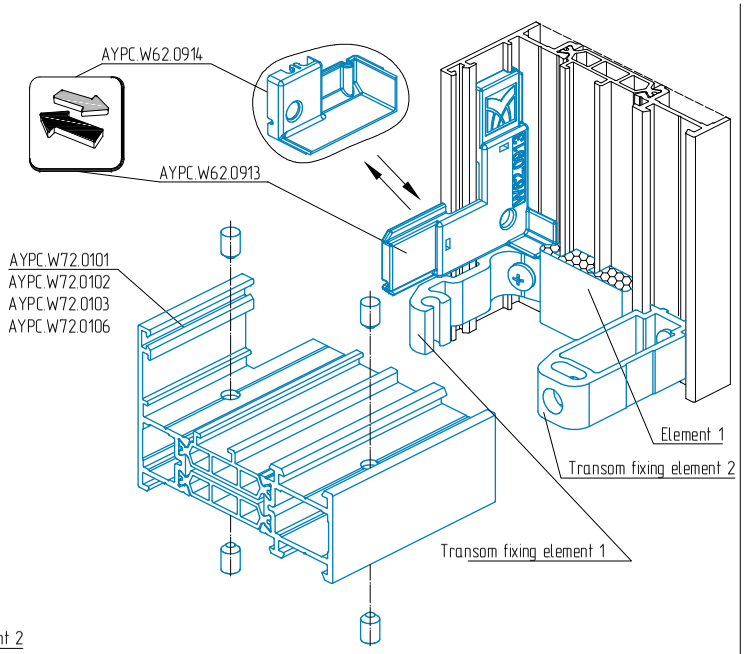

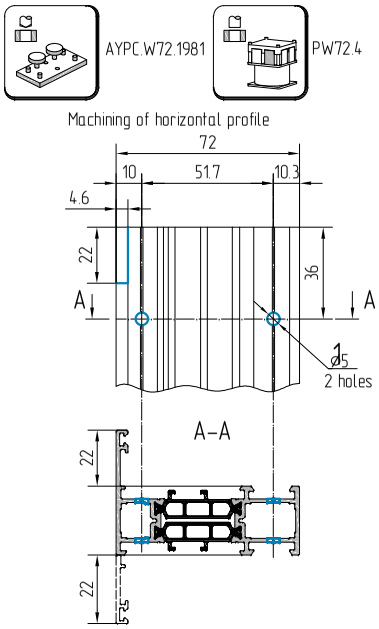

Article	Transom fixing element				Element 1		
	Transom fixing element 1		Transom fixing element 2				
	Article	Qty, pcs	Article	Qty, pcs	Article	Qty, pcs	Drawing
AYPC.W72.0101, AYPC.W72.0301	AYPC.W62.0951	1	AYPC.W62.0973	1	AYPC.W62.0916	1	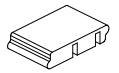
AYPC.W72.0102, AYPC.W72.0302	AYPC.W62.0951-01	1	AYPC.W62.0973-01	1	AYPC.W62.0916-01	1	
AYPC.W72.0103, AYPC.W72.0303	AYPC.W62.0951-02	1	AYPC.W62.0973-02	1	AYPC.W62.0916-02	1	
AYPC.W72.0106	AYPC.W62.0951-03	2	AYPC.W62.0973-03	2	AYPC.W62.0916-03	1	

Transom fixing elements

Initial profile – AYPC.W62.0701

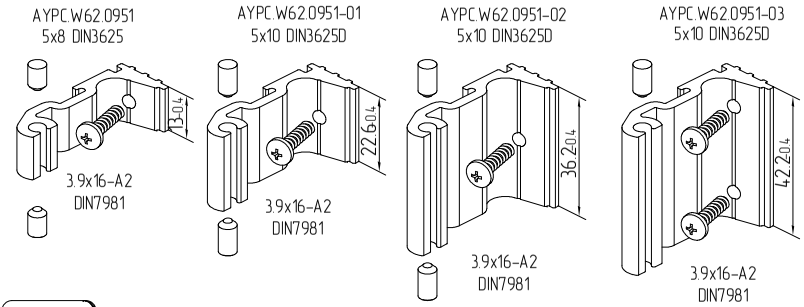

Initial profile – AYPC.W62.0705

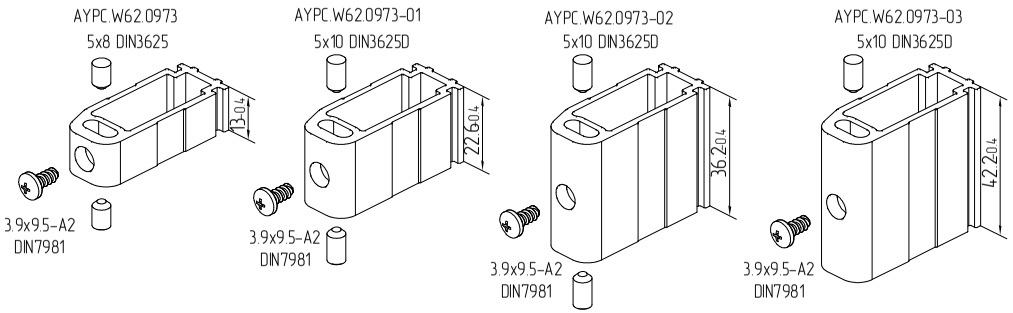

Ensure that the number of holes and installed pins corresponds to that specified in the instruction!
Reduction of the number of pins and holes will result in loss of strength characteristics of the window.
Prevent replacement of pins with self-tapping screws!

Accessories selection and profile machining for transom bars installation at an angle of 90°

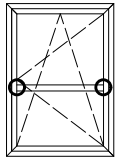

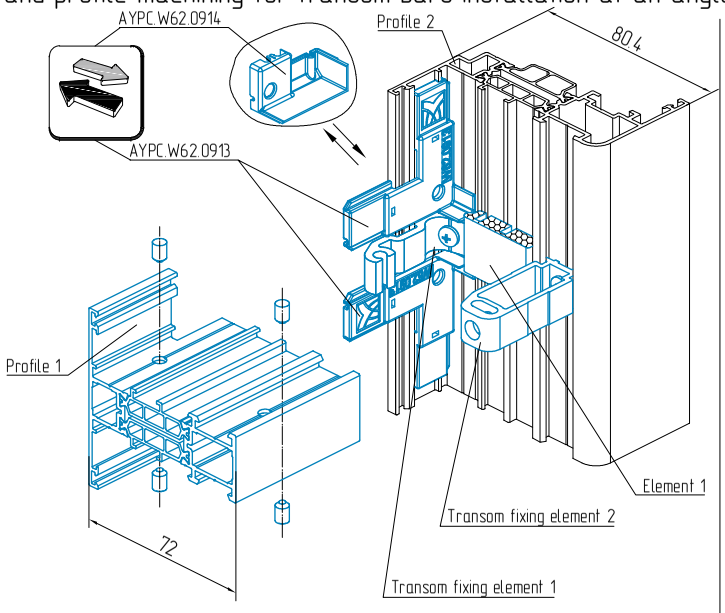

01.07.23

AYPC.W62.0913 install before assembling.
AYPC.W62.0914 install after assembling

Profile 1	Profile 2	Transom fixing element 1		Transom fixing element 2		Element 1		
		Article	Qty, pcs	Article	Qty, pcs	Article	Qty, pcs	Drawing
AYPC.W72.0301	AYPC.W72.0201, AYPC.W72.0202, AYPC.W72.0203, AYPC.W72.0212	AYPC.W62.0951	1	AYPC.W62.0973	1	AYPC.W62.0916	1	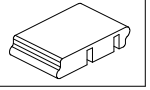
AYPC.W72.0302		AYPC.W62.0951-01	1	AYPC.W62.0973-01	1	AYPC.W62.0916-01	1	
AYPC.W72.0303		AYPC.W62.0951-02	1	AYPC.W62.0973-02	1	AYPC.W62.0916-02	1	

Profile machining 1

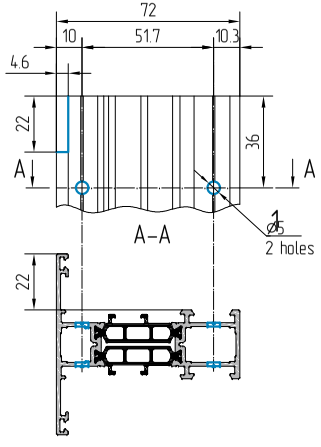

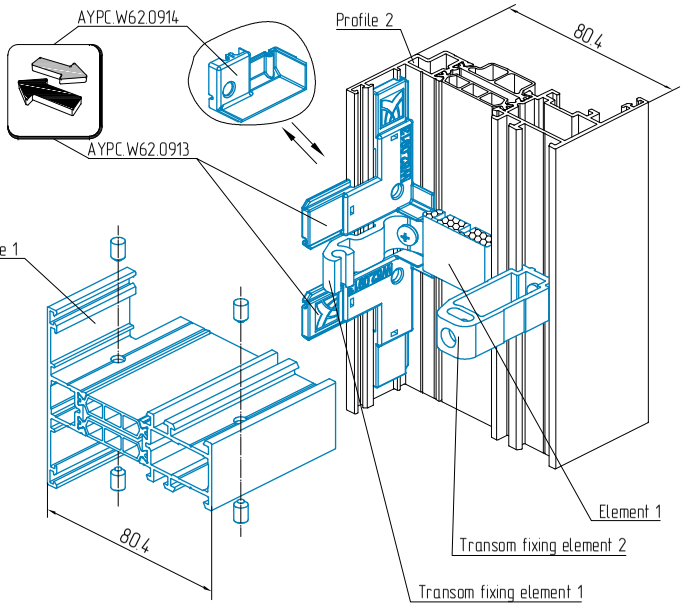

01.07.23

AYPC.W62.0913 install before assembling.
AYPC.W62.0914 install after assembling

Profile 1	Profile 2	Transom fixing element 1		Transom fixing element 2		Element 1		
		Article	Qty, pcs	Article	Qty, pcs	Article	Qty, pcs	Drawing
AYPC.W72.0321	AYPC.W72.0221, AYPC.W72.0222, AYPC.W72.0223	AYPC.W62.0951	1	AYPC.W62.0973	1	AYPC.W62.0916	1	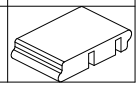

Profile machining1

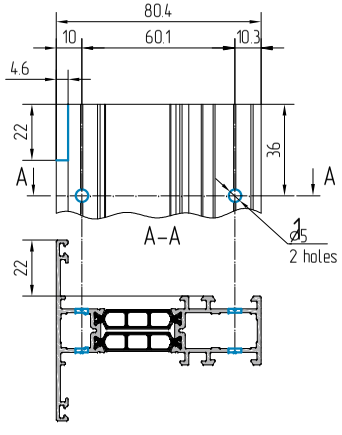

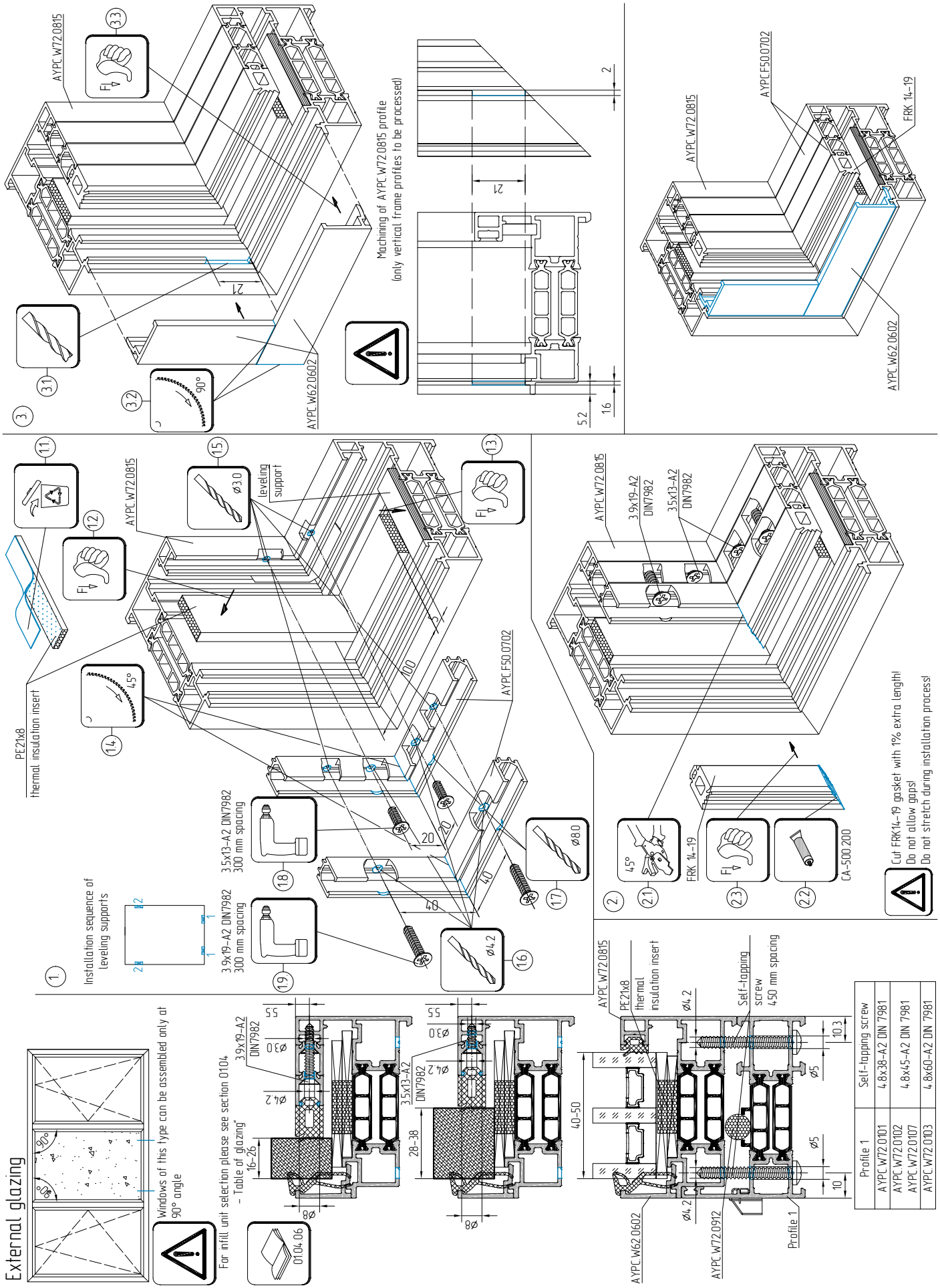
AYPC W72 0815
AYPC W62 0602
Machining of AYPC W72 0815 profile
(only vertical frame profiles to be processed)
AYPC F50 0702
FRK 14–19
PE21x8
thermal insulation insert
Installation sequence of
leveling supports
3.5x13–A2 DIN7982
300 mm spacing
3.9x19–A2 DIN7982
300 mm spacing
leveling support
3.9x19–A2 DIN7982
3.5x13–A2 DIN7982
CA–500 200
Cut FRK14–19 gasket with 1% extra length!
Do not allow gaps!
Do not stretch during installation process!
External glazing
Windows of this type can be assembled only at 90° angle
For infill unit selection please see section 0104
– Table of glazing"
0104.06
Self–tapping screw
450 mm spacing
AYPC W72 0912
Profile 1
Profile 1 | Self–tapping screw
AYPC W72 0101 | 4.8x38–A2 DIN 7981
AYPC W72 0102 AYPC W72 0107 | 4.8x45–A2 DIN 7981
AYPC W72 0103 | 4.8x60–A2 DIN 7981

External glazing

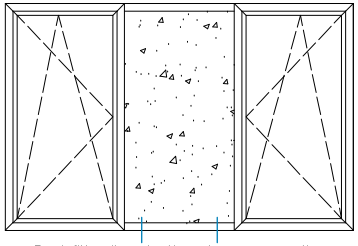

For infill units selection, please see section "01.04 – Table of glazing"

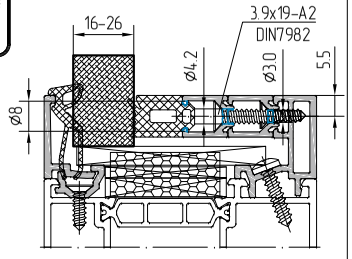

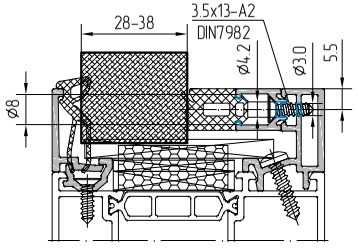

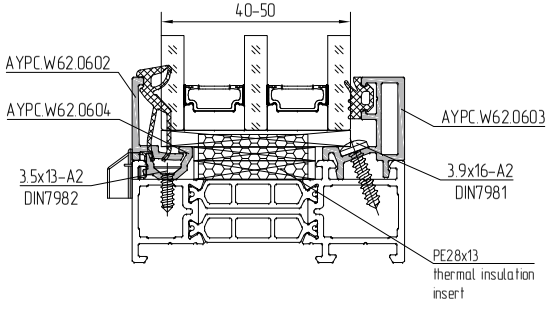

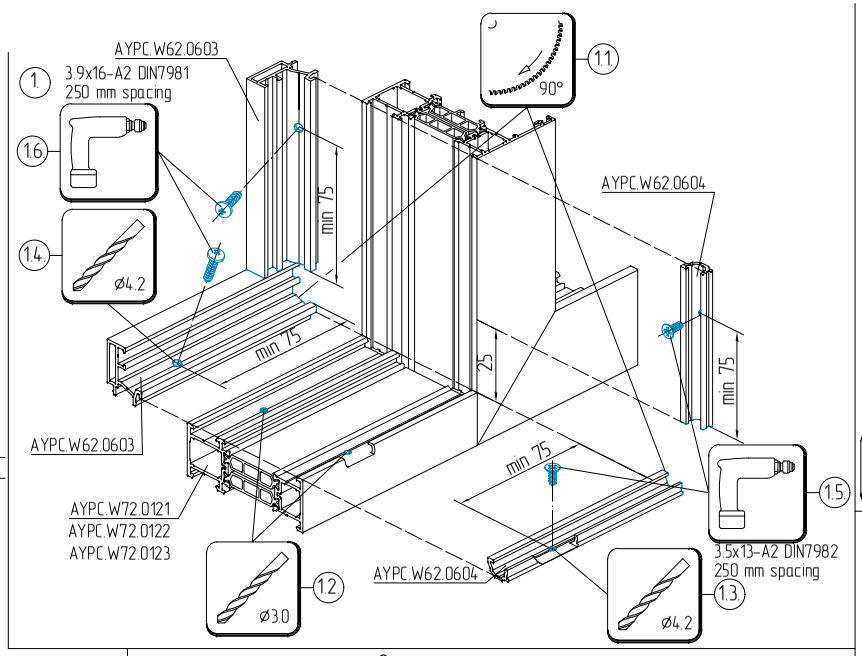

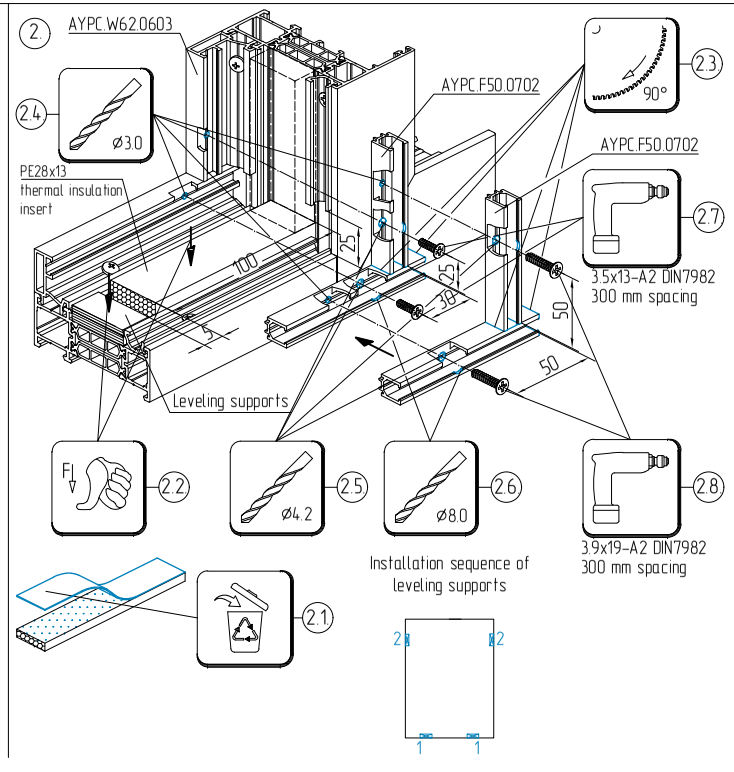

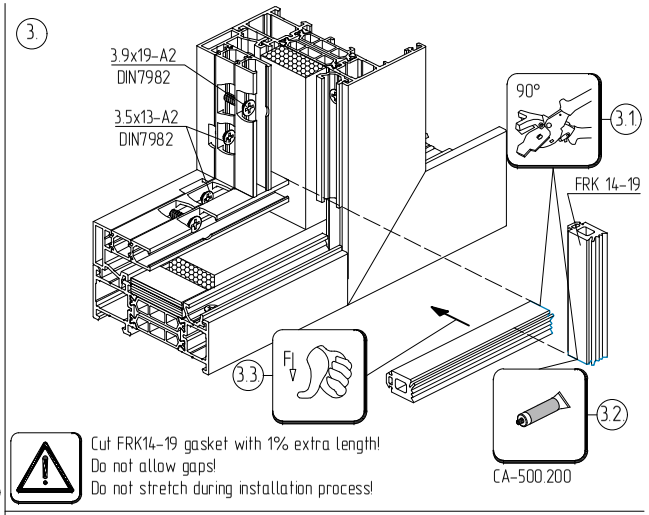

Cut FRK14–19 gasket with 1% extra length!
Do not allow gaps!
Do not stretch during installation process!

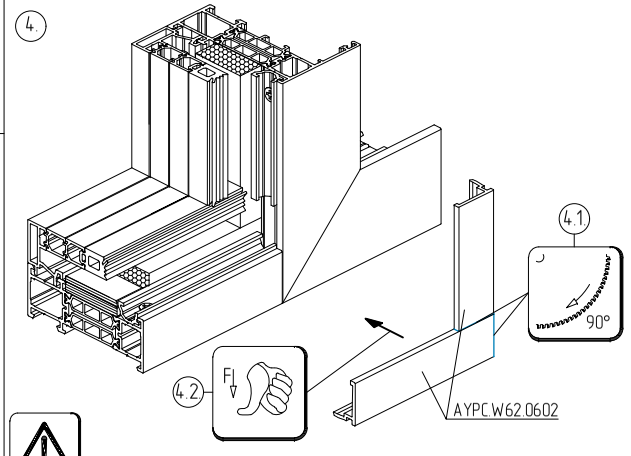

Install infill unit before AYPC.W62.0602 glass bead installation

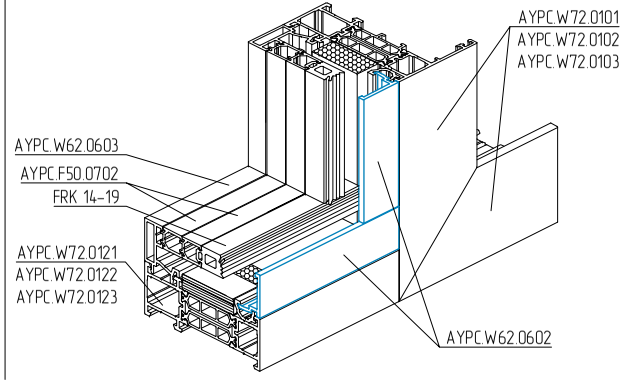

Fastening of the widener profile in case of external glazing

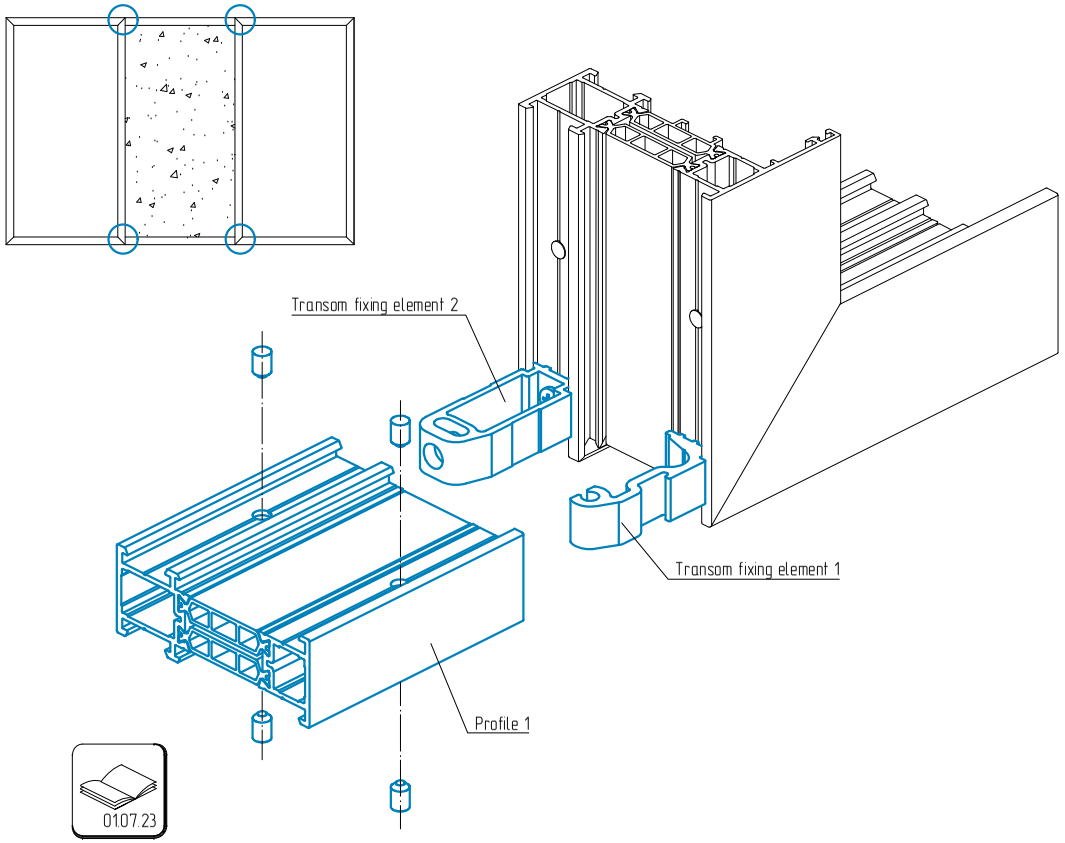

Install transom fixing element 2 before assembling the corner connection

Profile 1	Transom fixing element				Element 1		
	Transom fixing element 1		Transom fixing element 2				
	Article	Qty, pcs	Article	Qty, pcs	Article	Qty, pcs	Drawing
AYPC.W72.0121	AYPC.W62.0951	1	AYPC.W62.0973	1	AYPC.W62.0916	1	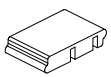
AYPC.W72.0122	AYPC.W62.0951-01	1	AYPC.W62.0973-01	1	AYPC.W62.0916-01	1	
AYPC.W72.0123	AYPC.W62.0951-02	1	AYPC.W62.0973-02	1	AYPC.W62.0916-02	1	

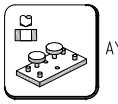
AYPC.W72.1981

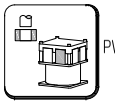
PW72.4

Profile machining scheme 1

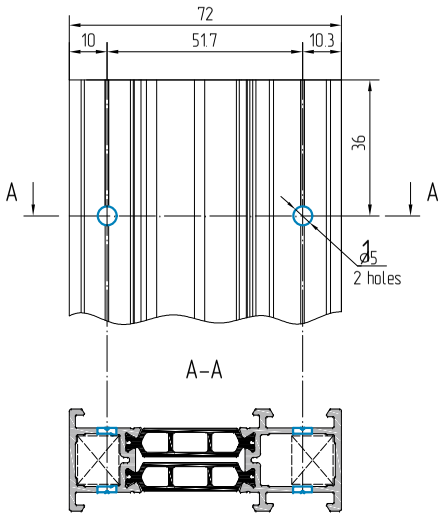

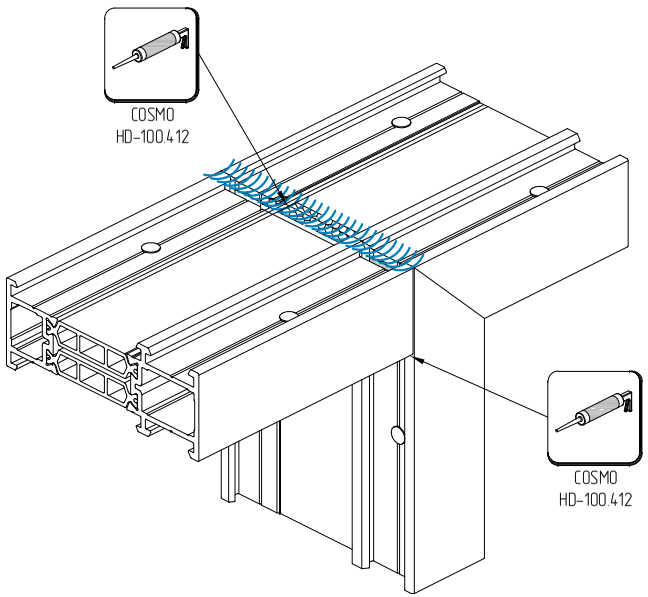

Machining of profiles with T-connection at an angle of 45°...90°

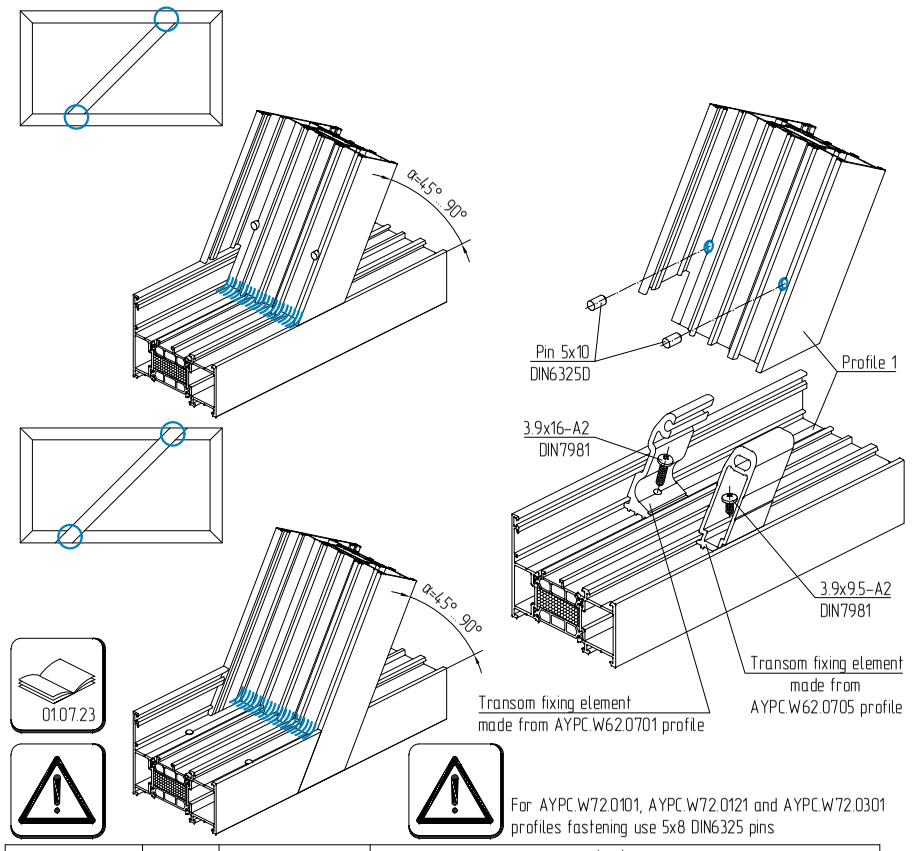

For AYPC.W72.0101, AYPC.W72.0121 and AYPC.W72.0301 profiles fastening use 5x8 DIN6325 pins

Profile 1	H, mm	Auxiliary dimensions, mm	Angle α									
			45°	50°	55°	60°	65°	70°	75°	80°	85°	90°
AYPC.W72.0101 AYPC.W72.0121 AYPC.W72.0301	13	$B=\frac{H}{\sin\alpha}$	18.4	17.0	15.9	15.0	14.3	13.8	13.5	13.2	13.0	13.0
		$S=22\sin\alpha$	15.6	16.9	18.0	19.1	19.9	20.7	21.3	21.7	21.9	22.0
		$X1=\frac{36}{\sin\alpha}+\frac{1.5}{\tg\alpha}$	52.4	48.3	45.0	42.4	40.4	38.9	37.7	36.8	36.3	36.0
		$X2=\frac{36}{\sin\alpha}$	50.9	47.0	43.9	41.6	39.7	38.3	37.3	36.6	36.1	36.0
AYPC.W72.0102 AYPC.W72.0122 AYPC.W72.0302	22.6	$B=\frac{H}{\sin\alpha}$	32.0	29.5	27.6	26.1	24.9	24.1	23.4	22.9	22.7	22.6
		$S=22\sin\alpha$	15.6	16.9	18.0	19.1	19.9	20.7	21.3	21.7	21.9	22.0
		$X1=\frac{36}{\sin\alpha}+\frac{1.5}{\tg\alpha}$	52.4	48.3	45.0	42.4	40.4	38.9	37.7	36.8	36.3	36.0
		$X2=\frac{36}{\sin\alpha}$	50.9	47.0	43.9	41.6	39.7	38.3	37.3	36.6	36.1	36.0
AYPC.W72.0103 AYPC.W72.0123 AYPC.W72.0303	36.2	$B=\frac{H}{\sin\alpha}$	51.2	47.3	44.2	41.8	39.9	38.5	37.5	36.8	36.3	36.2
		$S=22\sin\alpha$	15.6	16.9	18.0	19.1	19.9	20.7	21.3	21.7	21.9	22.0
		$X1=\frac{36}{\sin\alpha}+\frac{1.5}{\tg\alpha}$	52.4	48.3	45.0	42.4	40.4	38.9	37.7	36.8	36.3	36.0
		$X2=\frac{36}{\sin\alpha}$	50.9	47.0	43.9	41.6	39.7	38.3	37.3	36.6	36.1	36.0

Profile 1 machining

1. Cutting of profile 1 at an angle of 45°...90°

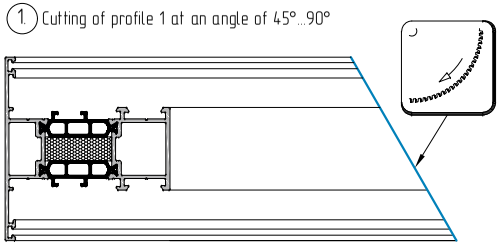

2. Milling of profile 1

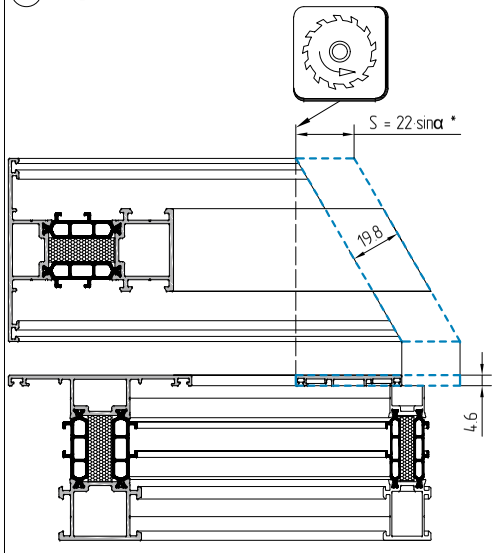

3.

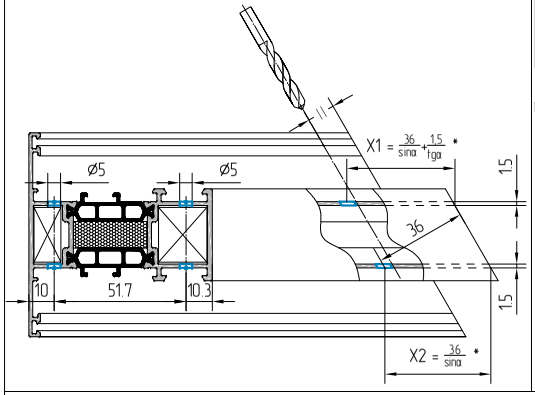

Transom fixing elements cutting

AYPC.W62.0701

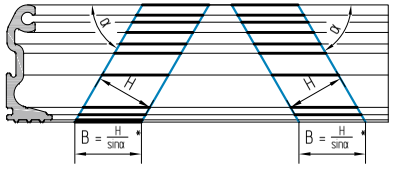

Machining of transom fixing element for 3.9x16-A2 DIN7981 self-tapping screw installation

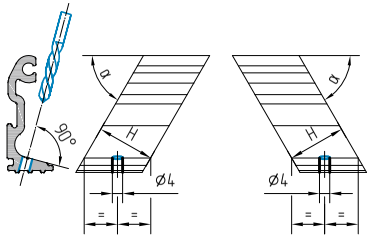

AYPC.W62.0705

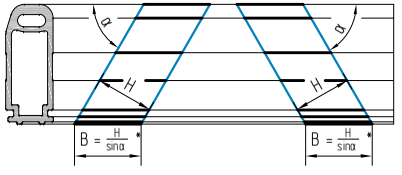

Machining of transom fixing element for 3.9x9.5-A2 DIN7981 self-tapping screw installation

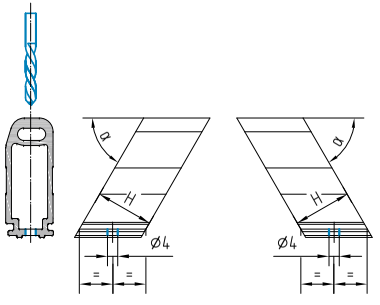

* Standard angles are shown in the table

Assembly sequence of T-connection at an angle of 90°

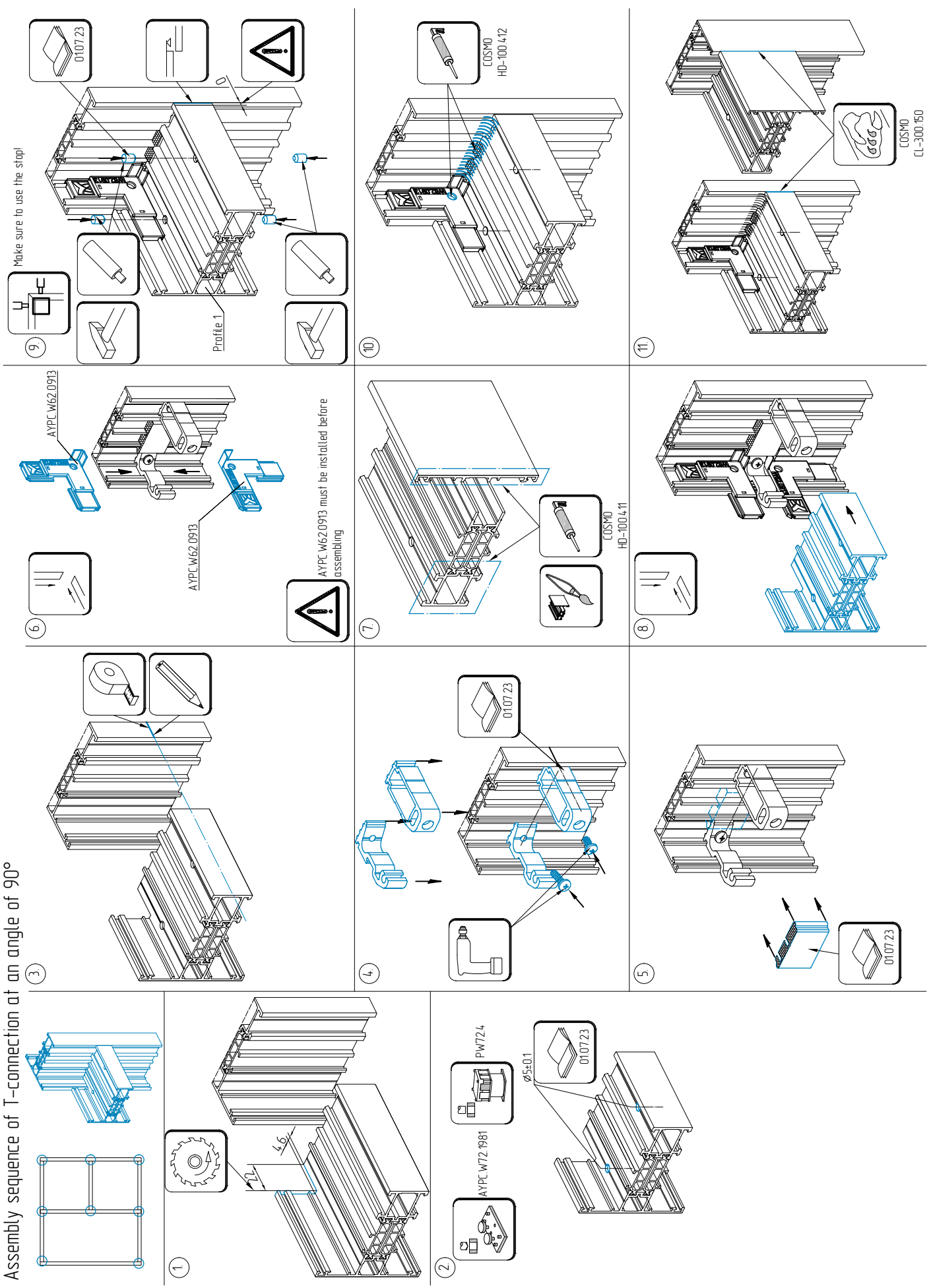

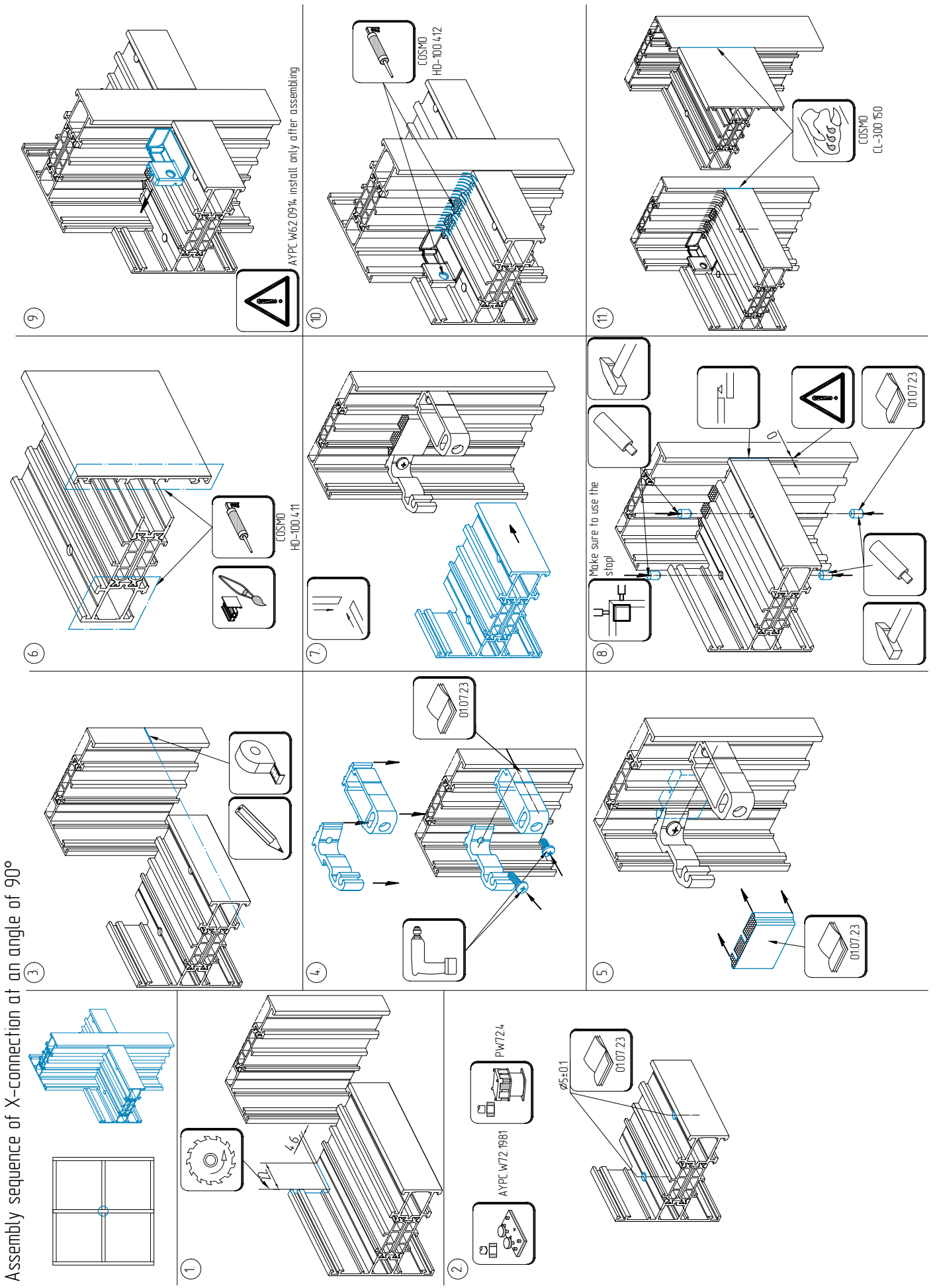
Assembly sequence of X-connection at an angle of 90°
1
46
2
PW72.4
AYPC.W72.1981
Ø5±0.1
0107.23
3
4
0107.23
5
0107.23
6
COSMO
HD-100.411
7
8
Make sure to use the stop!
0107.23
9
AYPC.W62.0914 install only after assembling
10
COSMO
HD-100.412
11
COSMO
CL-300.150

Infill unit installation into the frame

1. FRK197/FRK29-01 gasket installation. For installation options, see pages 01.07.33–07.36

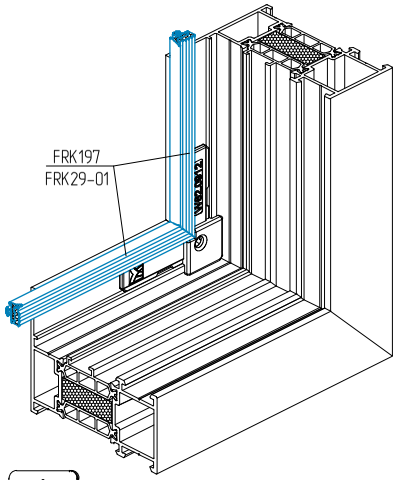

Do not stretch the gasket!

2. Bearing support installation

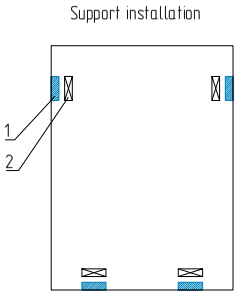

1. – bearing support;
2. – leveling support.

For size selection of leveling supports, see section 01.04

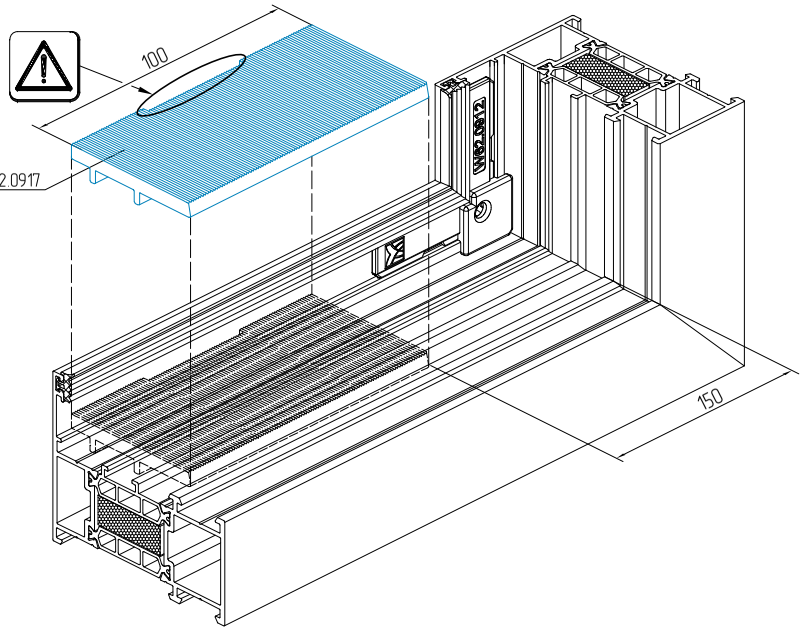

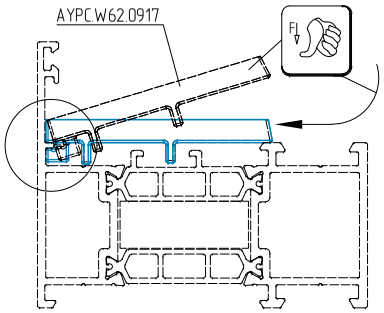

Do not allow sliding!

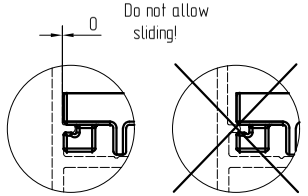

3.1 Seam sealing machining. See page 01.07.33

3.2 Seam sealing installation

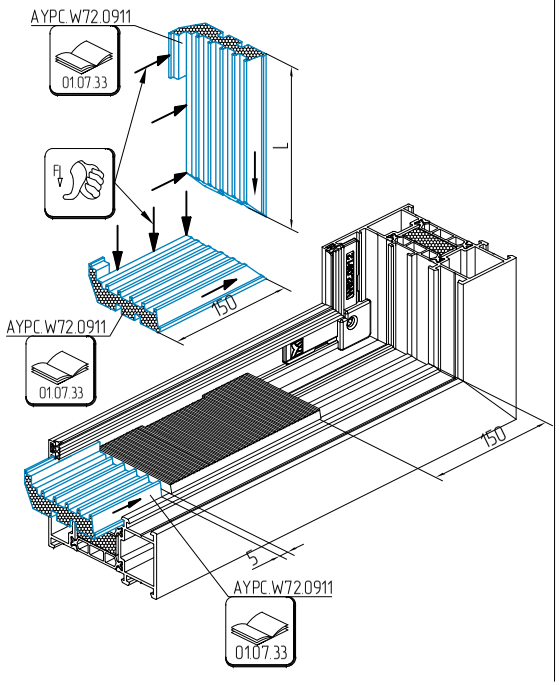

4. Infill unit installation. Leveling support installation

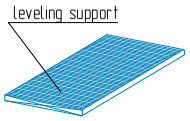

Installation sequence of leveling supports

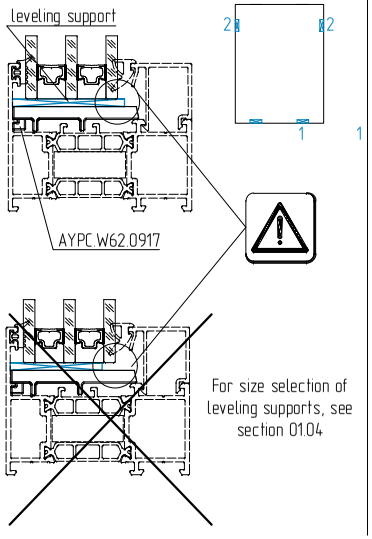

For size selection of leveling supports, see section 01.04

5. Glass bead installation. Gasket installation between the glass bead and infill unit.

For glass bead and gasket size selection, see section 01.04

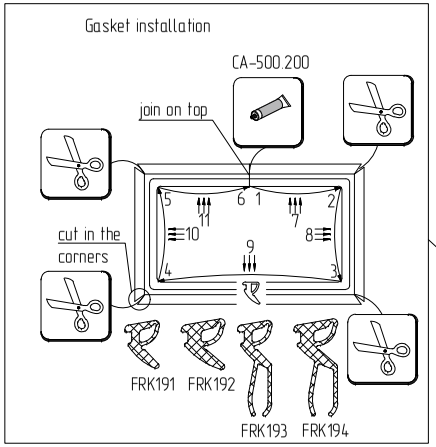

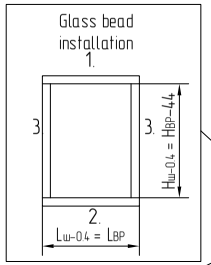

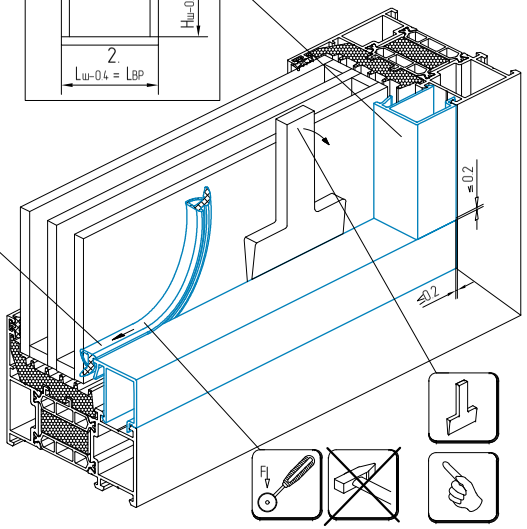

Installation of the infill unit into the sash

1. FRK197/FRK29-01 gasket installation and FRK98. For installation options, see pages 01.07.33–07.36 and 1.1 07.37

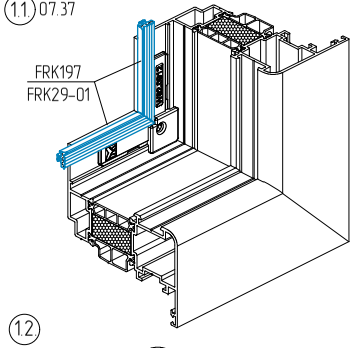

1.2

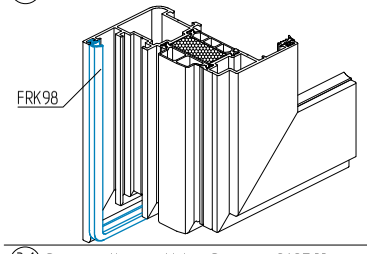

2. Bearing support installation

Support installation

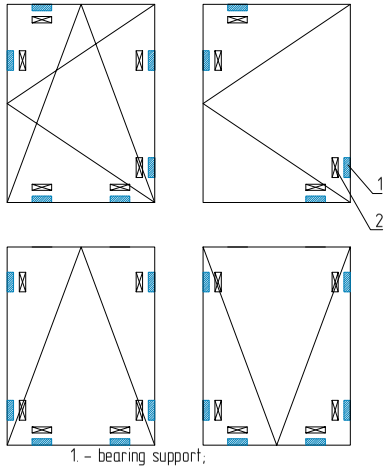

1. – bearing support;
2. – leveling support.
For size selection of leveling supports, see the section 01.04

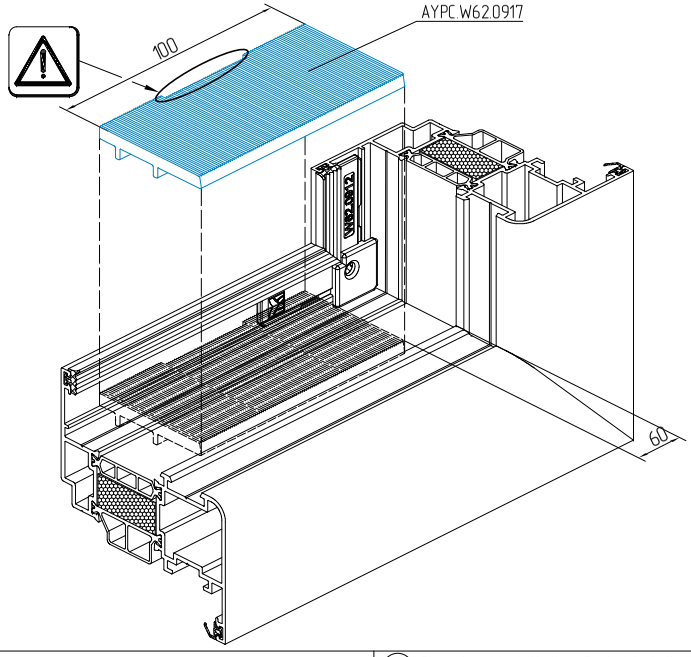

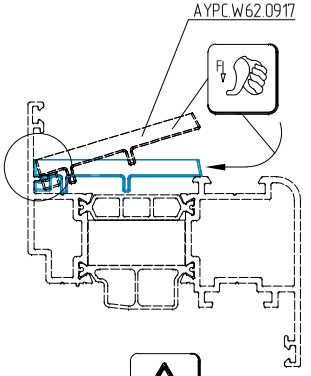

Do not allow sliding!

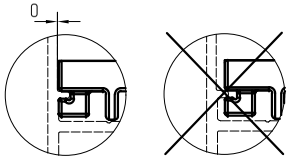

3.1 Seam sealing machining. See page 01.07.33.

3.2 Seam sealing installation

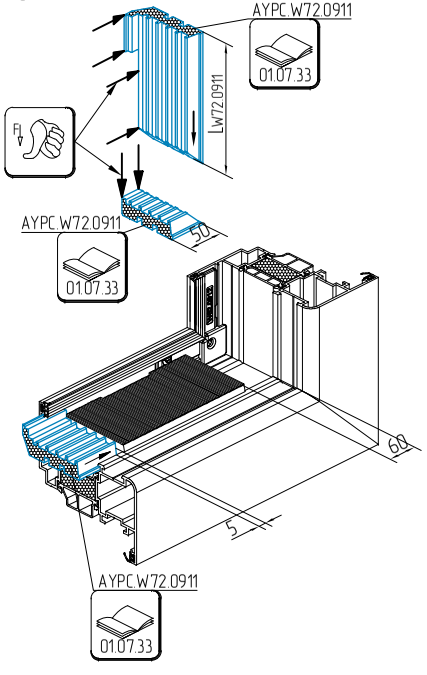

4. Seam sealing machining while overlapping of the drain holes

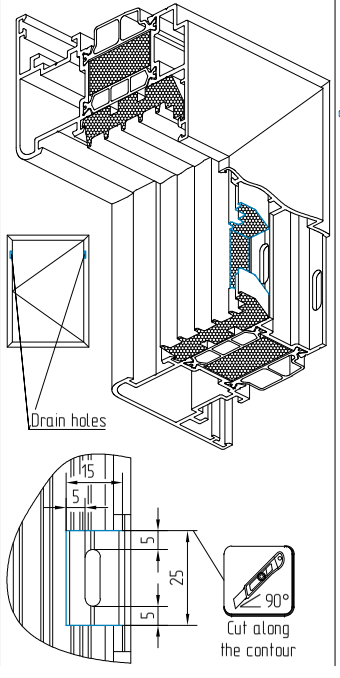

5. Infill unit installation . Leveling supports installation

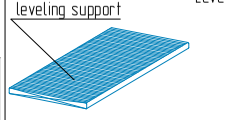

Leveling supports installation examples

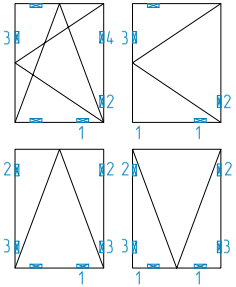

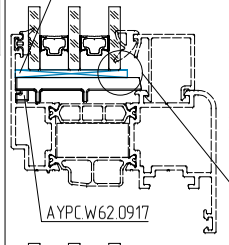

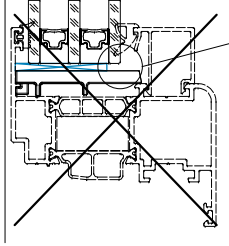

For size selection of leveling supports, see section 01.04

6. Glass bead installation. Gasket installation between the glass bead and infill unit.
For glass bead and gasket size selection, see section 01.04

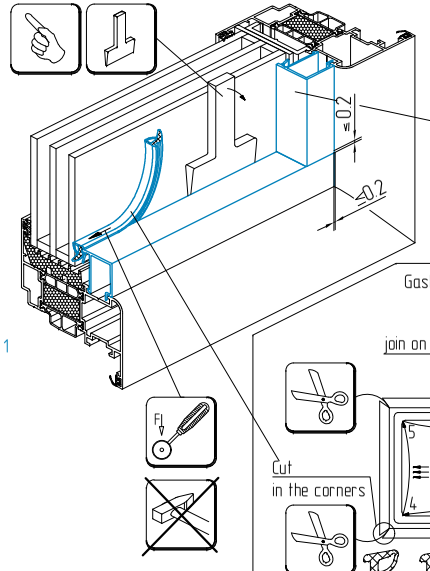

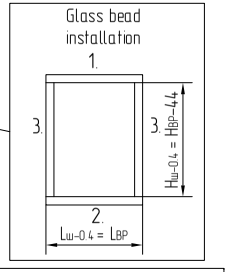

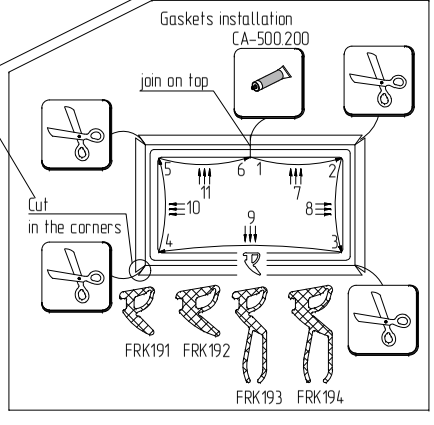

Seam sealing machining for plastic corner installation

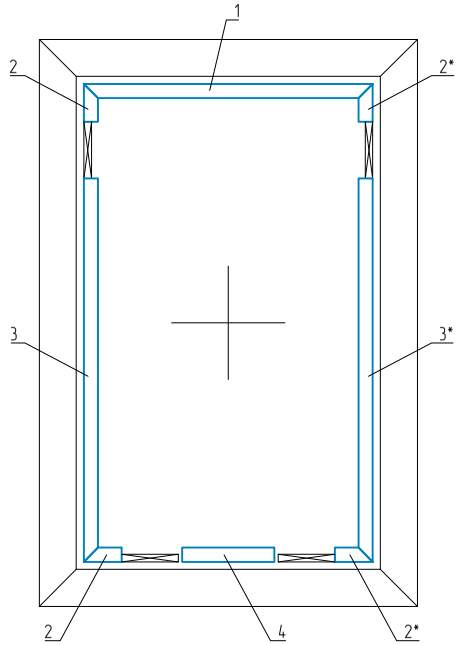

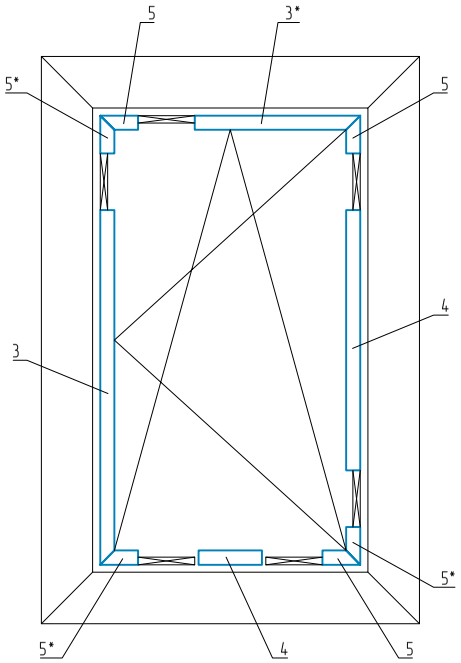

Machining of position 1

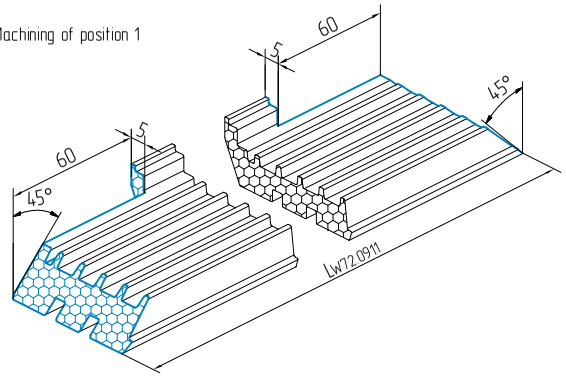

Machining of position 4

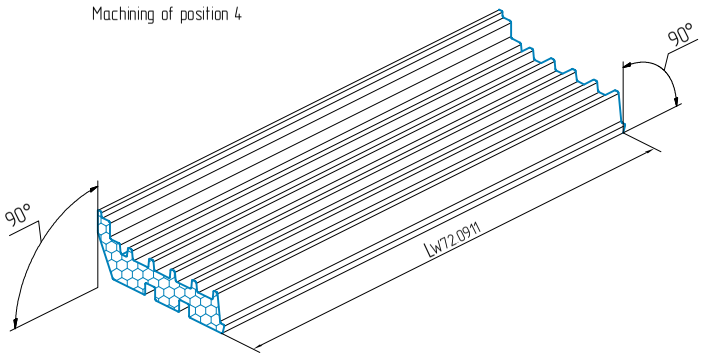

Machining of position 2
(position 2* – in a mirror manner)

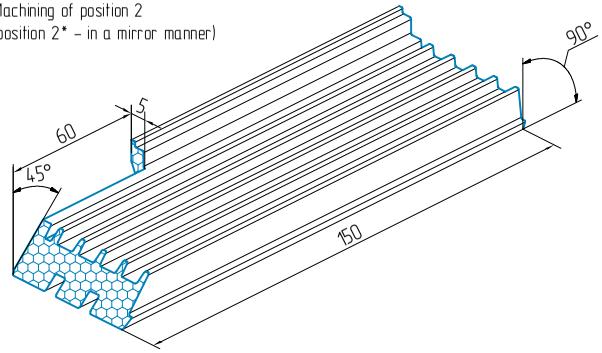

Machining of position 5 (position 5* – in a mirror manner)

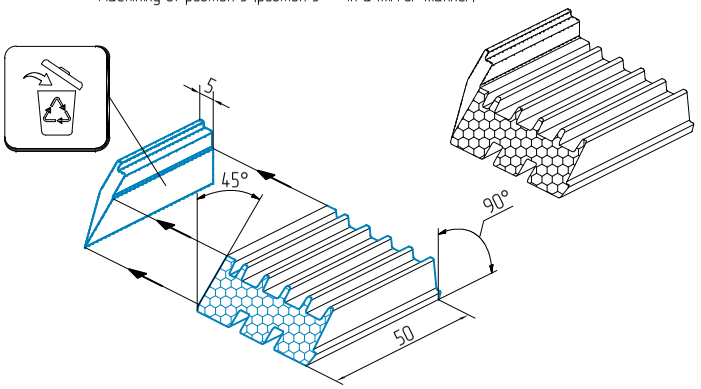

Machining of position 3
(position 3* – in a mirror manner)

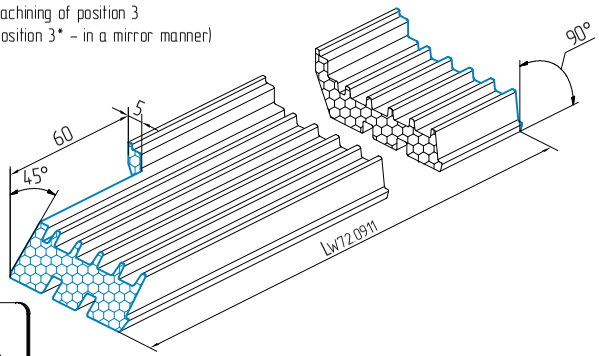

Seam sealing machining for other types of window and door sashes should be performed depending on infill unit bearing supports installation (See page 01.07.31 step 5)

Cutting and installation of FRK197 gasket

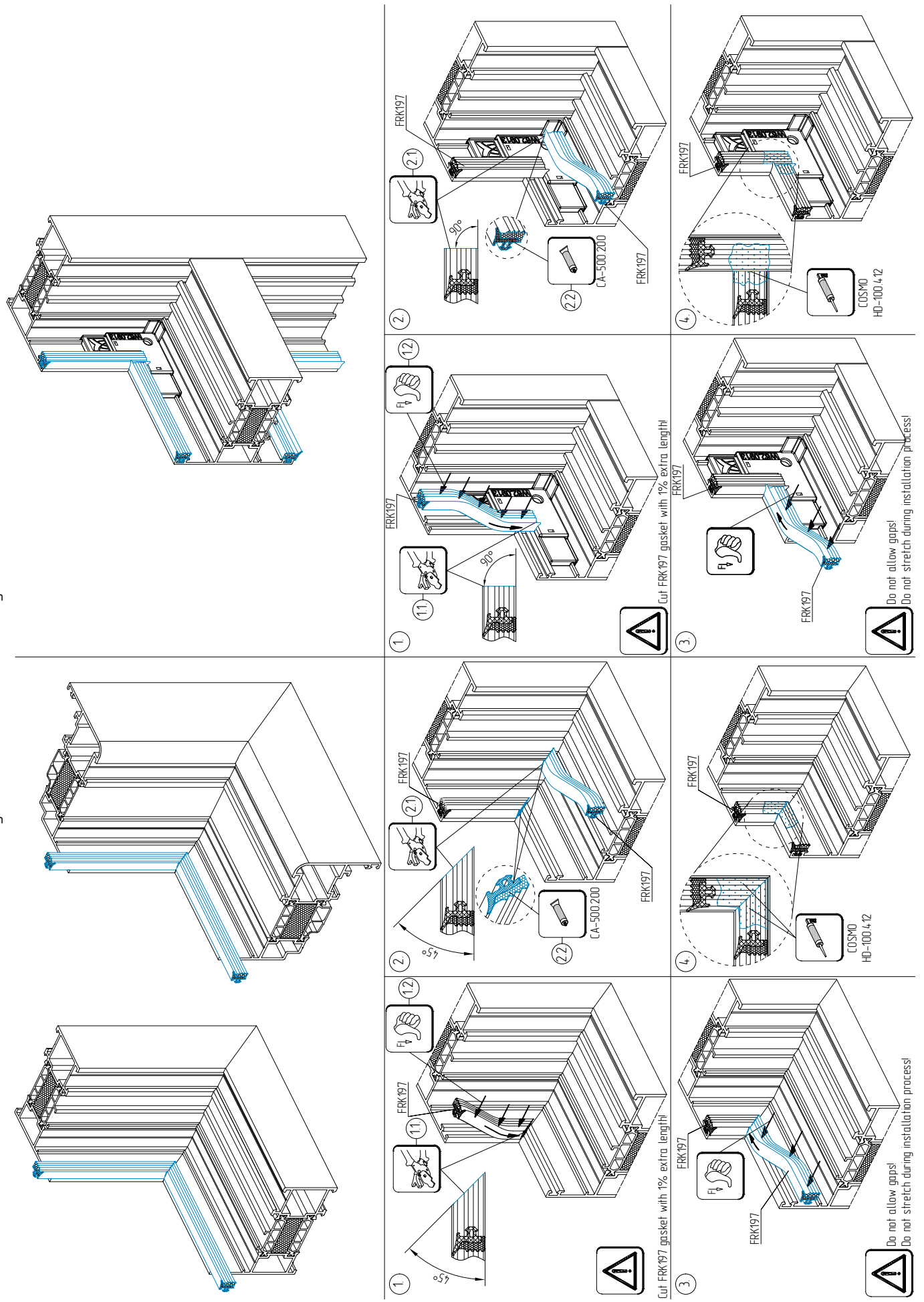

ALUTECH PROFILE SYSTEMS

Cutting and installation of FRK29-01 gasket

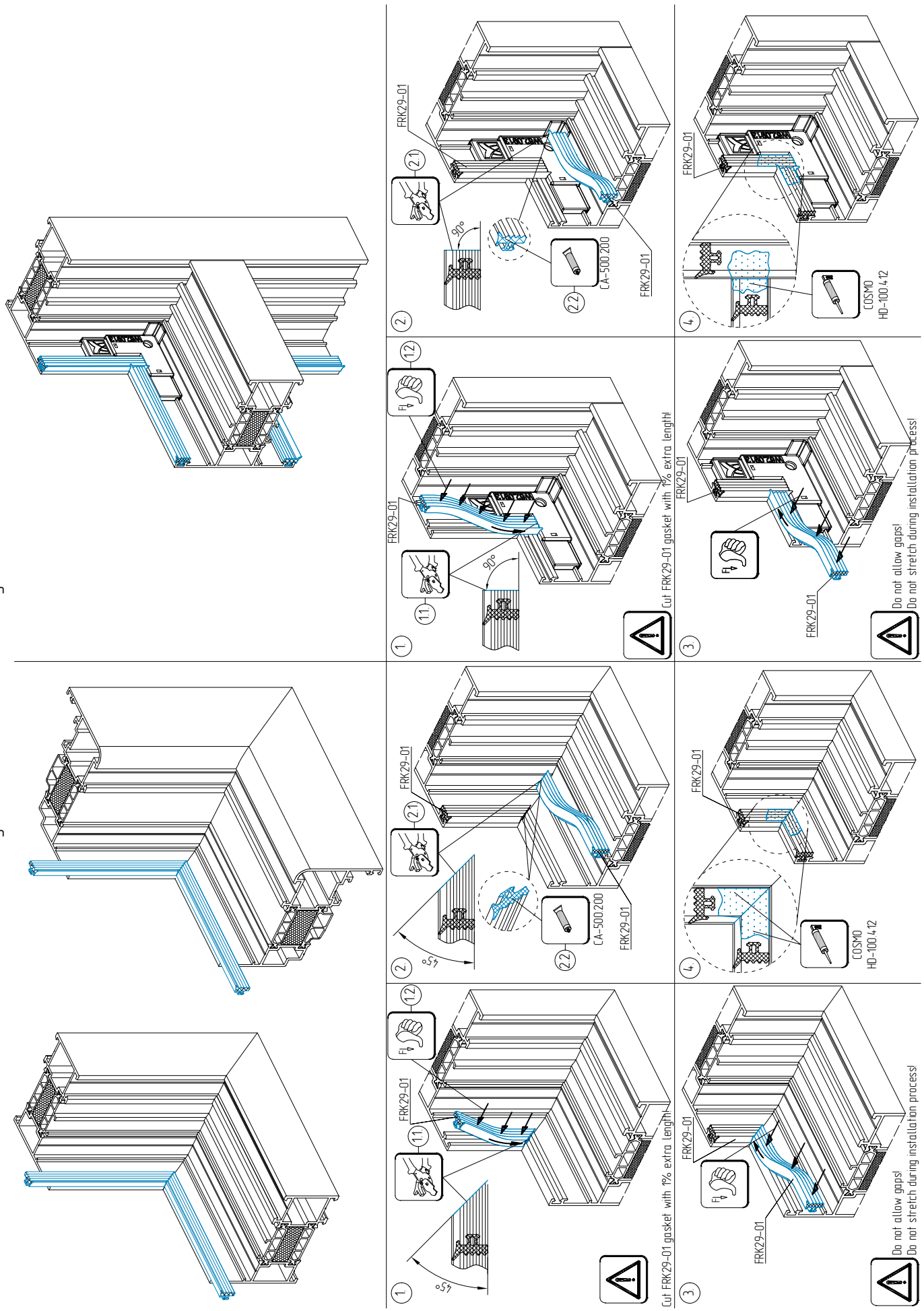

Cutting and installation of FRK197 gasket and FRK179 vulcanized corner

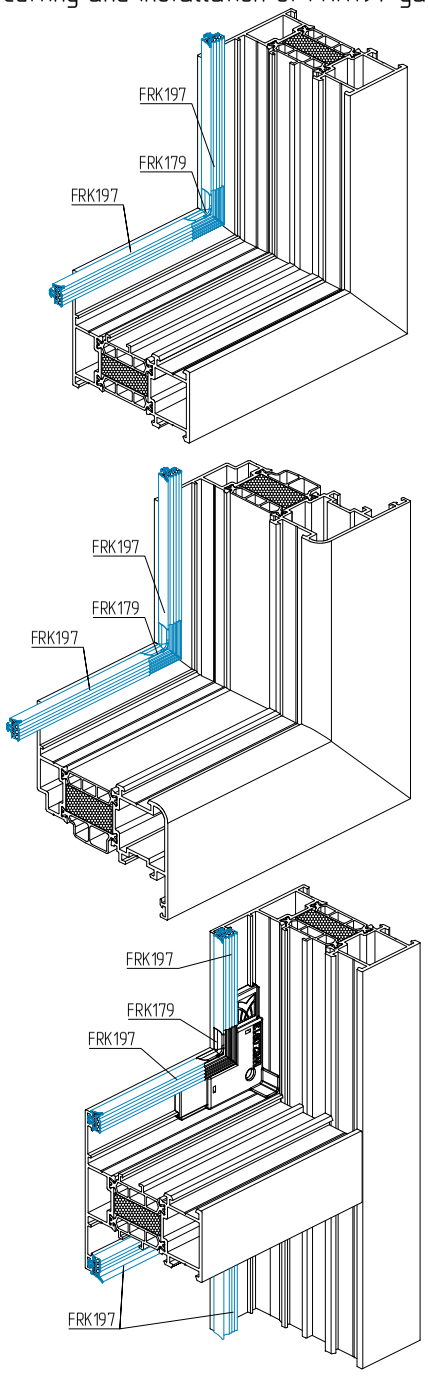

1. FRK179 installation

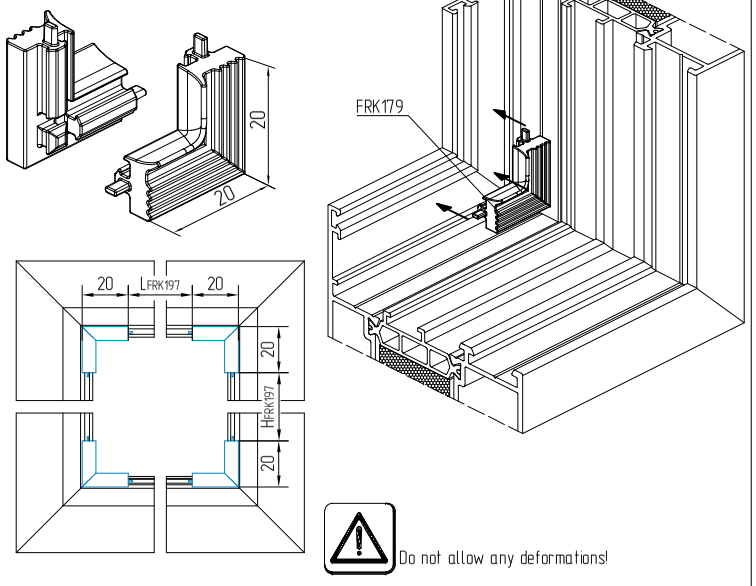

Do not allow any deformations!

2. FRK197 installation

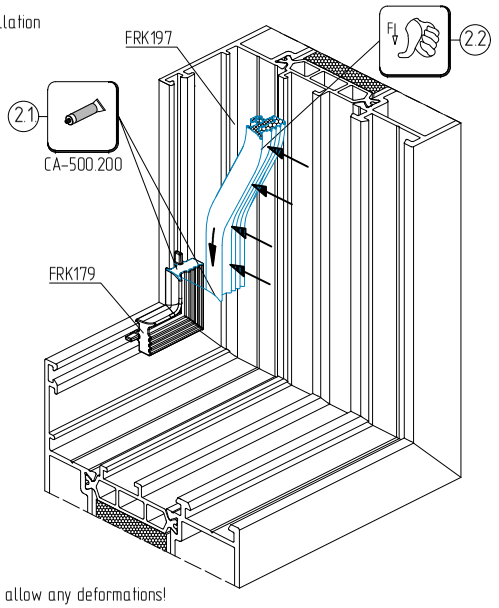

Do not allow any deformations!
Do not allow gaps!
Do not stretch during installation process!

3.

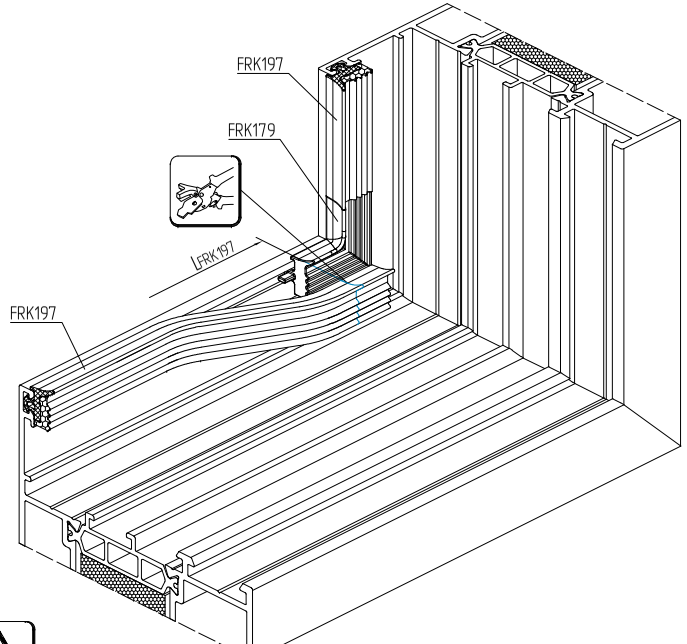

Cut FRK197 gasket with 1% extra length!

4.

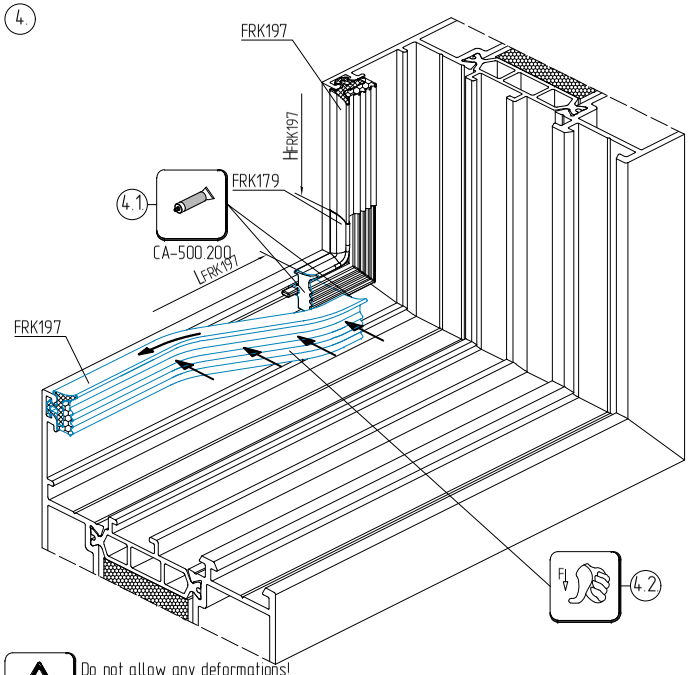

Do not allow any deformations!
Do not allow gaps!
Do not stretch during installation process!

Cutting and installation of FRK29-01 gasket and FRK170 vulcanized corner

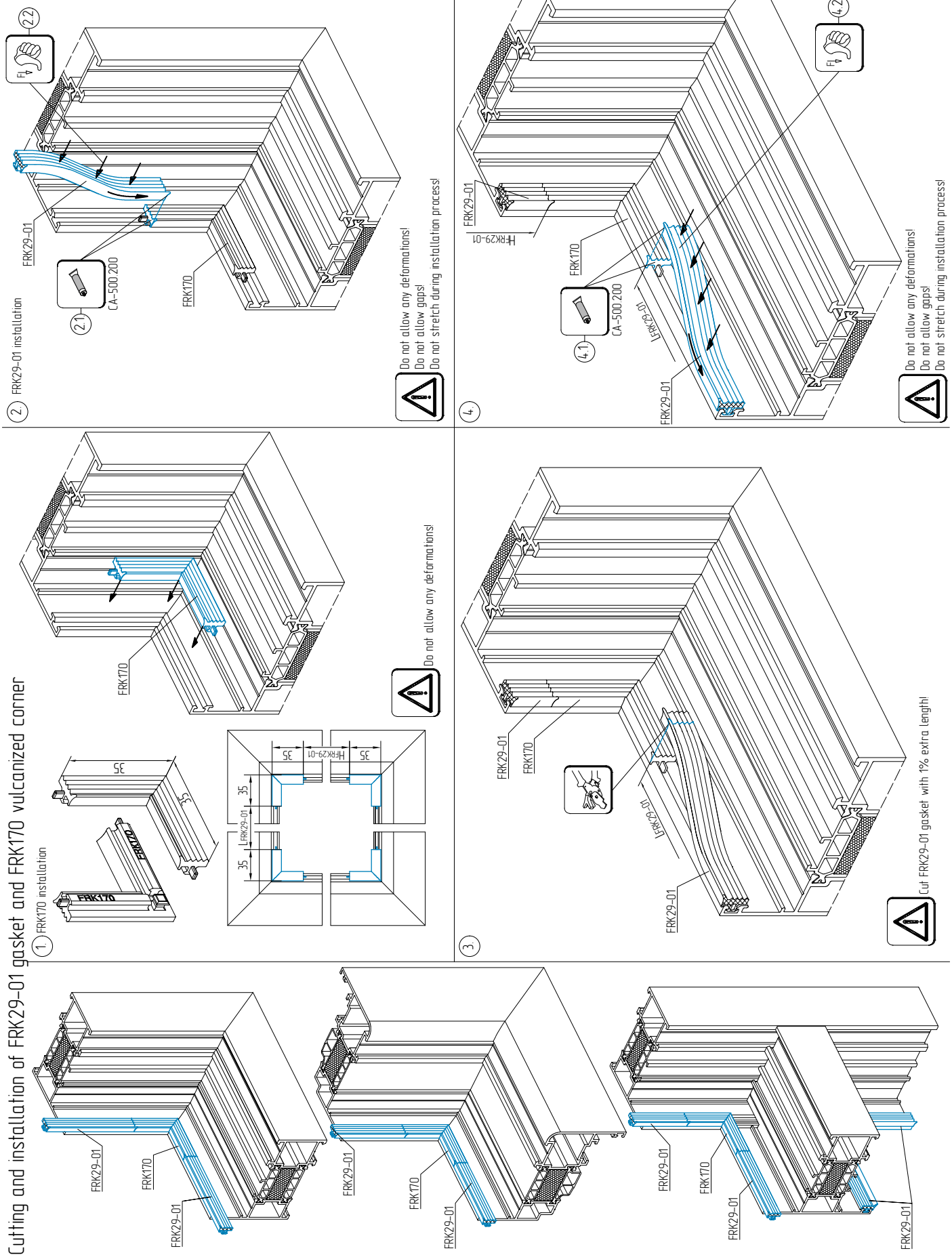

Cutting and installation of FRK98 gasket

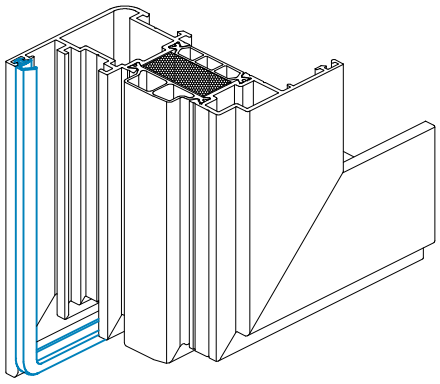

FRK98 installation sequence

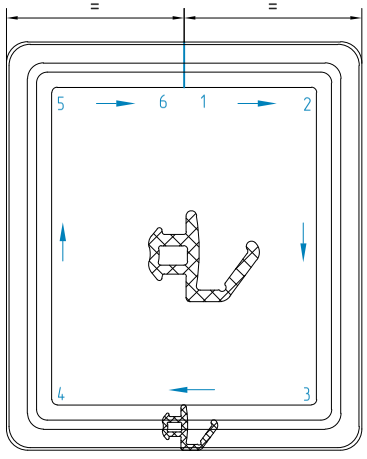

1.

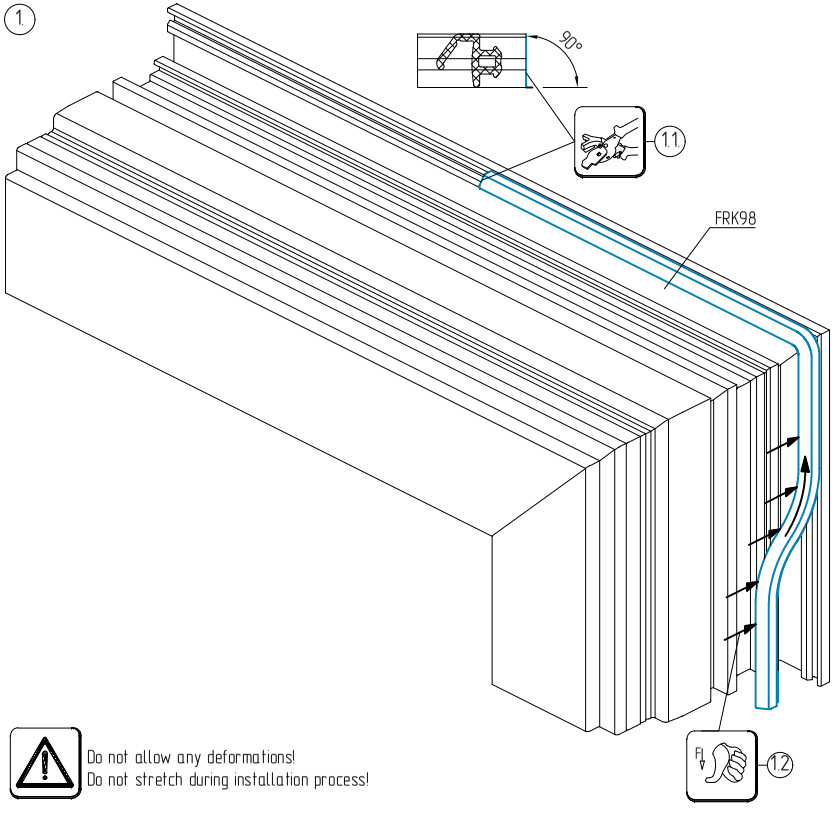

Do not allow any deformations!
Do not stretch during installation process!

2.

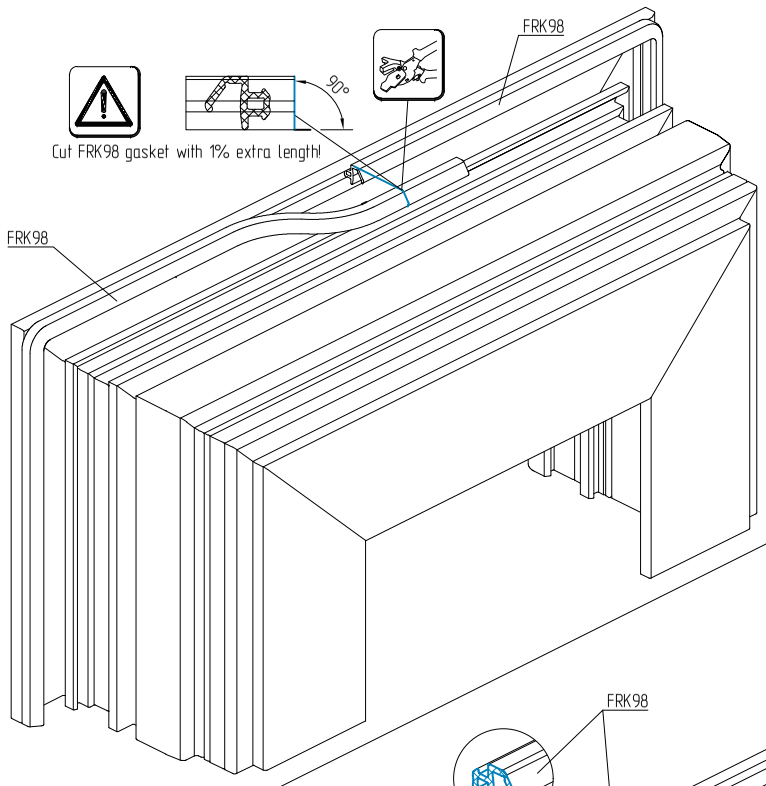

3.

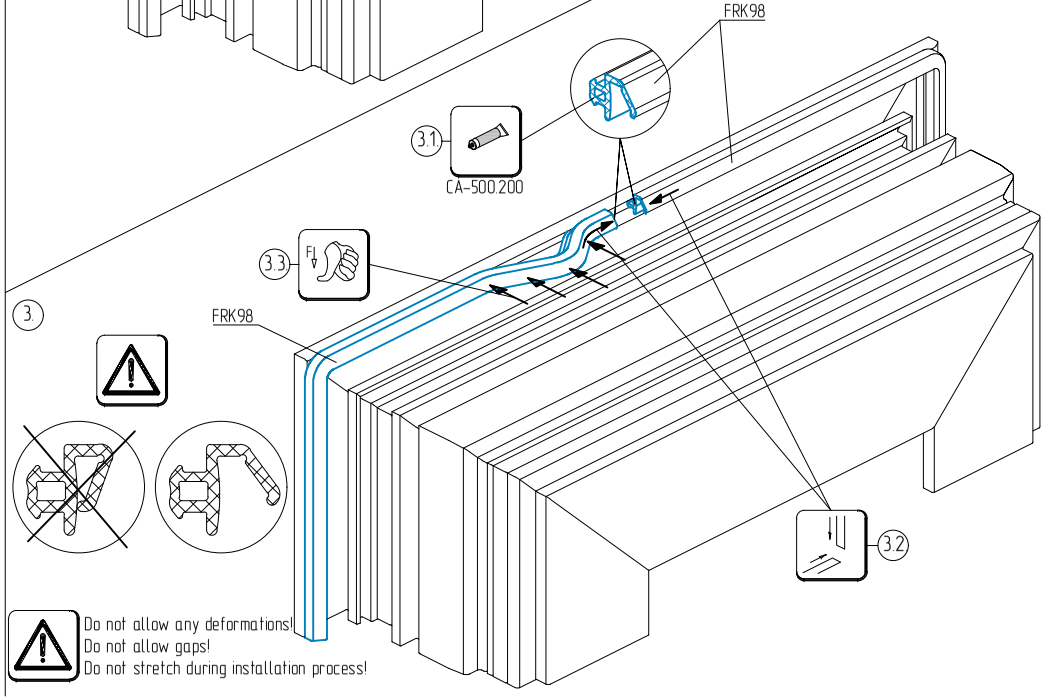

Do not allow any deformations!
Do not allow gaps!
Do not stretch during installation process!

FRK195/FRK196 gasket installation

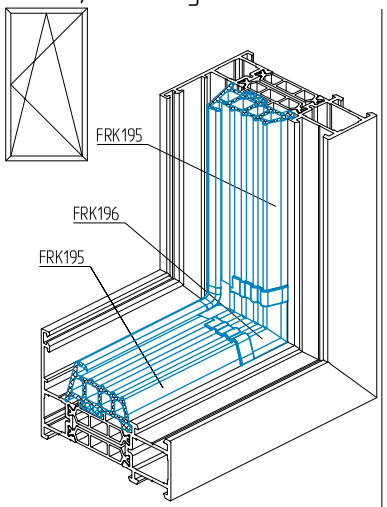

1. Frame tightening and FRK196 installation

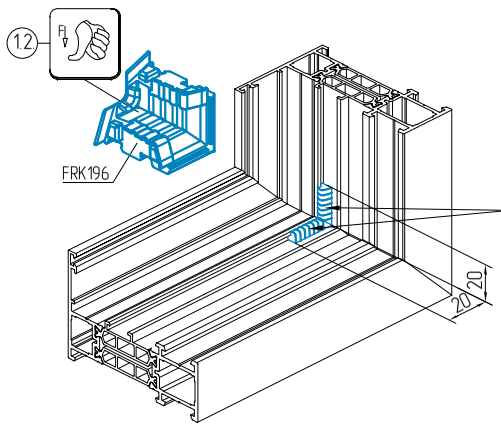

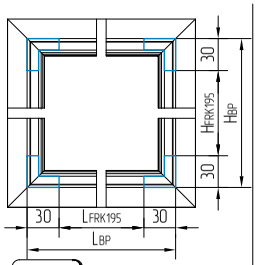

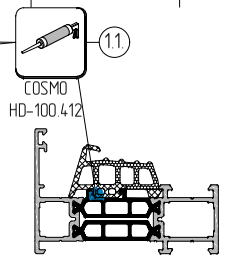

2. Check the correct installation of FRK196

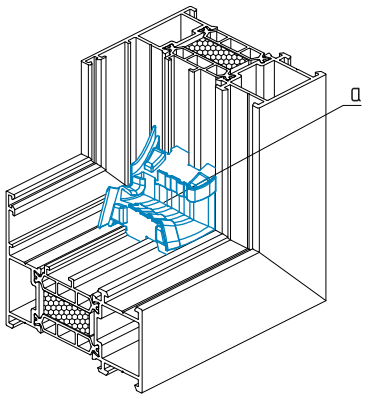

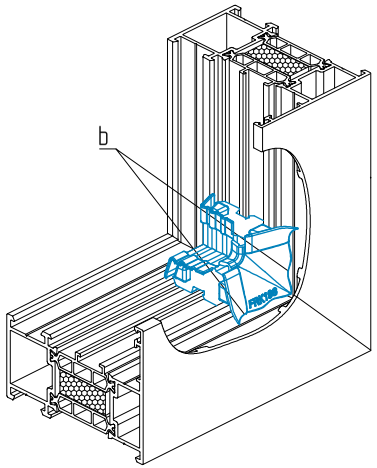

Do not allow burst (a) and deformation (b) while FRK196 installation

3. FRK195 installation

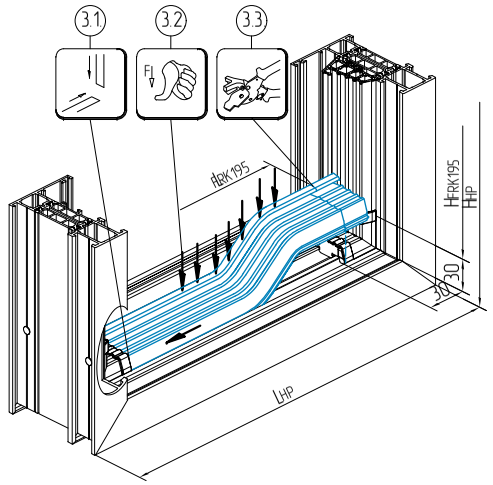

Gasket length calculation	
LBP, HBP	LFRK195, HFRK195
≤ 1000 mm	(LBP, HBP-60)+1%
>1000 mm	(LBP, HBP-60)+0,5%

Do not allow any deformations!
Do not allow gaps!
Do not stretch during installation process!

4. FRK195 and FRK196 sealing and gluing of joints

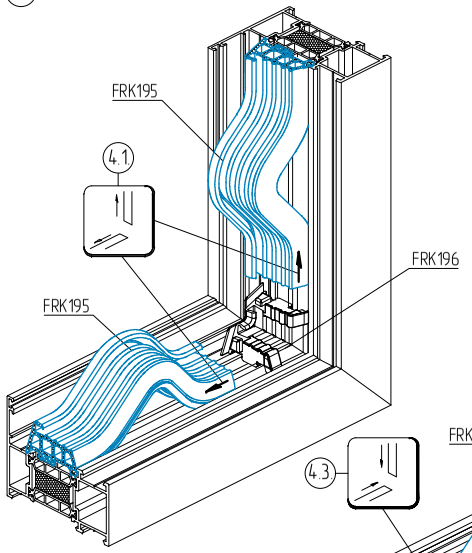

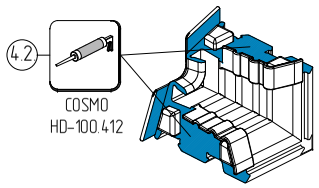

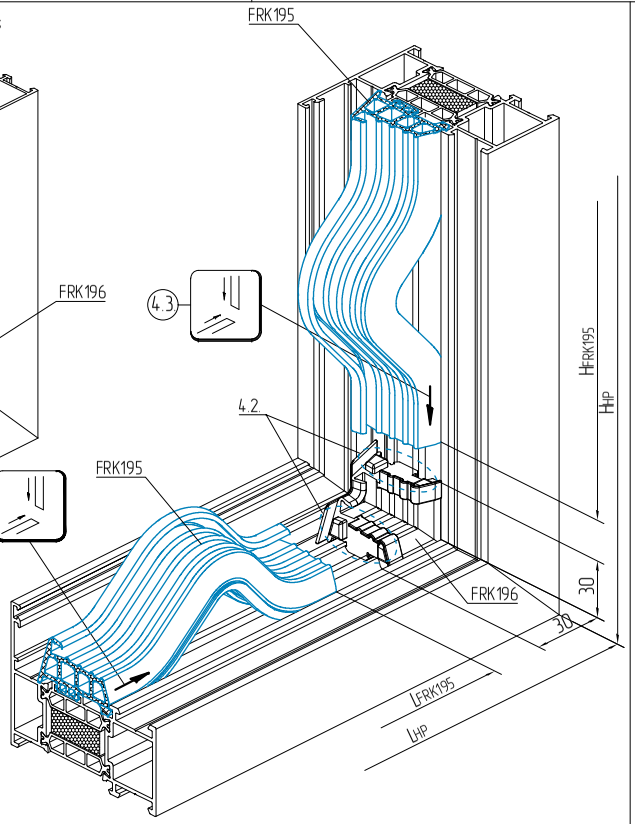

5. Check the correct installation of FRK195 gasket and FRK196 vulcanized corner

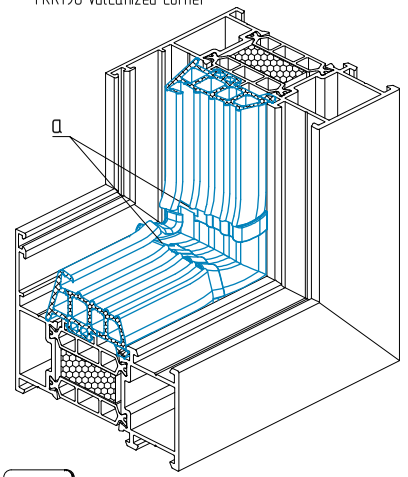

Prevent from gaps and bugles (a) on FRK196 and FRK195 connection

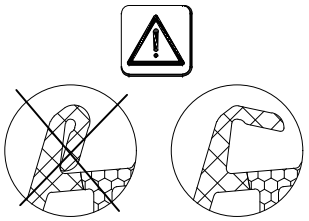

Cutting and installation of FRK101 gasket

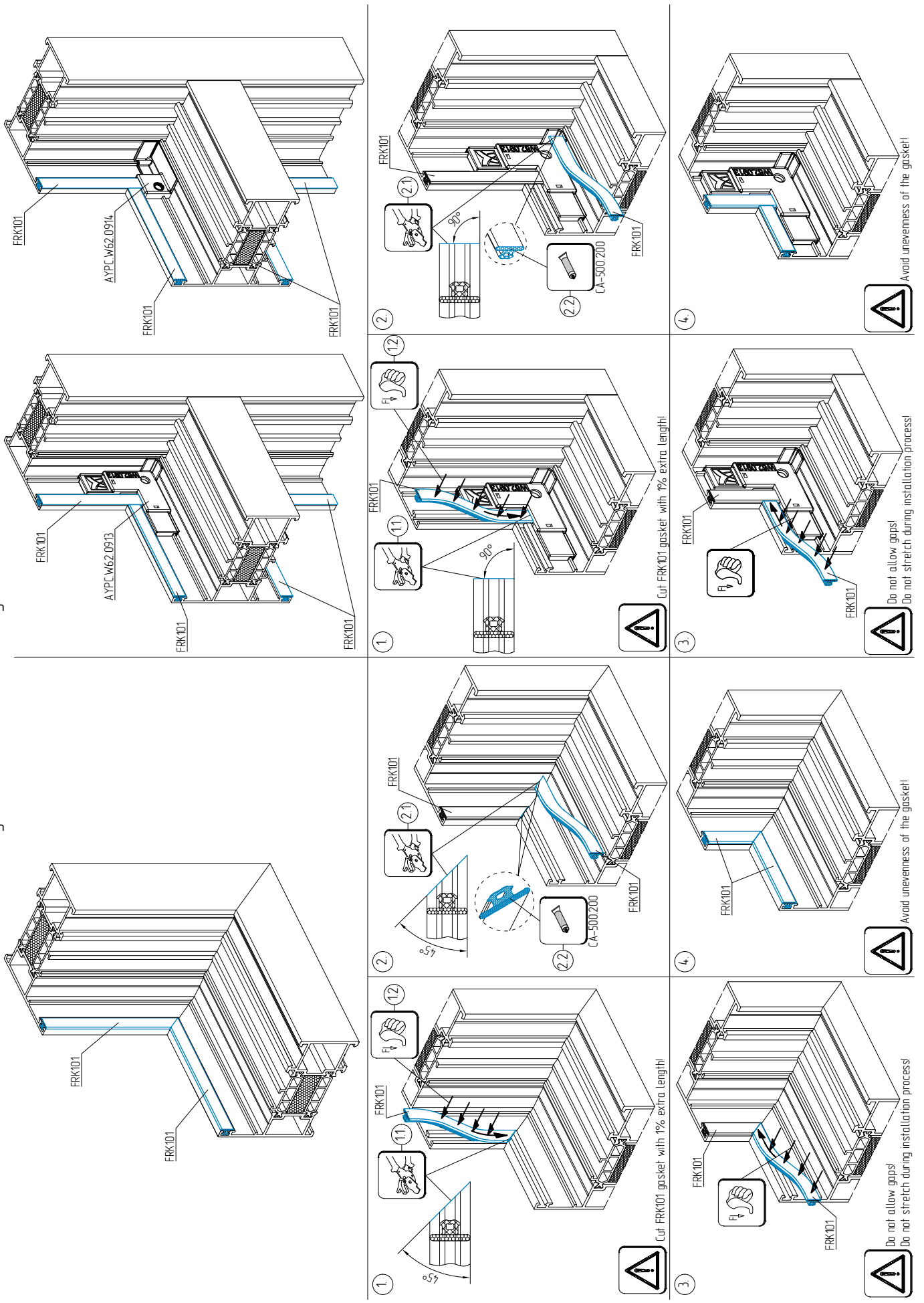
FRK101
AYPC.W62.0914
FRK101
FRK101
FRK101
AYPC.W62.093
FRK101
FRK101
FRK101

Machining and installation of drip bhe window saar profile on tsh

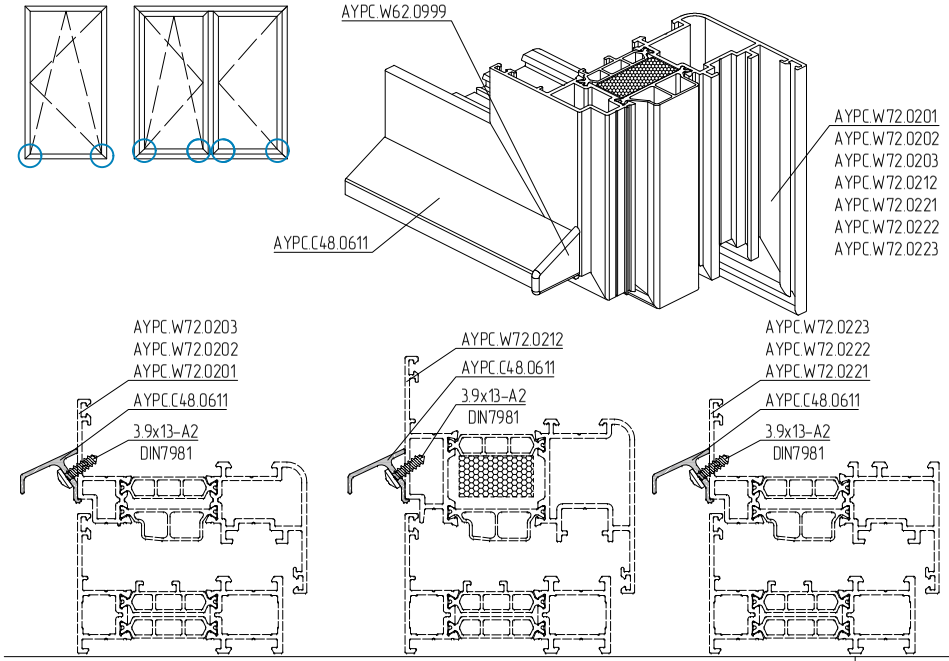

1. Drip bar profile machining

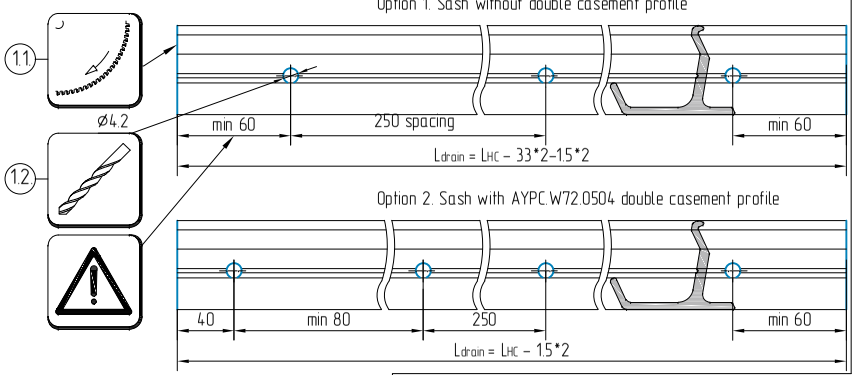

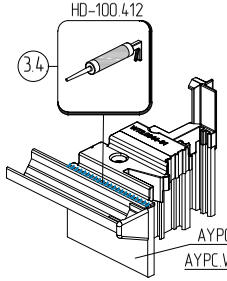

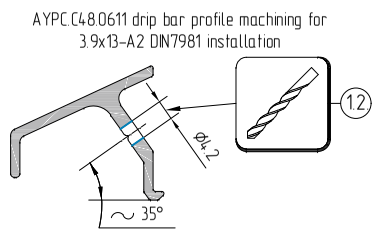

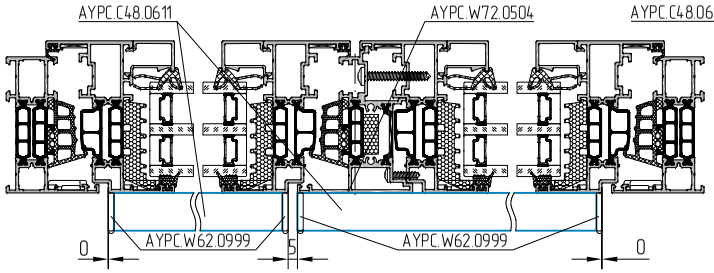

2. AYPC.W62.0999 drip bar profile plug installation

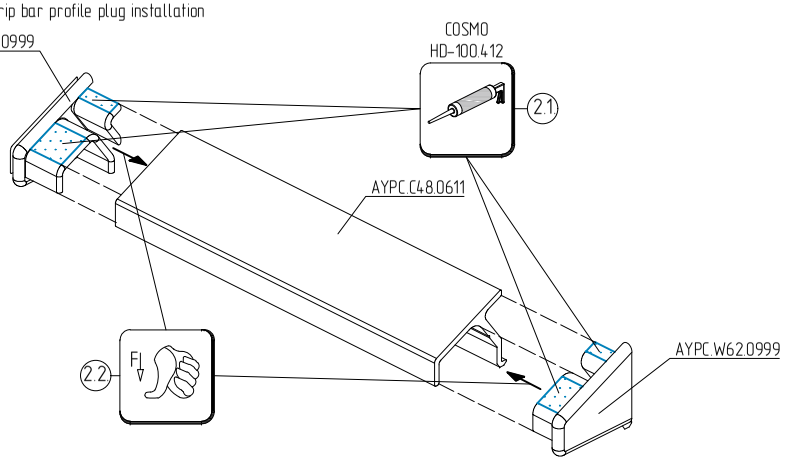

3. Drip bar profile installation

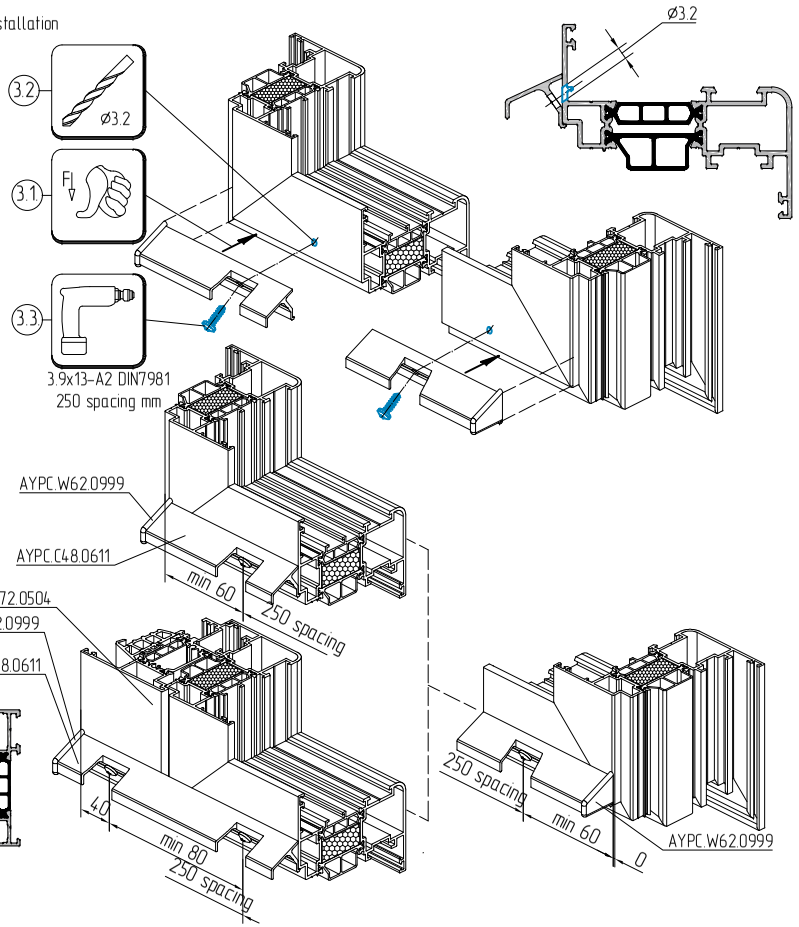

Machining and assembling of bay windows

1. Bay window unit with 90° external angle

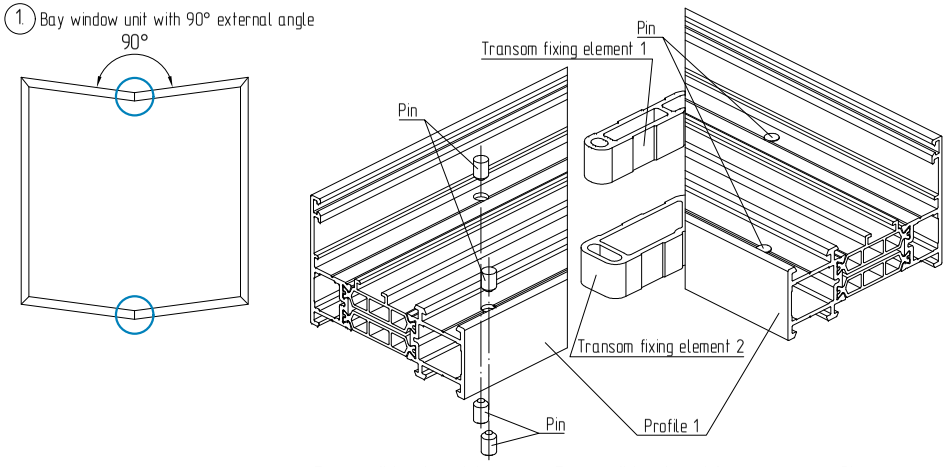

Profile 1	Transom fixing element 1		Transom fixing element 2		Pin	
	Article	Qty, pcs	Article	Qty, pcs	Article	Qty, pcs
AYPC.W72.0101	AYPC.W62.0978	1	AYPC.W62.0979	1	5x8 DIN6325	8
AYPC.W72.0102	AYPC.W62.0978-01	1	AYPC.W62.0979-01	1	5x10 DIN6325D	
AYPC.W72.0103	AYPC.W62.0978-02	1	AYPC.W62.0979-02	1		
AYPC.W72.0106	AYPC.W62.0978-03	2	AYPC.W62.0979-03	2		

2. Bay window unit with 90° internal angle

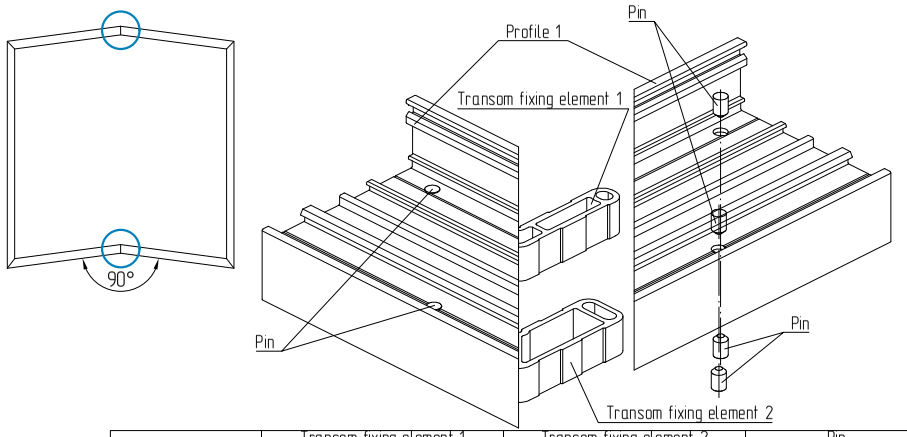

Profile 1	Transom fixing element 1		Transom fixing element 2		Pin	
	Article	Qty, pcs	Article	Qty, pcs	Article	Qty, pcs
AYPC.W72.0101	AYPC.W62.0978	1	AYPC.W62.0979	1	5x8 DIN6325	8
AYPC.W72.0102	AYPC.W62.0978-01	1	AYPC.W62.0979-01	1	5x10 DIN6325D	
AYPC.W72.0103	AYPC.W62.0978-02	1	AYPC.W62.0979-02	1		
AYPC.W72.0106	AYPC.W62.0978-03	2	AYPC.W62.0979-03	2		

3. Bay window unit with 90°–180° external angle

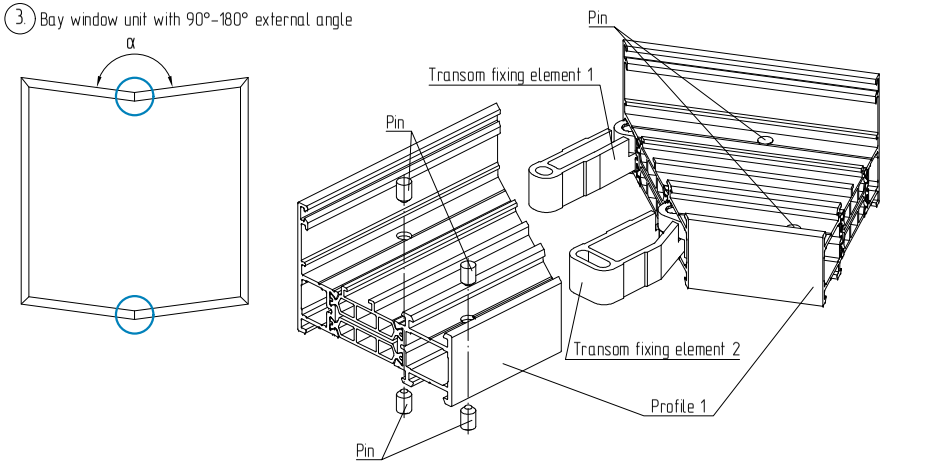

Profile 1	Transom fixing element 1		Transom fixing element 2		Pin	
	Article	Qty, pcs	Article	Qty, pcs	Article	Qty, pcs
AYPC.W72.0101	AYPC.W62.0982	1	AYPC.W62.0984	1	5x8 DIN6325	8
AYPC.W72.0102	AYPC.W62.0982-01	1	AYPC.W62.0984-01	1	5x10 DIN6325D	
AYPC.W72.0103	AYPC.W62.0982-02	1	AYPC.W62.0984-02	1		
AYPC.W72.0106	AYPC.W62.0982-03	2	AYPC.W62.0984-03	2		

4. Bay window unit with 90°–180° internal angle

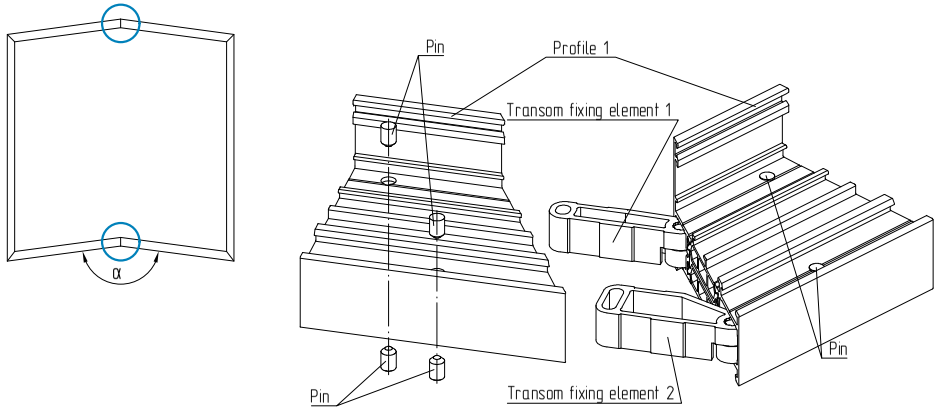

Profile 1	Transom fixing element 1		Transom fixing element 2		Pin	
	Article	Qty, pcs	Article	Qty, pcs	Article	Qty, pcs
AYPC.W72.0101	AYPC.W62.0982	1	AYPC.W62.0984	1	5x8 DIN6325	8
AYPC.W72.0102	AYPC.W62.0982-01	1	AYPC.W62.0984-01	1	5x10 DIN6325D	
AYPC.W72.0103	AYPC.W62.0982-02	1	AYPC.W62.0984-02	1		
AYPC.W72.0106	AYPC.W62.0982-03	2	AYPC.W62.0984-03	2		

Assembly of the frame/transom corner connection of the bay window

1.

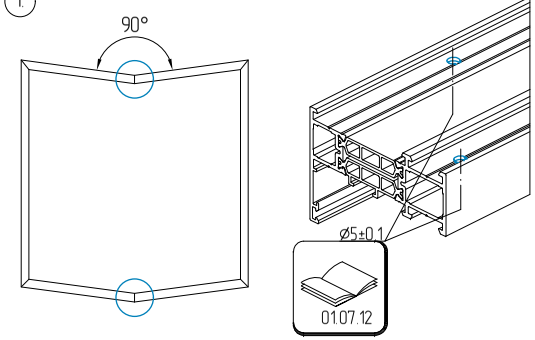

2.

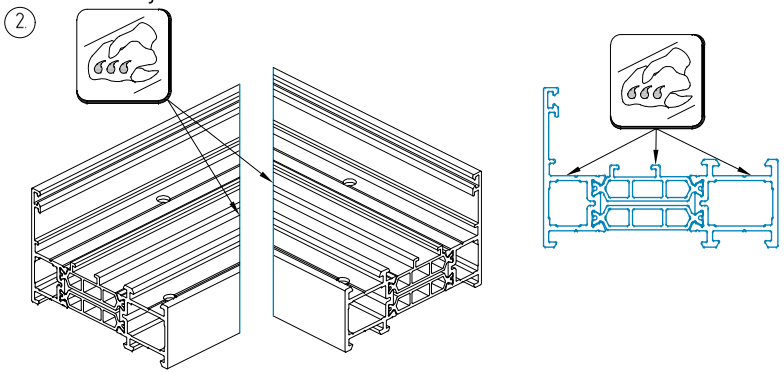

3.

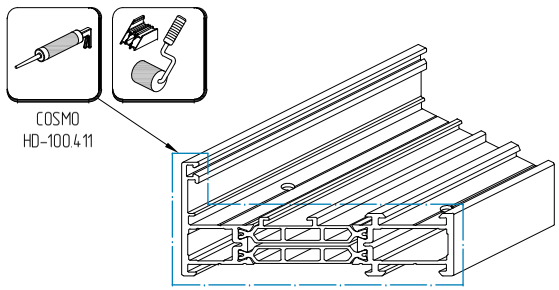

4.

Fill profile chambers with the glue to the depth of clamping corner installation

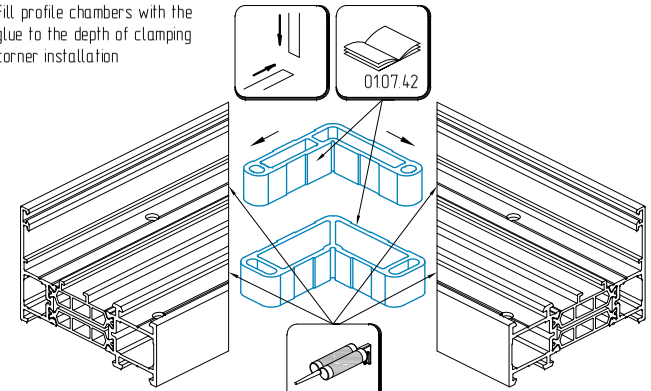

COSMO PU-100.130
or
COSMO PU-200.280

5.

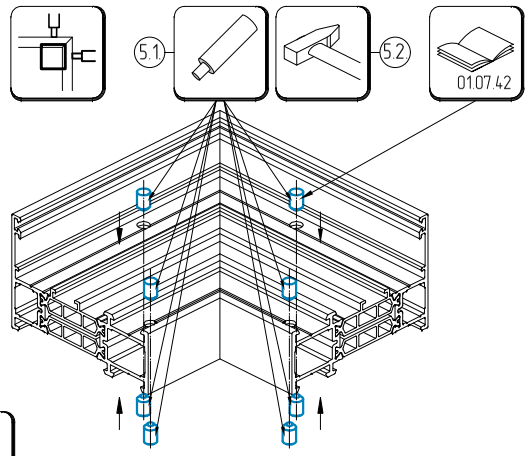

Make sure to use the stop!

6.

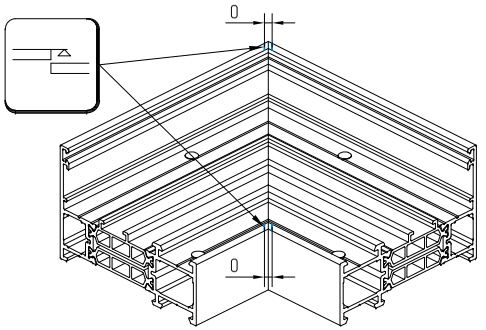

7.

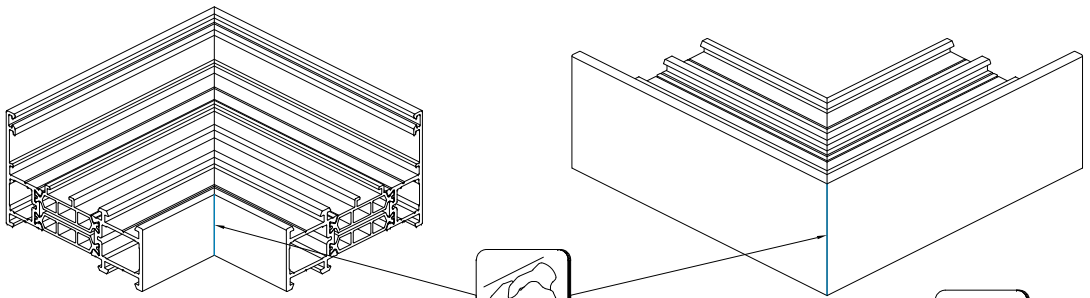

COSMO
CL-300.150

24h

Place the assembled article in the reserved place until the glue is completely dry according to the recommendations of the glue supplier

Assembly of the transom corner connections and horizontal transoms is allowed only using AYPC.W72.0840 connecting profile

Assembly of the frame/transom corner connection of the bay window

1.

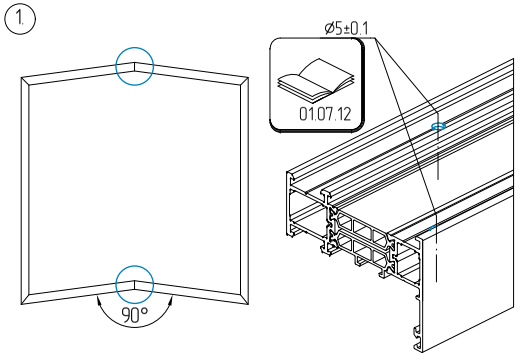

2.

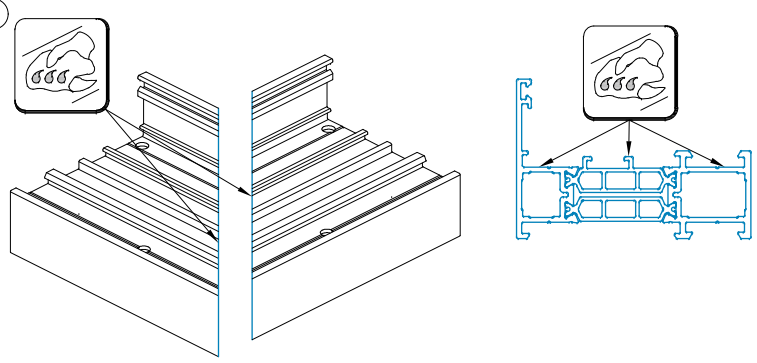

3.

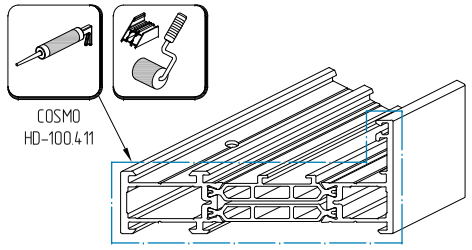

4.

Fill profile chambers with the glue to the depth of clamping corner installation

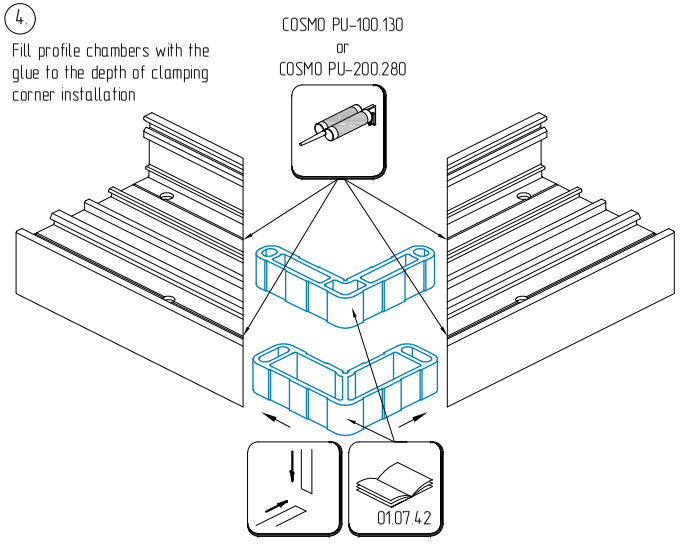

5.

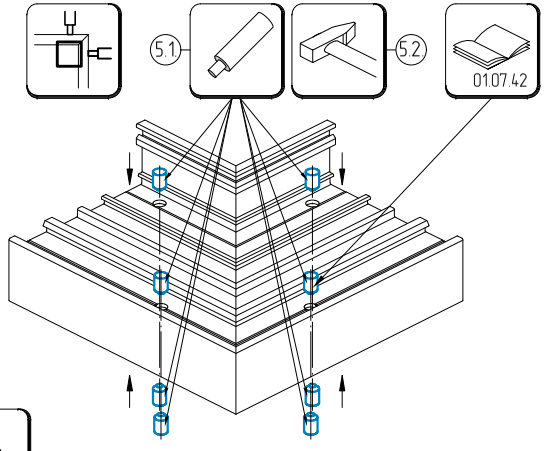

Make sure to use the stop!

6.

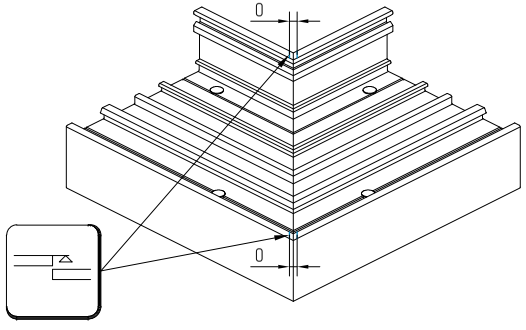

7.

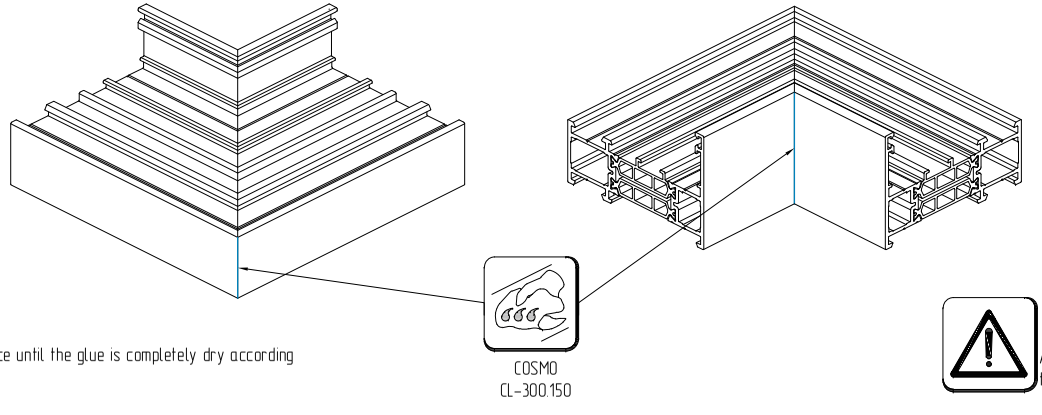

24h Place the assembled article in the reserved place until the glue is completely dry according to the recommendations of the glue supplier

Assembly of the transom corner connections and horizontal transoms is allowed only using AYPC.W72.0841N connecting profile

Assembly of the frame corner connection of the bay window

Assembly and installation of AYPC.W62.0982 (-01, -02, -03) and AYPC.W62.0984 (-01, -02, -03) clamping corners

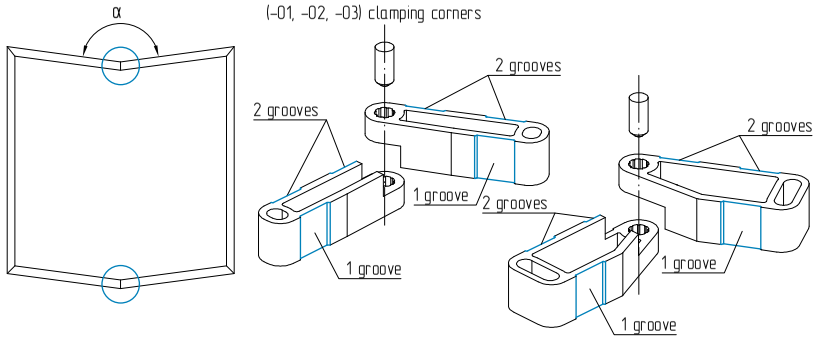

1.

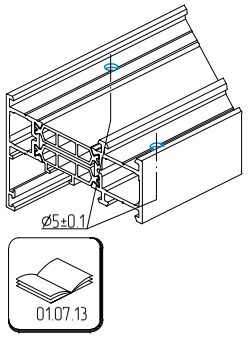

2.

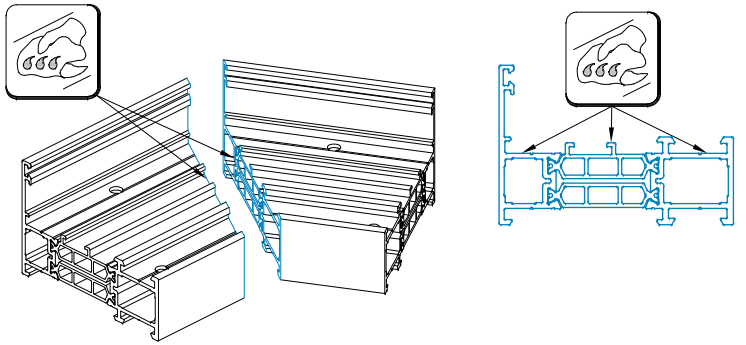

3.

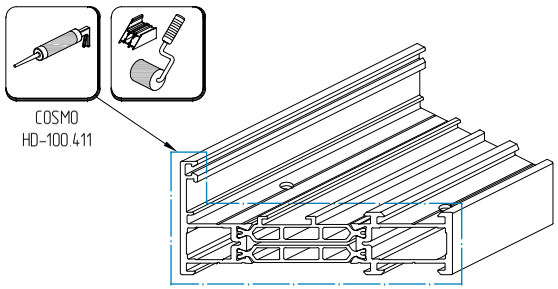

4.

Fill profile chambers with the glue to the depth of clamping corner installation

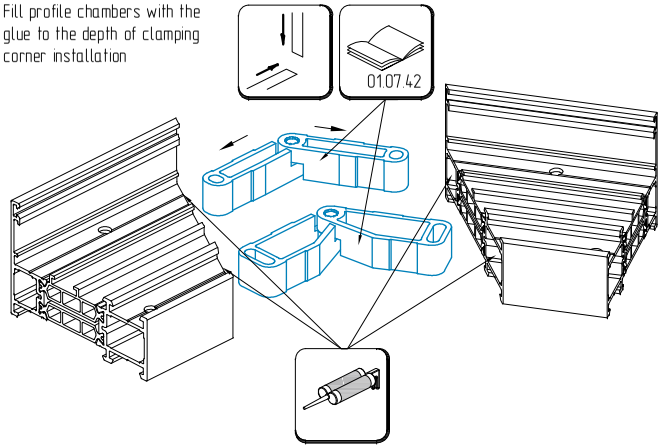

5.

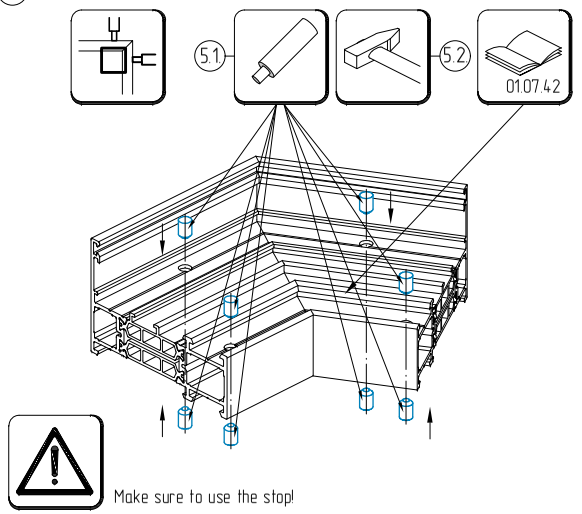

6.

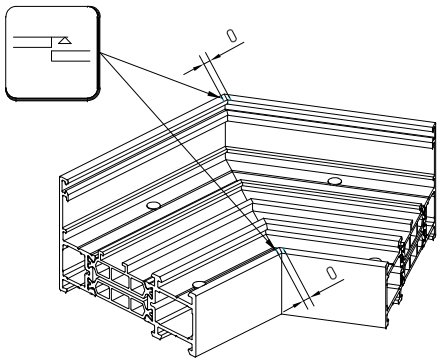

7.

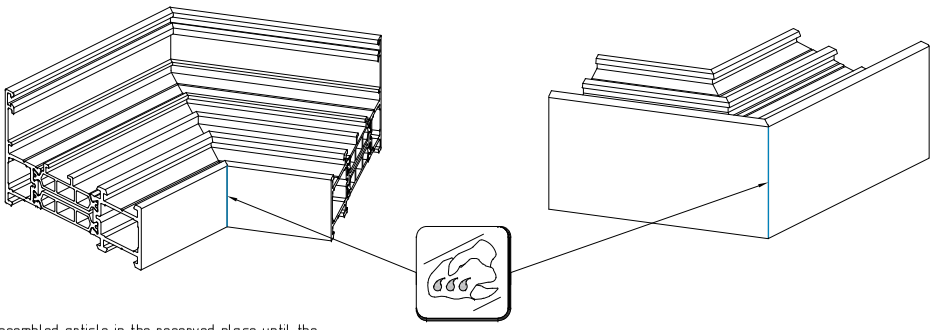

Assembly of the frame corner connection of the bay window

Assembly and installation of AYPC.W62.0982 (-01, -02, -03) and AYPC.W62.0984 (-01, -02, -03) clamping corners

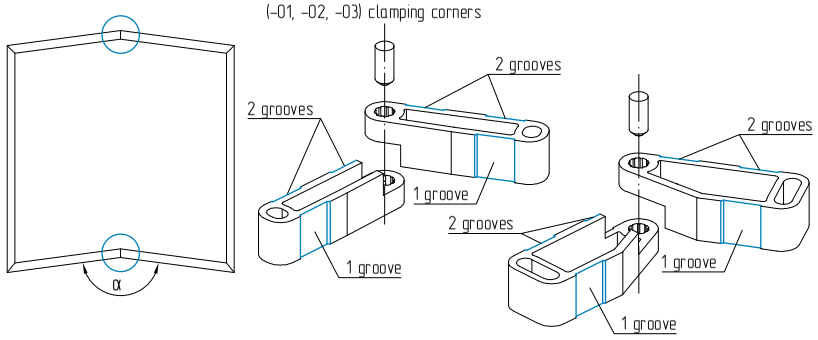

1.

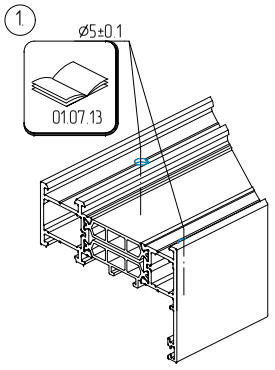

2.

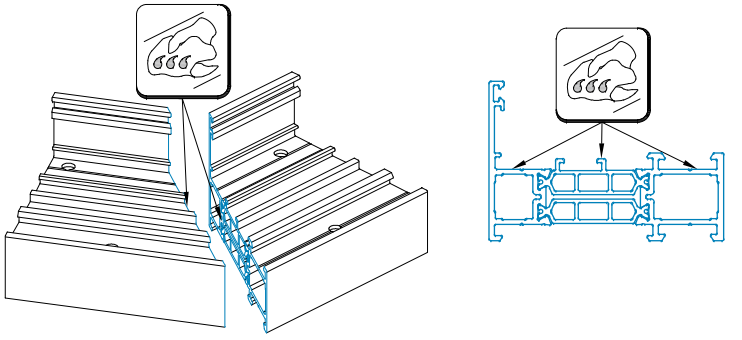

3.

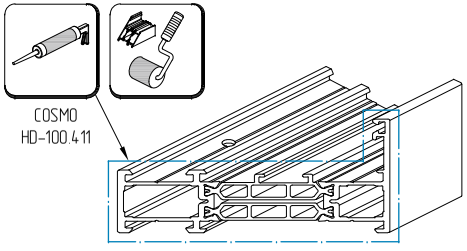

4.

Fill profile chambers with the glue to the depth of clamping corner installation

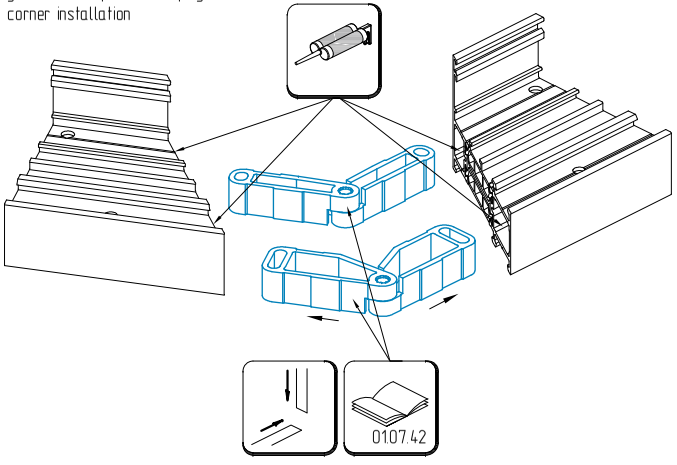

5.

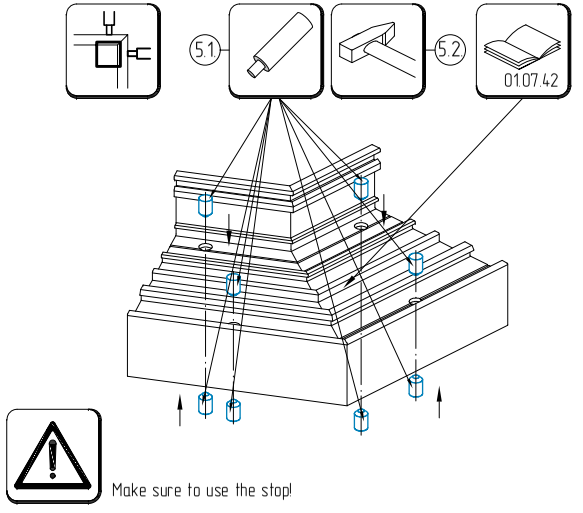

Make sure to use the stop!

6.

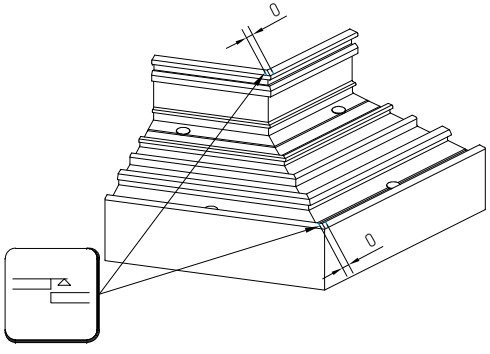

7.

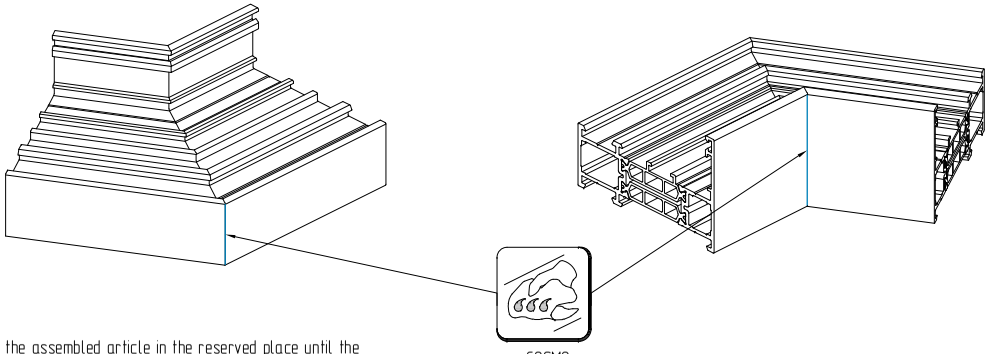

24h

Place the assembled article in the reserved place until the glue is completely dry according to the recommendations of the glue supplier

Accessories selection and profile machining for 90° corner connection

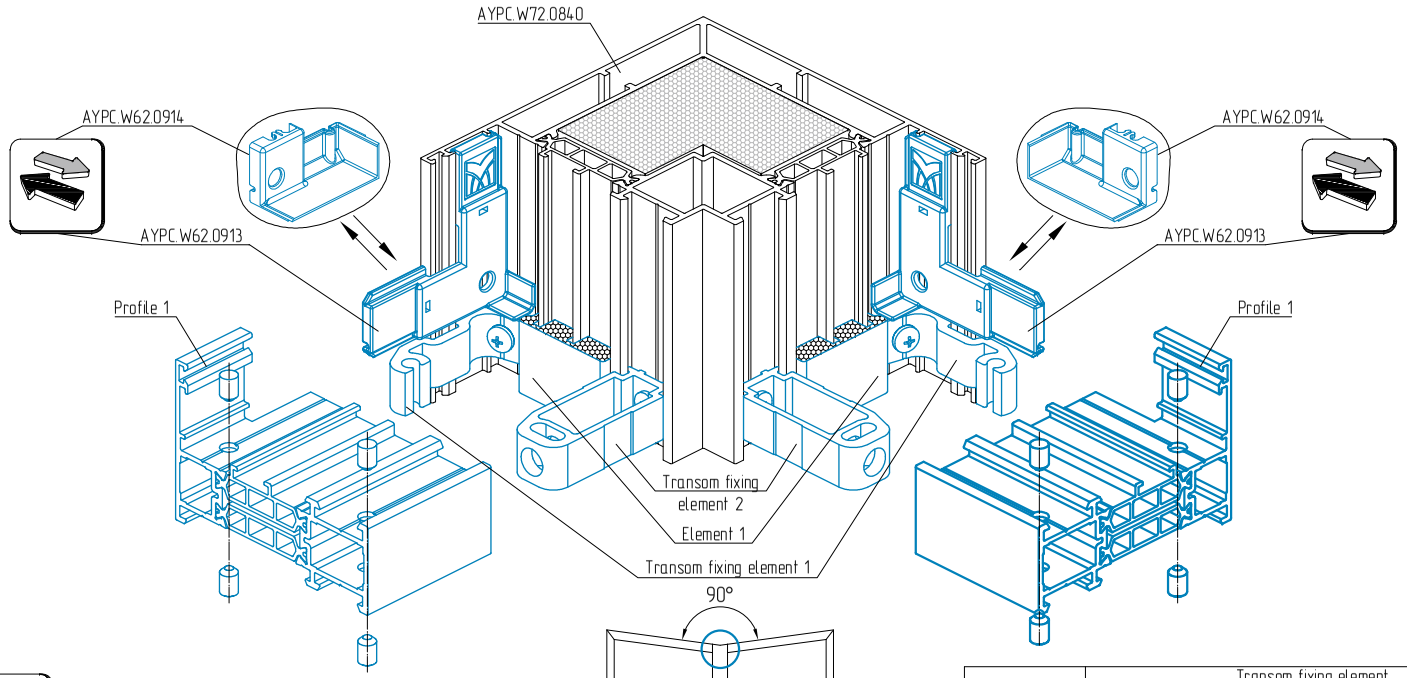

Machining of profile 1

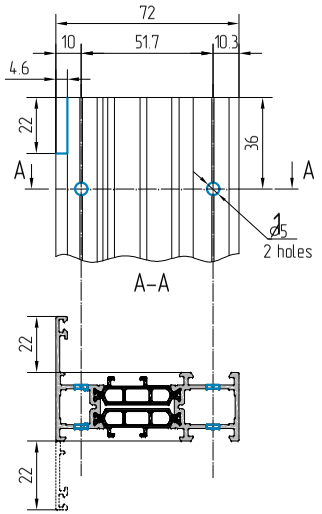

0107.23

AYPC.W62.0913 installation is done before assembling.
AYPC.W62.0914 installation is done after assembling

Profile 1	Transom fixing element				Element 1		
	Transom fixing element 1		Transom fixing element 2				
	Article	Qty, pcs	Article	Qty, pcs	Article	Qty, pcs	Image
AYPC.W72.0101 AYPC.W72.0301	AYPC.W62.0951	1	AYPC.W62.0973	1	AYPC.W62.0916	1	
AYPC.W72.0102 AYPC.W72.0302	AYPC.W62.0951-01	1	AYPC.W62.0973-01	1	AYPC.W62.0916-01	1	
AYPC.W72.0103 AYPC.W72.0303	AYPC.W62.0951-02	1	AYPC.W62.0973-02	1	AYPC.W62.0916-02	1	
AYPC.W72.0106	AYPC.W62.0951-03	2	AYPC.W62.0973-03	2	AYPC.W62.0916-03	1	

Transom fixing element

Initial profile – AYPC.W62.0701

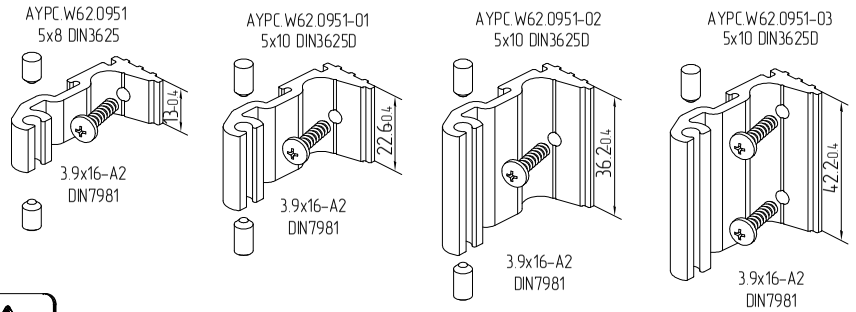

Initial profile – AYPC.W62.0705

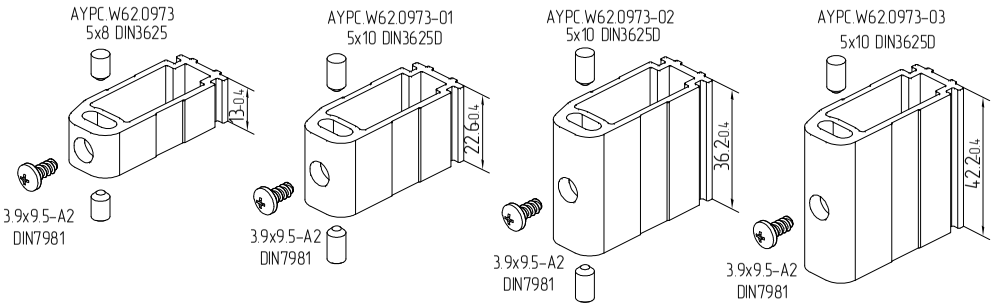

Ensure that the number of holes and installed pins corresponds to that specified in the instruction!
Reduction of the number of pins and holes will result in loss of strength characteristics of structure.
Prevent replacement of pins with self-tapping screws!

Assembly of profile corner connection (bay window) at an angle 90°. External angle

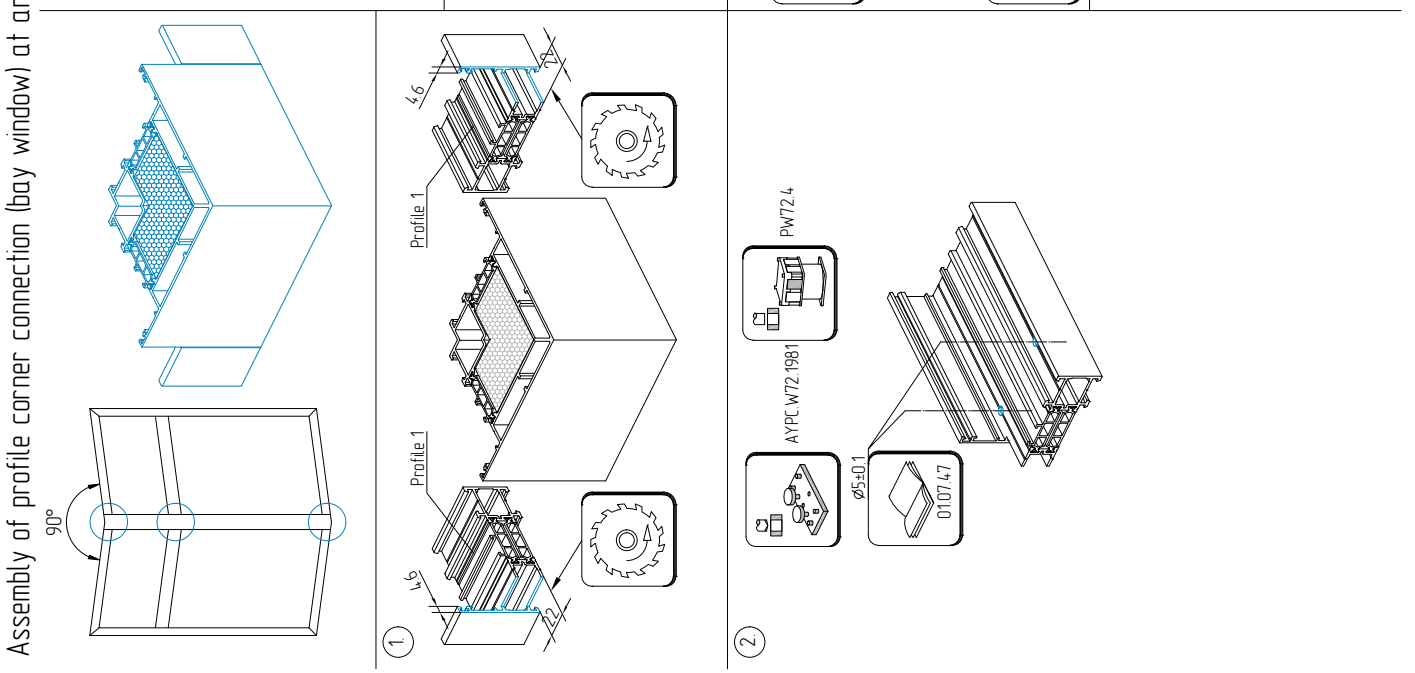

Accessories selection and profile machining for 90° corner connection

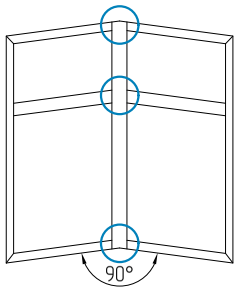

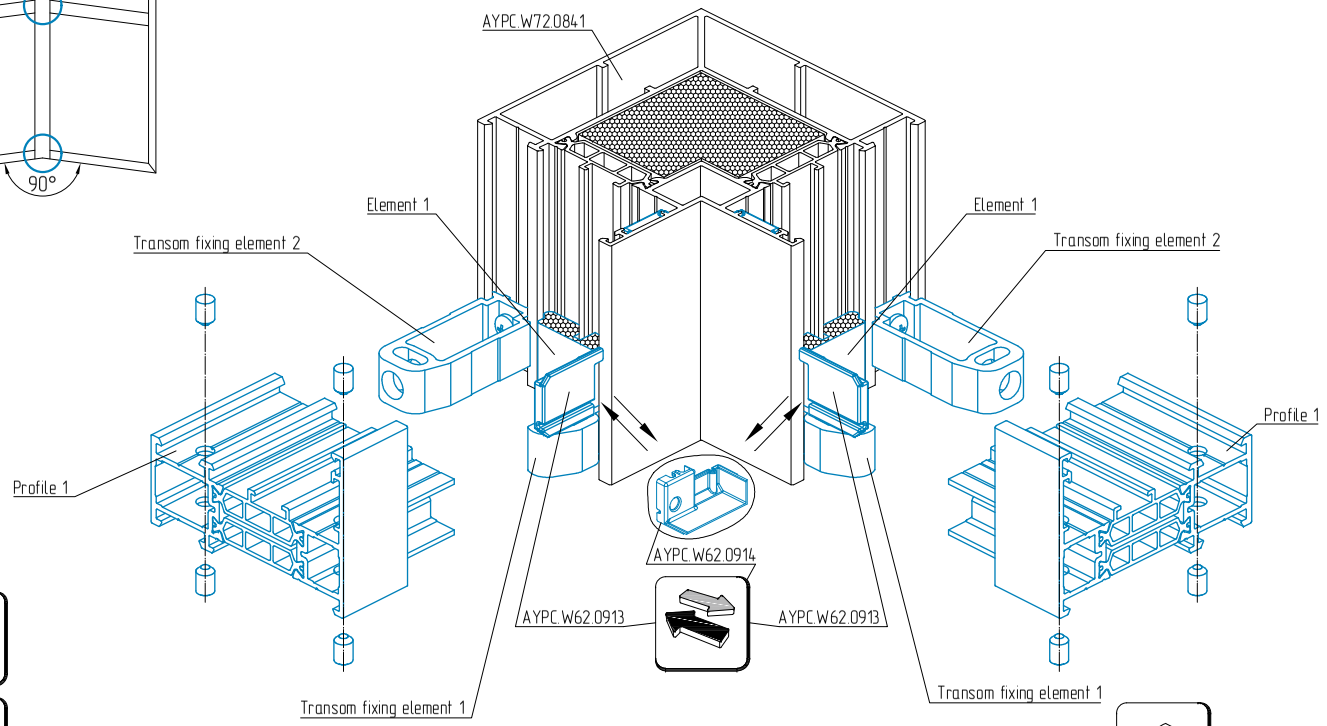

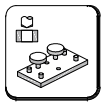
AYPC.W72.1981

PW72.4

Machining scheme of profile 1

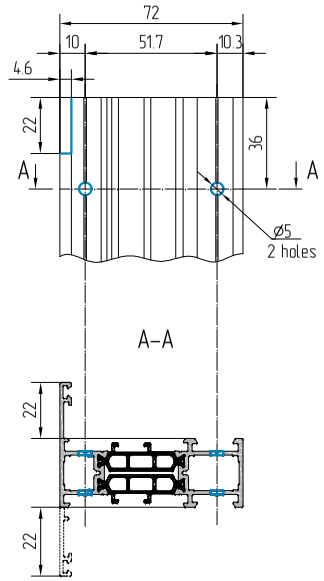

0107.23

AYPC.W62.0913 installation is done before assembling.
AYPC.W62.0914 installation is done after assembling

01.07.47 Configuration table

Transom fixing element

Initial profile – AYPC.W62.0701

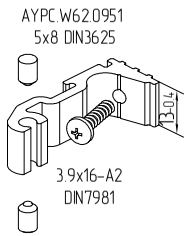

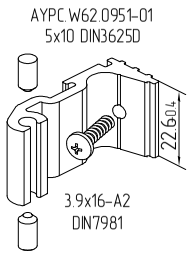

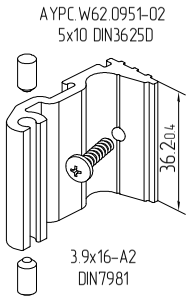

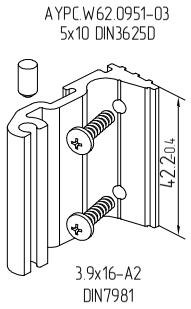

Initial profile – AYPC.W62.0705

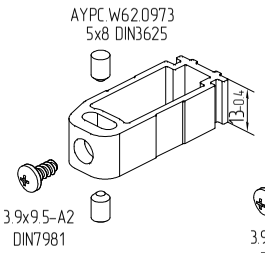

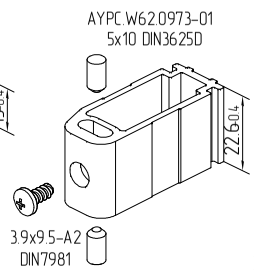

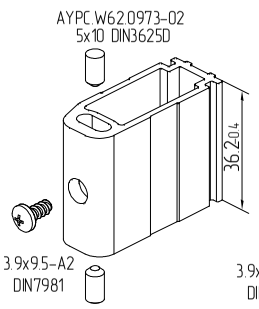

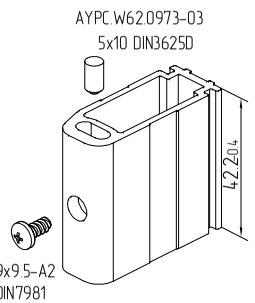

Ensure that the number of holes and installed pins corresponds to that specified in the instruction!
Reduction of the number of pins and holes will result in loss of strength characteristics of structure.
Prevent replacement of pins with self-tapping screws!

Assembly of profile corner connection (bay window) at an angle 90°. Internal angle

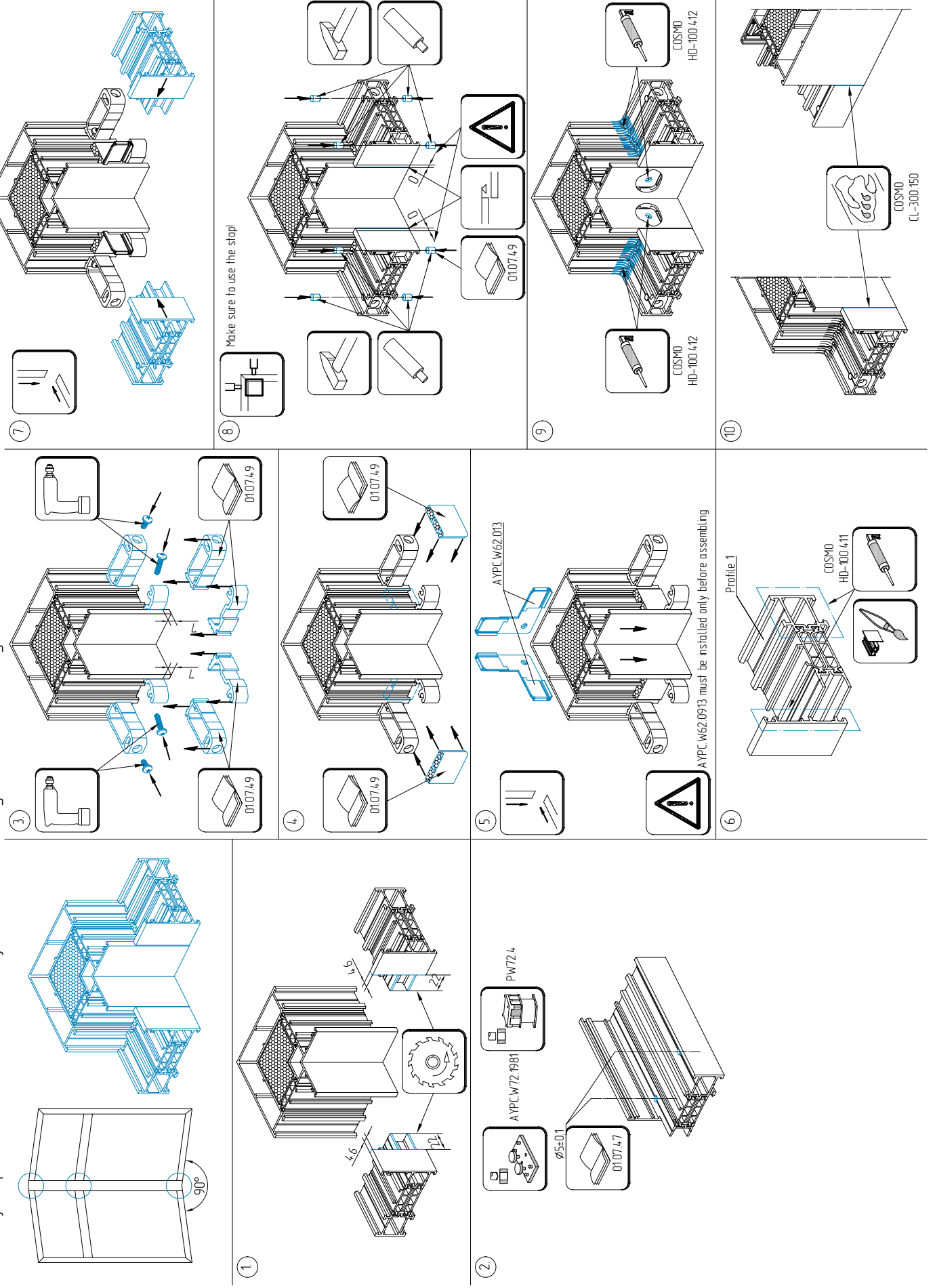

Assembly of 105° – 220° corner

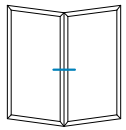

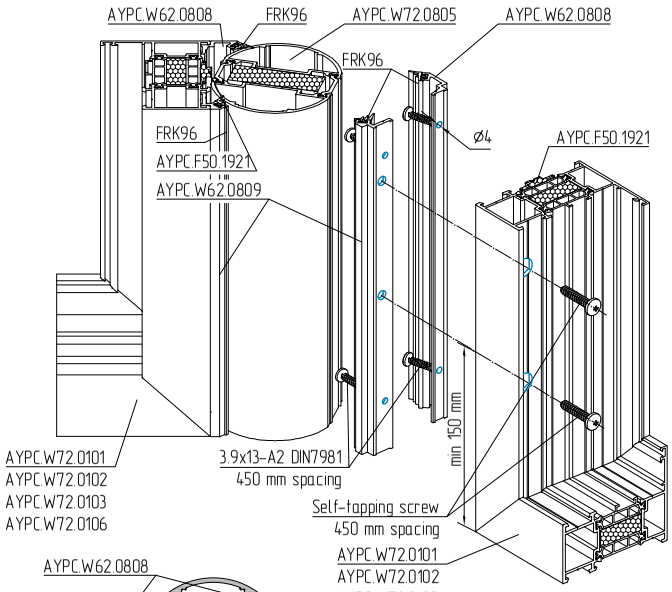

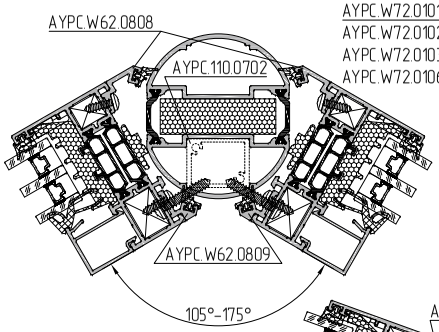

Applicability of self-tapping screws	
Frame profile	Self-tapping screw
AYPC.W72.0101	4.8x25-A2 DIN7981
AYPC.W72.0102	
AYPC.W72.0103	

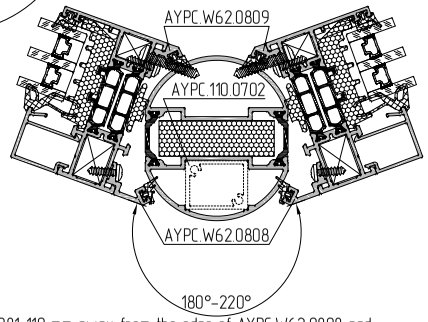

Applicability of self-tapping screws	
Frame profile	Self-tapping screw
AYPC.W72.0101	4.8x25-A2 DIN7981
AYPC.W72.0102	
AYPC.W72.0103	

Install 3.9x13-A2 DIN7981 110 mm away from the edge of AYPC.W62.0808 and AYPC.W62.0809 profiles

Assembly of 90° corner

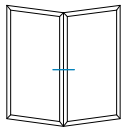

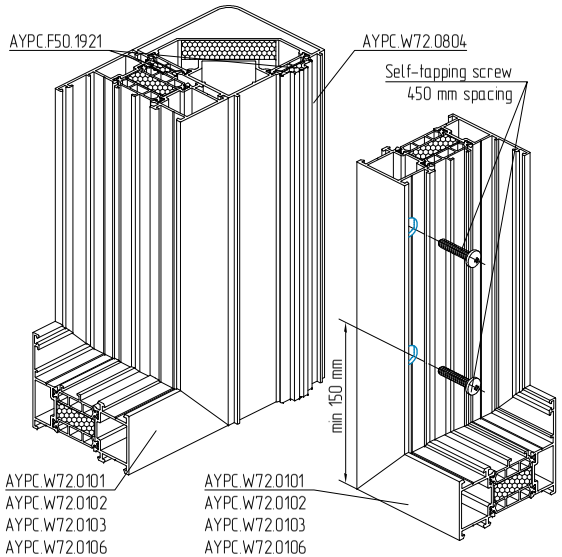

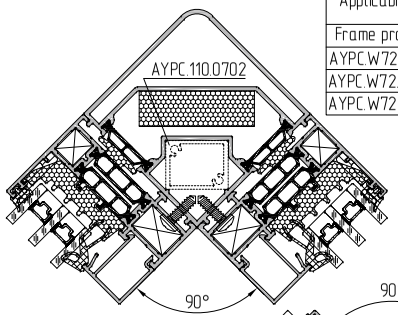

Applicability of self-tapping screws	
Frame profile	Self-tapping screw
AYPC.W72.0101	4.8x16-A2 DIN7981
AYPC.W72.0102	
AYPC.W72.0103	

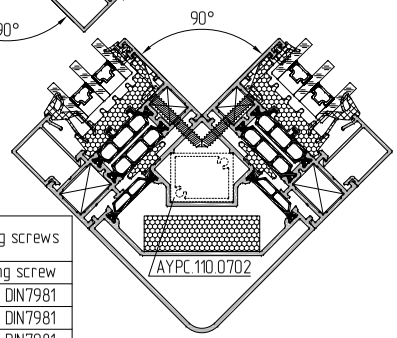

Applicability of self-tapping screws	
Frame profile	Self-tapping screw
AYPC.W72.0101	4.8x32-A2 DIN7981
AYPC.W72.0102	4.8x45-A2 DIN7981
AYPC.W72.0103	4.8x60-A2 DIN7981

Temperature compensation connection

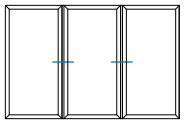

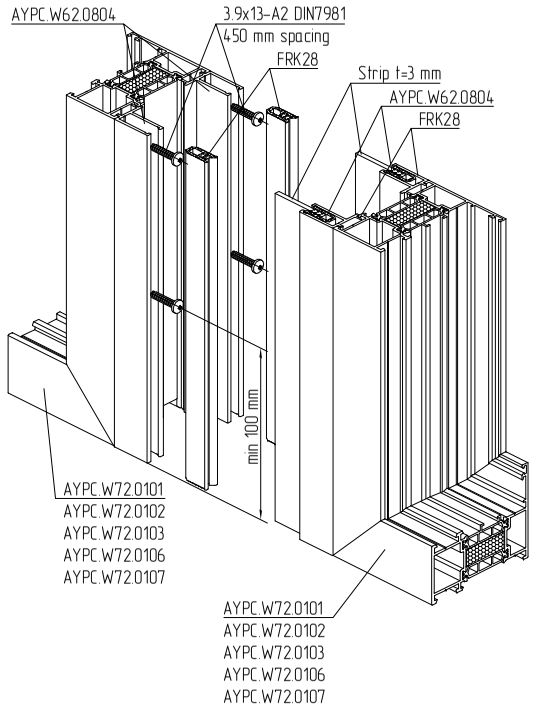

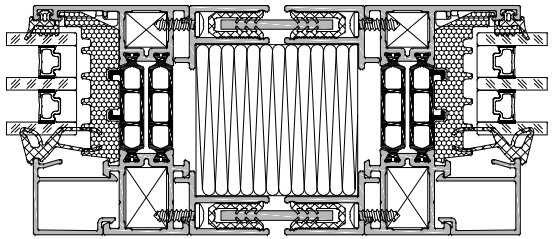

Assembly of transom bar connections

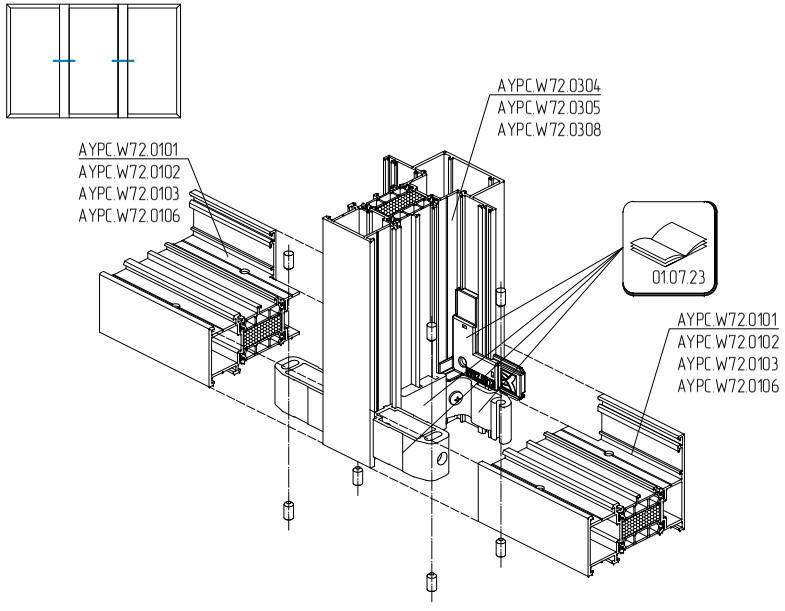

Assembly of transom bar connections

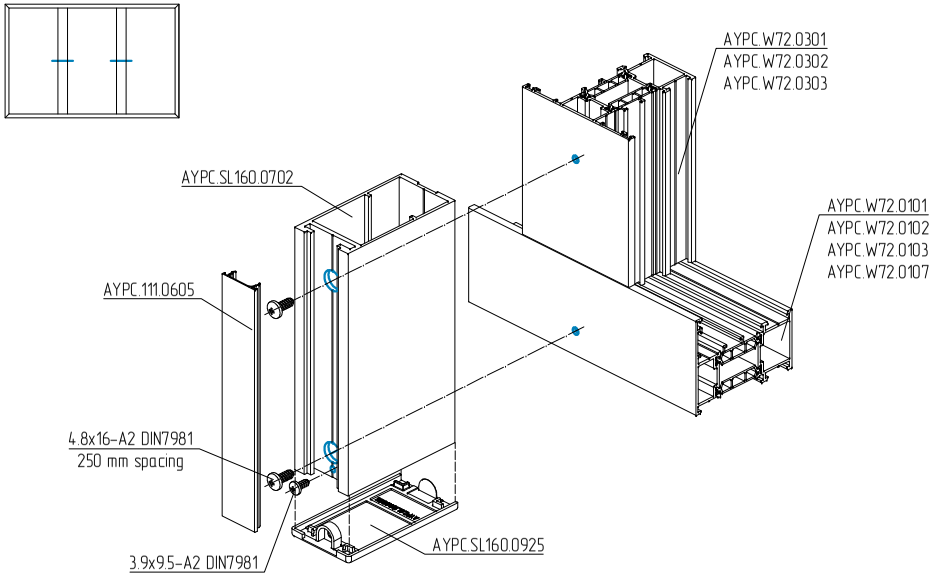

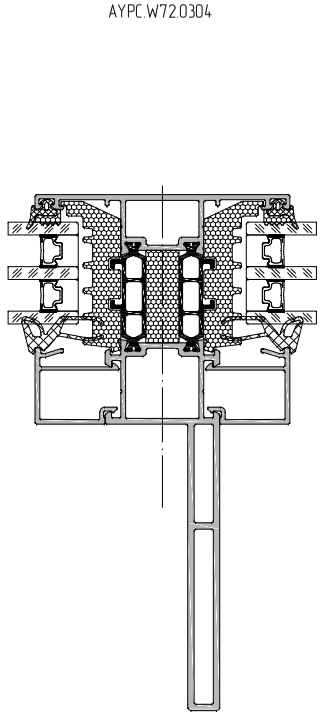

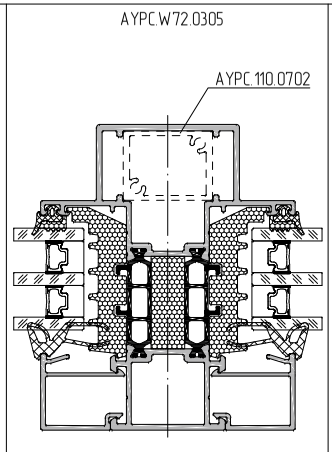

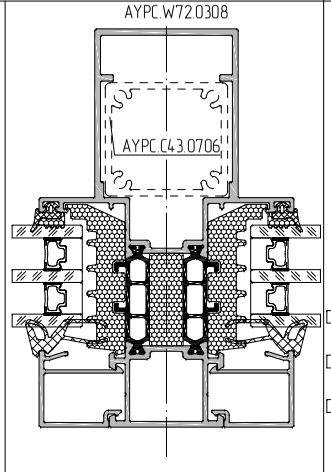

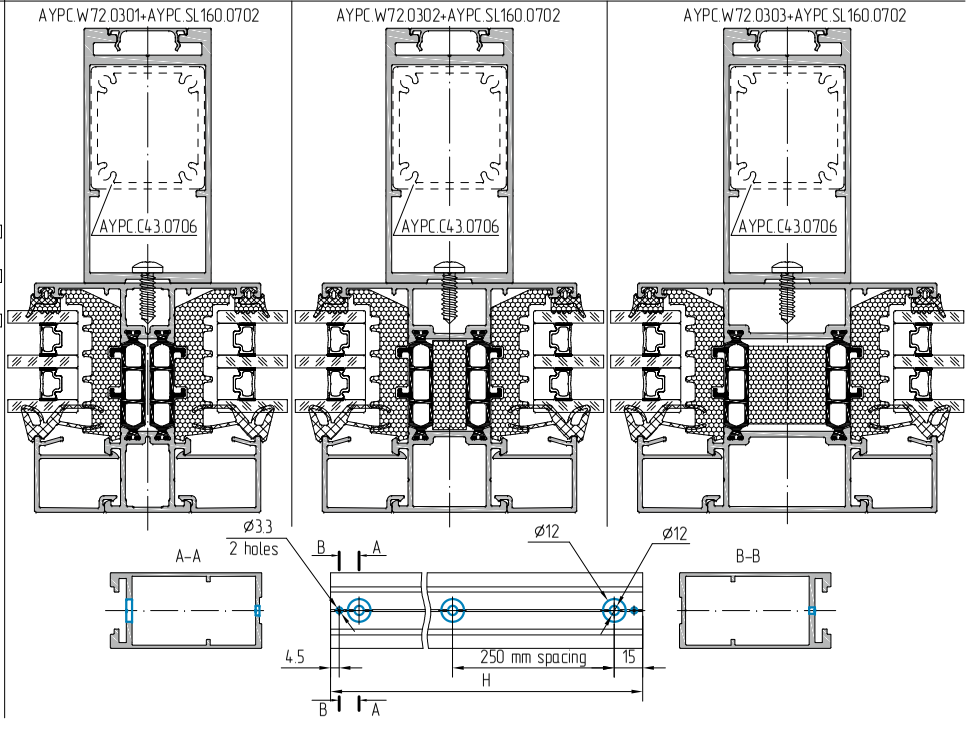

Machining and installation AYofPC.W72.0504 double casement profile

1. Machining of double casement profile

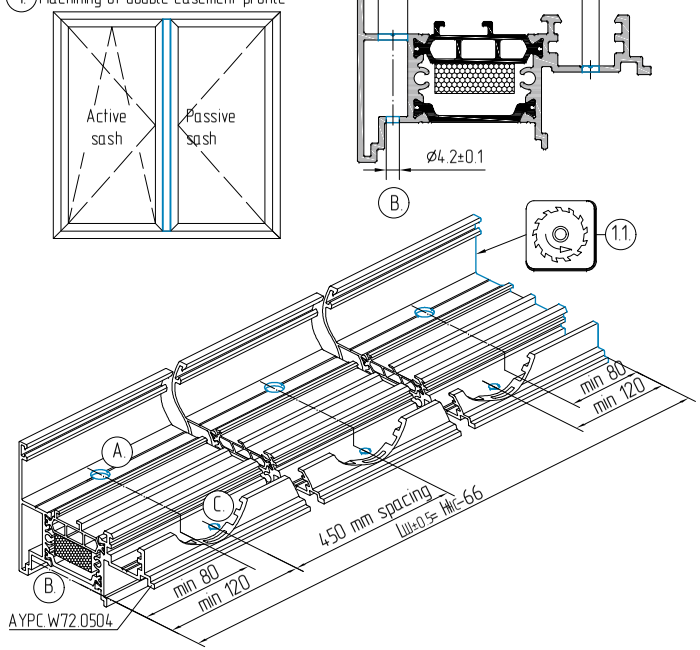

2. Sash profile machining for double casement profile installation

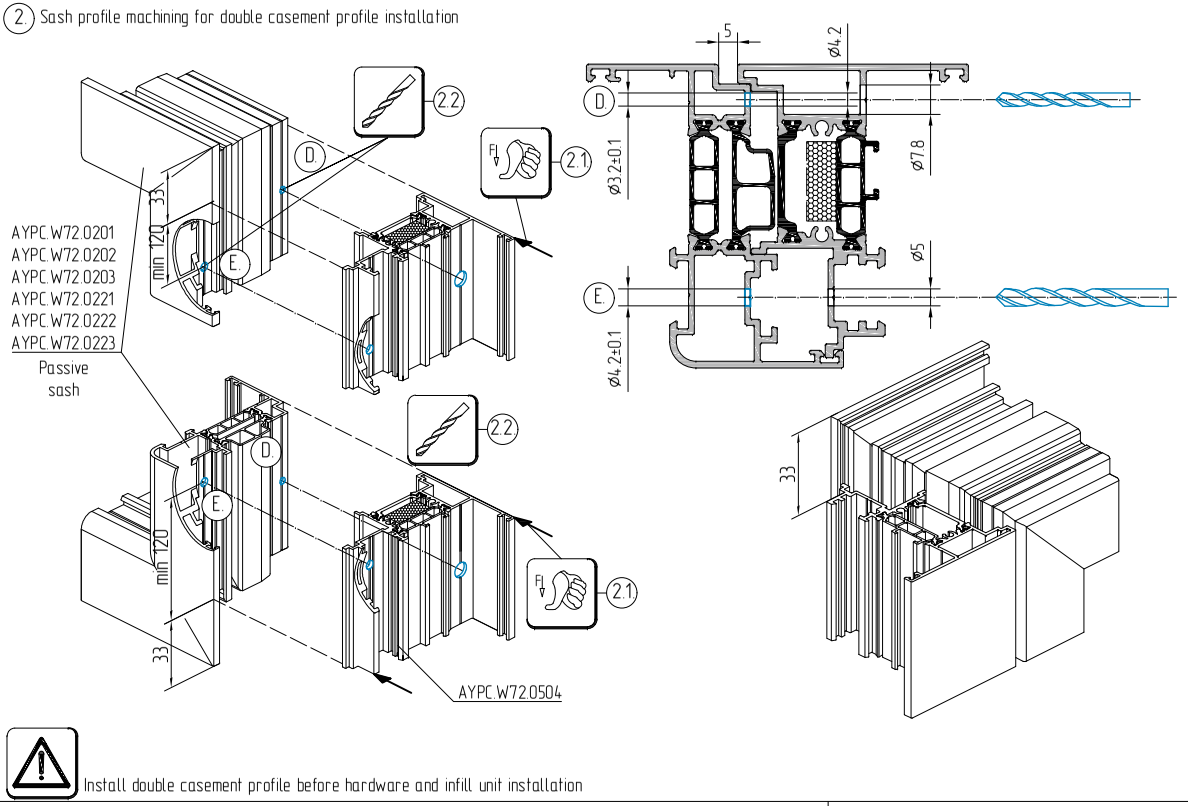

Install double casement profile before hardware and infill unit installation

3. Machining of AYPC.W72.0504 double casement profile

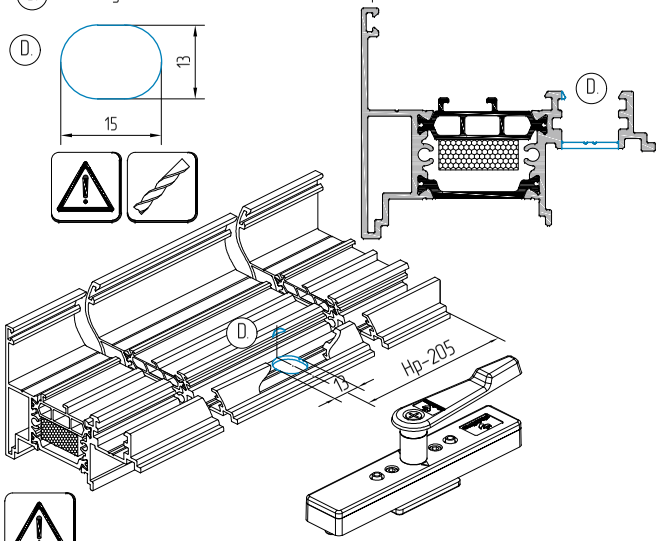

The height to the handle is determined according to the recommendation of the hardware supplier

4. AYPC.W72.0944 and AYPC.W72.0944-01 double casement plug installation

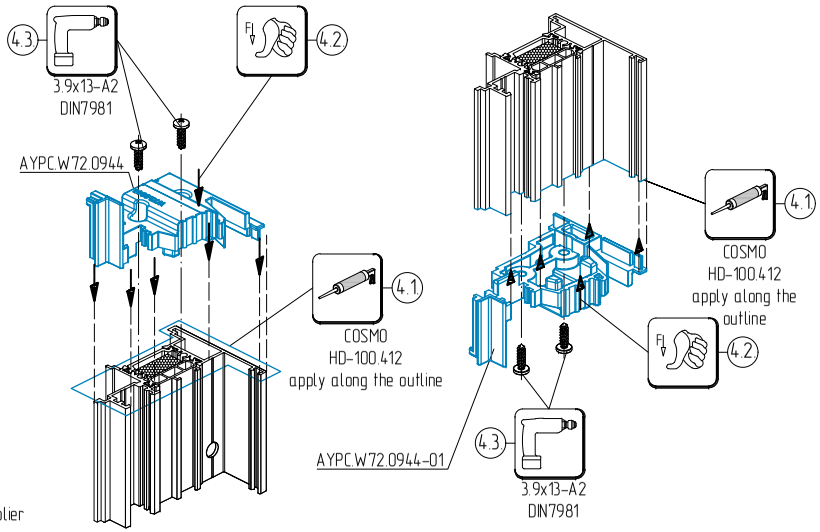

5. Cutting of AYPC.W72.0944-01 double casement bottom plug for drip bar profile installation

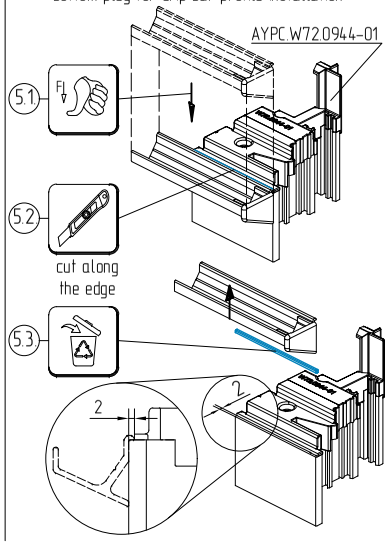

6. Double casement profile fastening to the sash profile

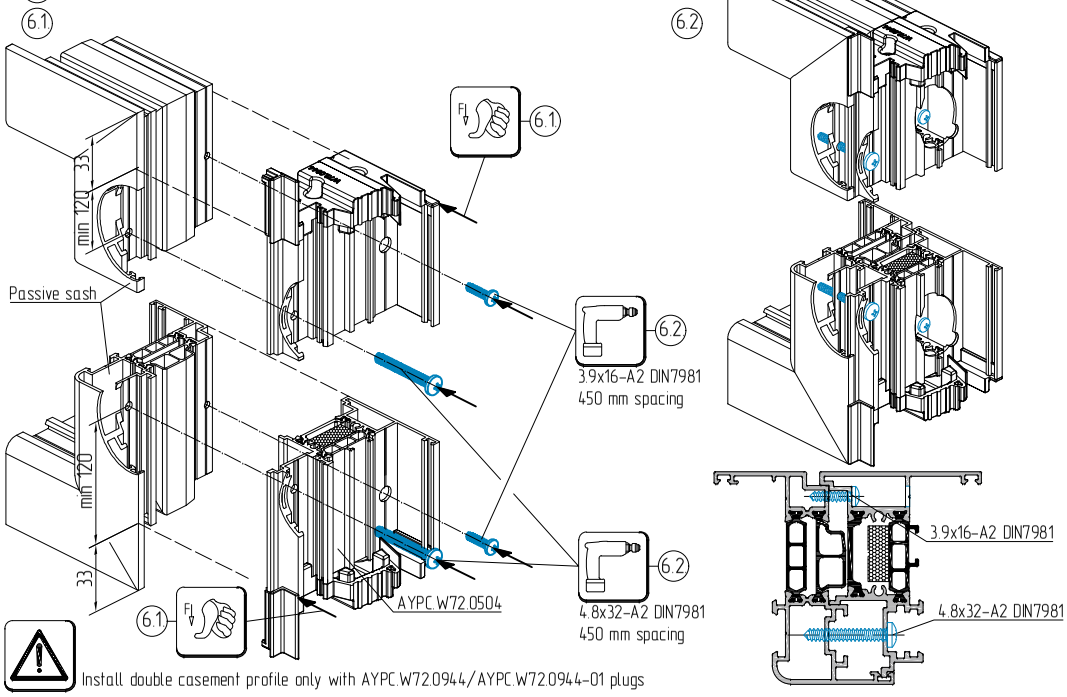

Install double casement profile only with AYPC.W72.0944/AYPC.W72.0944-01 plugs

7. Installation of FRK98 gasket on passive sash

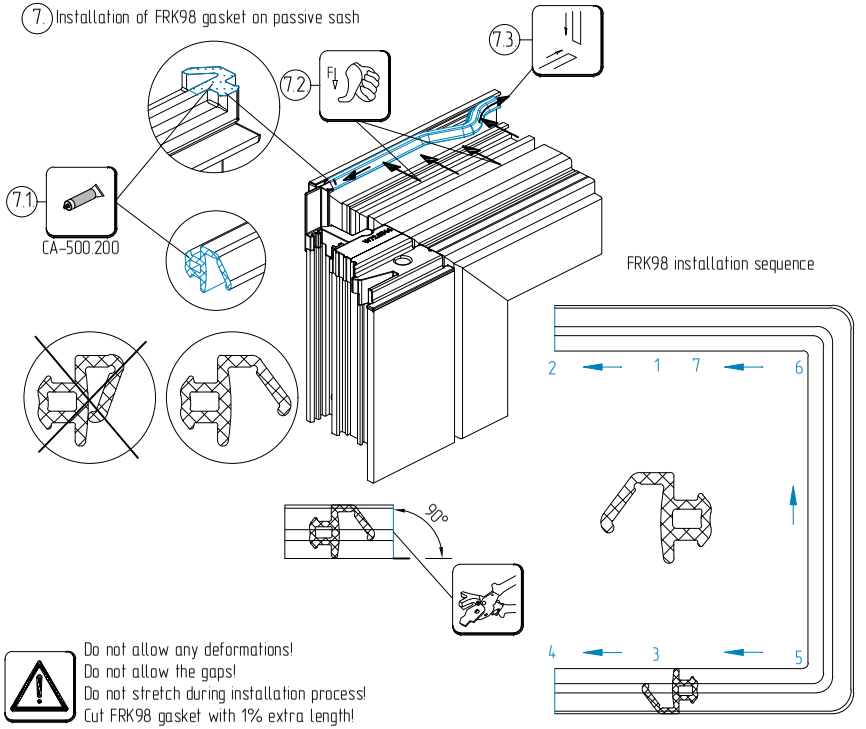

Do not allow any deformations!
Do not allow the gaps!
Do not stretch during installation process!
Cut FRK98 gasket with 1% extra length!

8. FRK195 gasket cutting

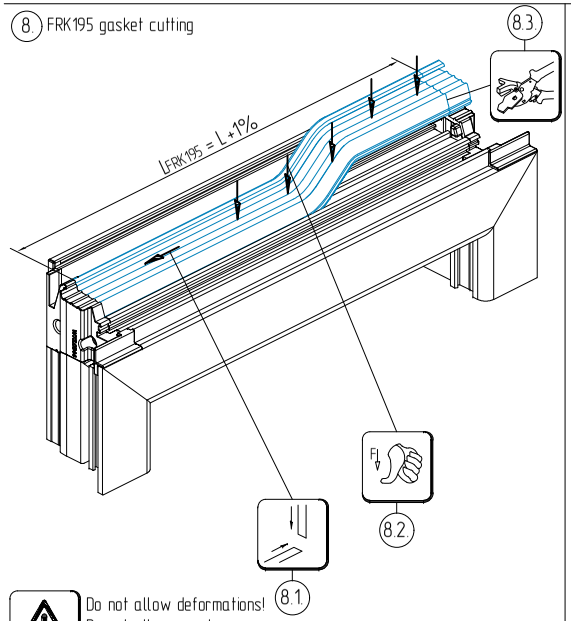

Do not allow deformations!
Do not allow gaps!
Do not stretch during installation process!

9. FRK195 gasket installation

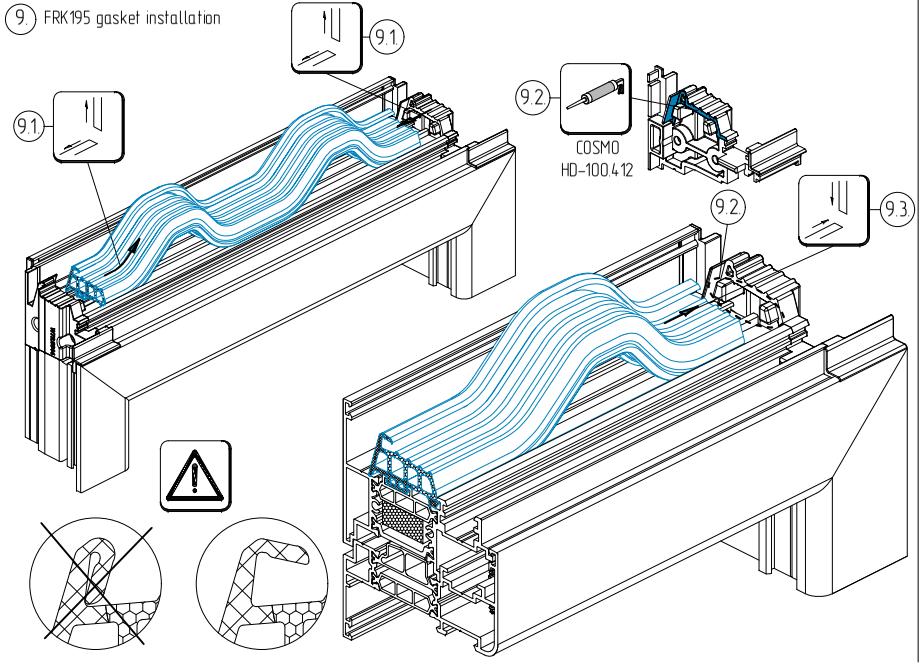

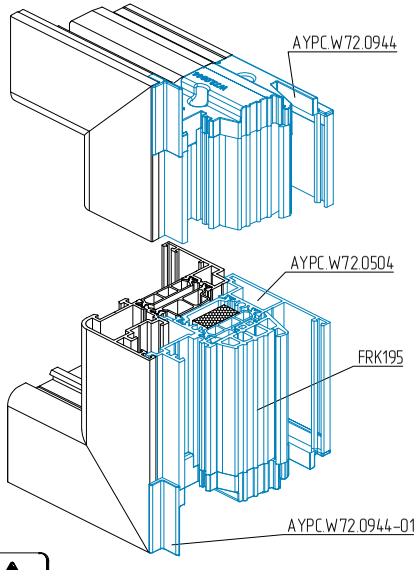

Install double casement profile after hardware installation and before sash infill unit installation

Options for double casement kits

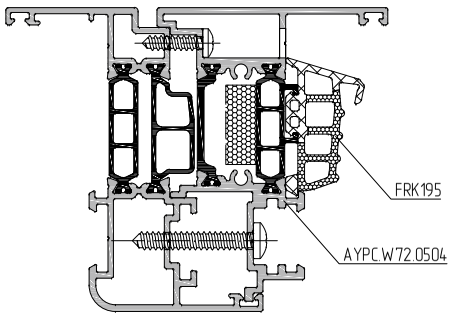

Double casement profile	Central gasket	Double casement plug	Roto double casement kits				Stublina double casement kits		
			ST-R	ST-K	ST, option 1	ST, option 2	4001.00	4005.00	4005.03
AYPC.W72.0504	FRK195	AYPC.W72.0944 AYPC.W72.0944-01	+	+	+	+	+	+	+

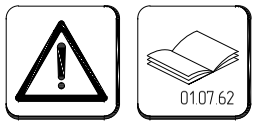

When using ST double casement kits (in two options) together with 4005.00/4005.03, machining of rod profile is required for further double casement profile fixation

Double casement kits Roto

ST-R

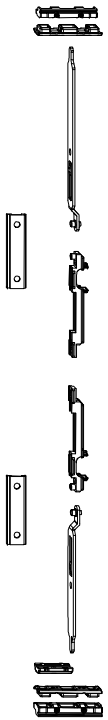

ST-K

ST (option 1)

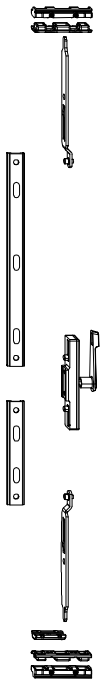

ST (option 2)

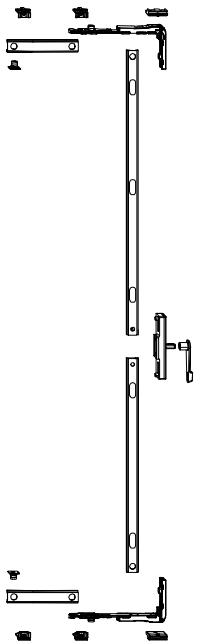

Stublina double casement kits

4001.00

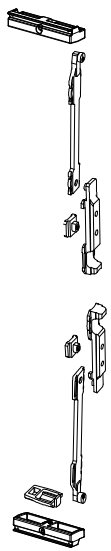

4005.00

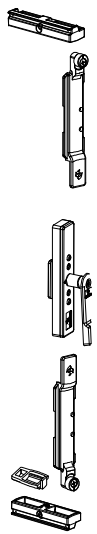

4005.03

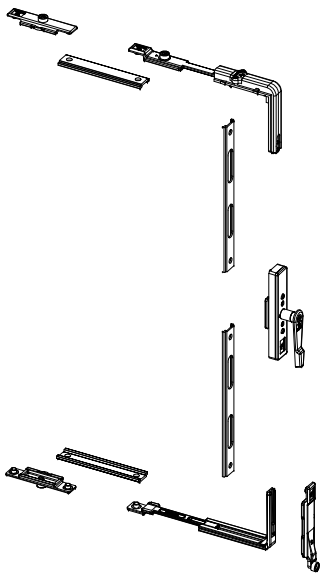

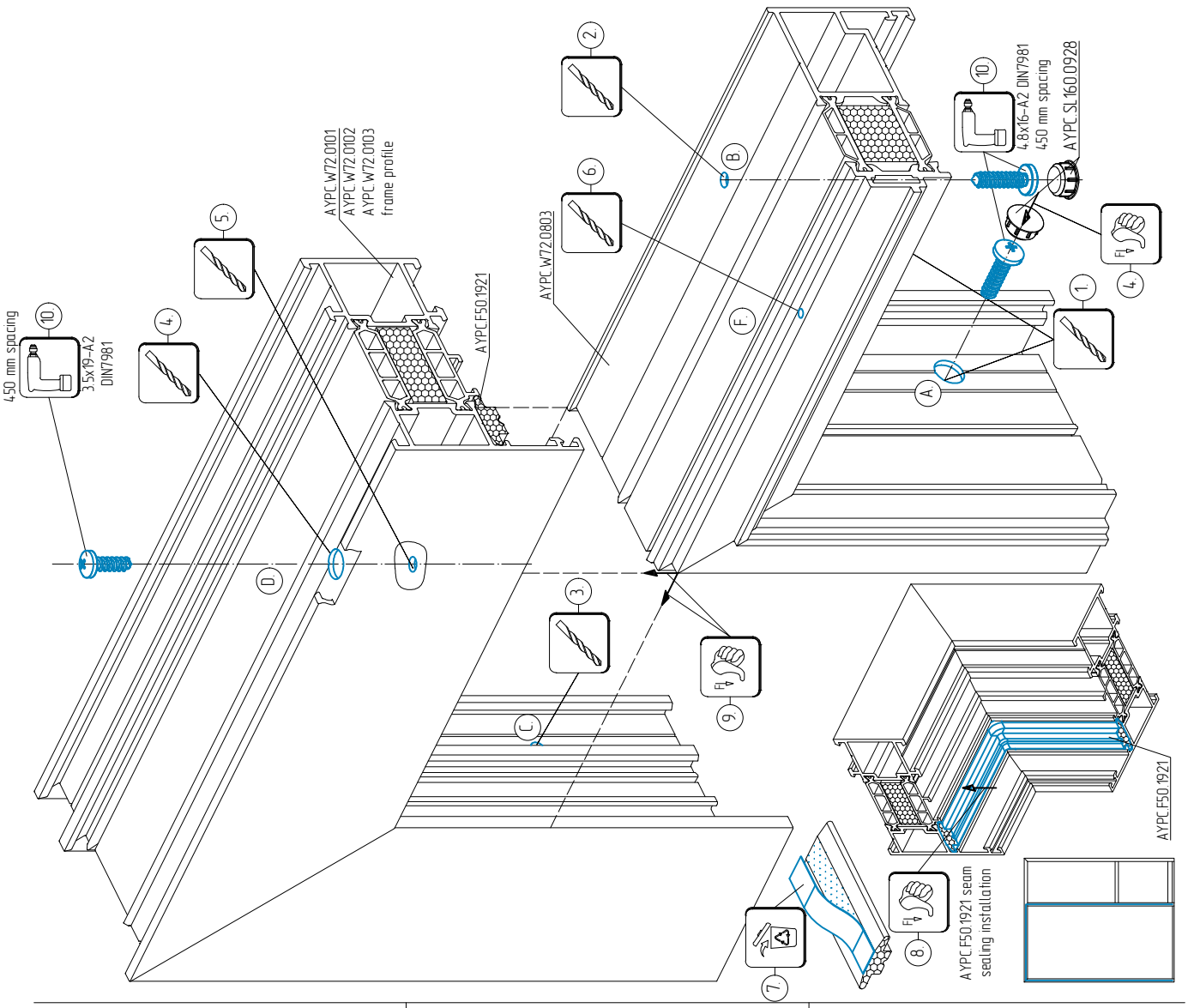

Machining and assembly of profiles with outward opening door

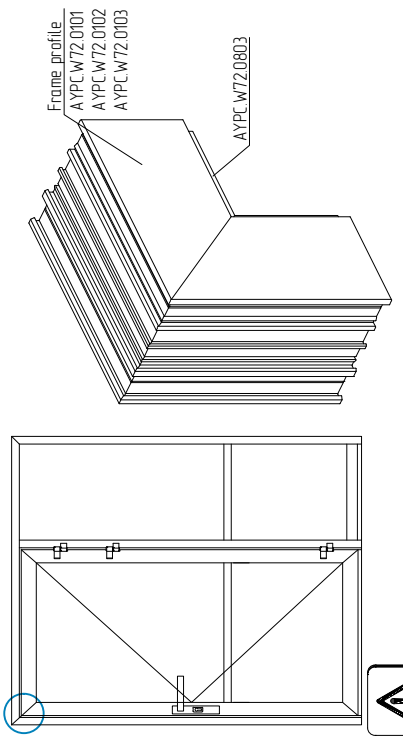

Do not use AYPC W72 0101 and AYPC W72 0301 profiles for face fixed hinge installation

Frame profile and AYPC W72 0803 profile machining for self-tapping screw installation

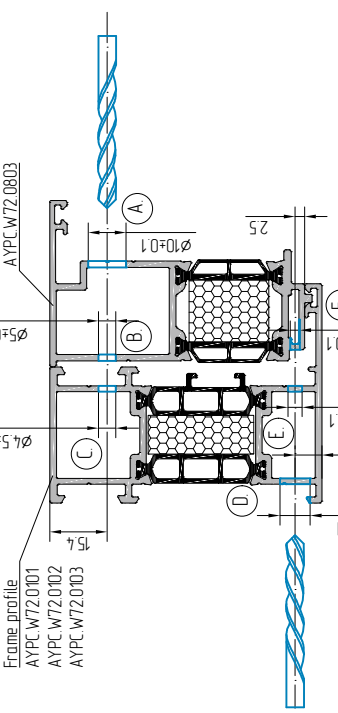

Installation of self-tapping screws for frame and AYPC W72 0803 profile connection

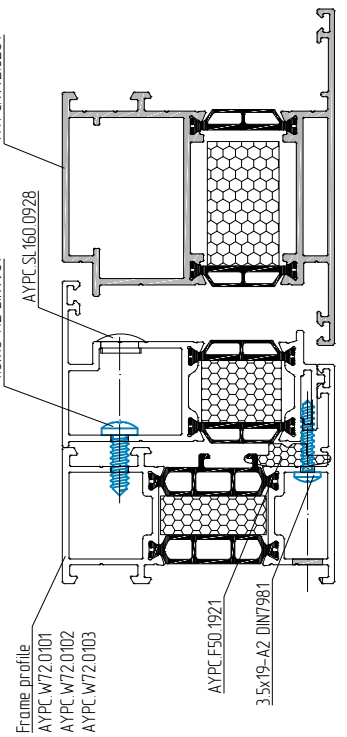

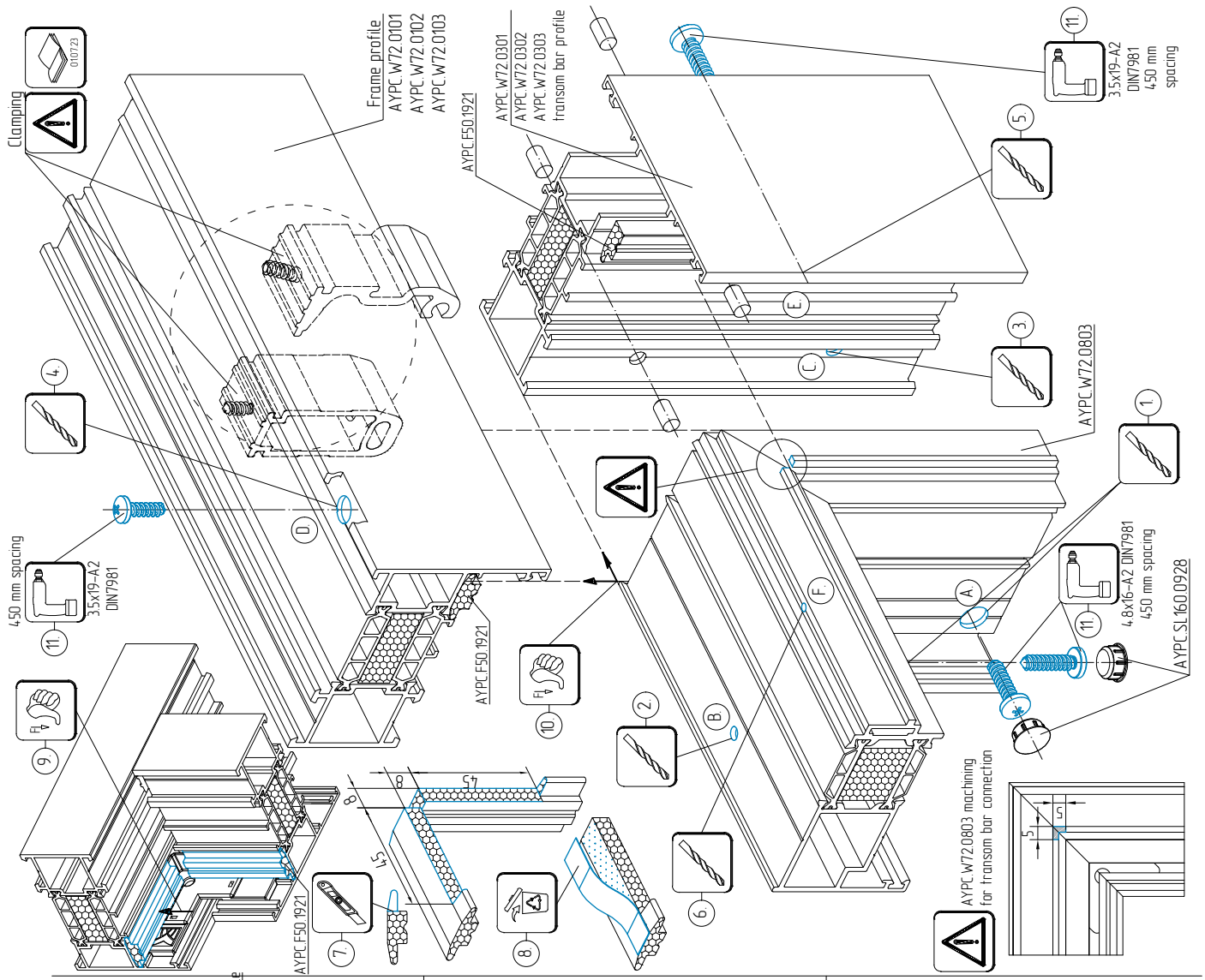

Machining and assembly of profiles with outward opening door

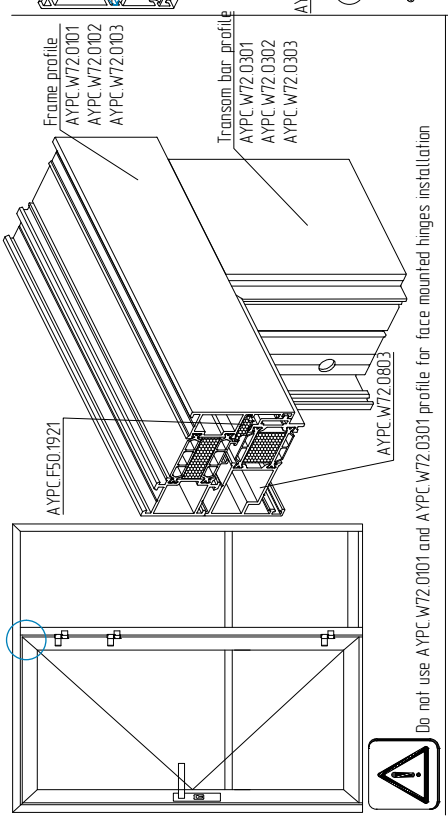

Do not use AYPC.W72.0101 and AYPC.W72.0301 profile for face mounted hinges installation

Transom bar profile and AYPC.W72.0803 machining for self-tapping screws installation

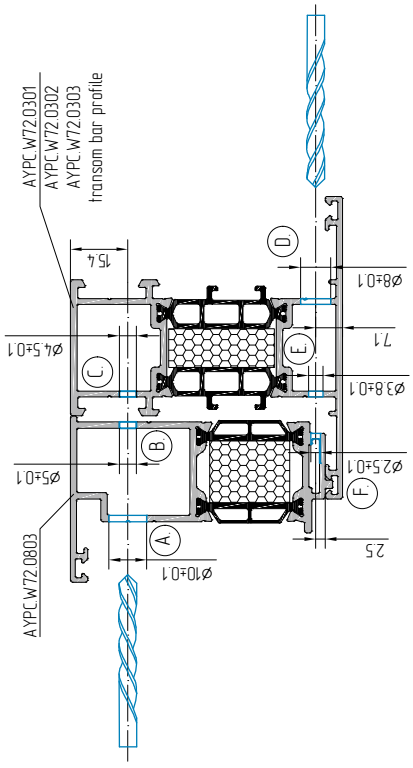

Installation scheme of self-tapping screws for transom bar profile and AYPC.W72.0803 connection

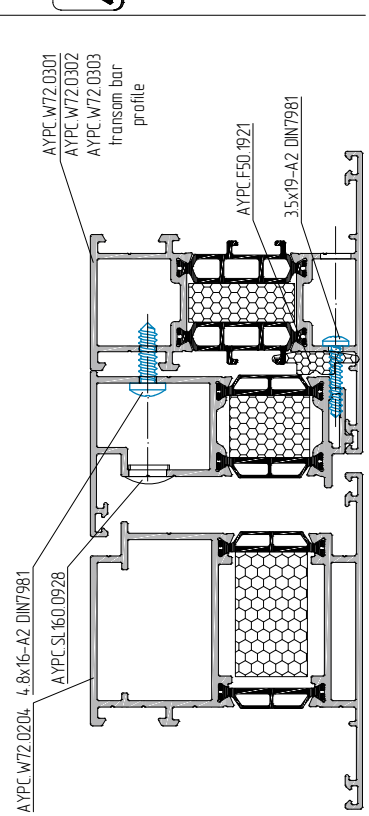

Machining and assembly of bay windows

1a. Machining of drain and ventilation holes in profiles. Visible drainage system

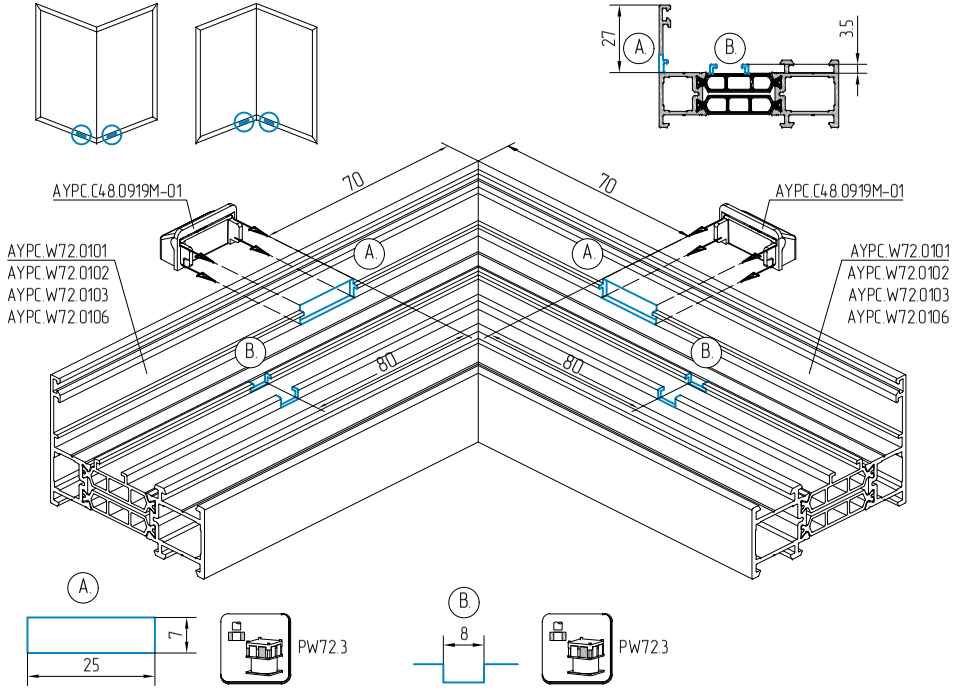

1b. Machining of drainage and ventilation holes in profiles. Concealed drainage system

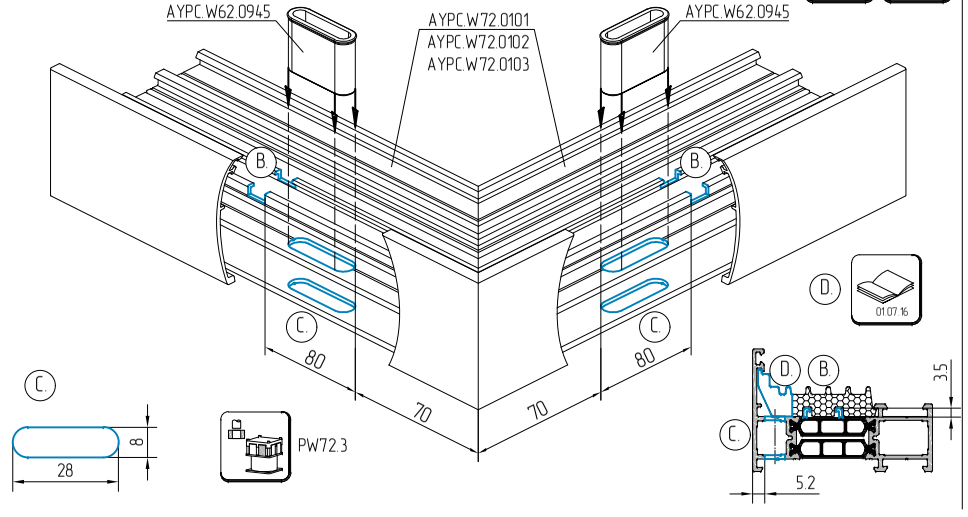

2. Outer gasket installation

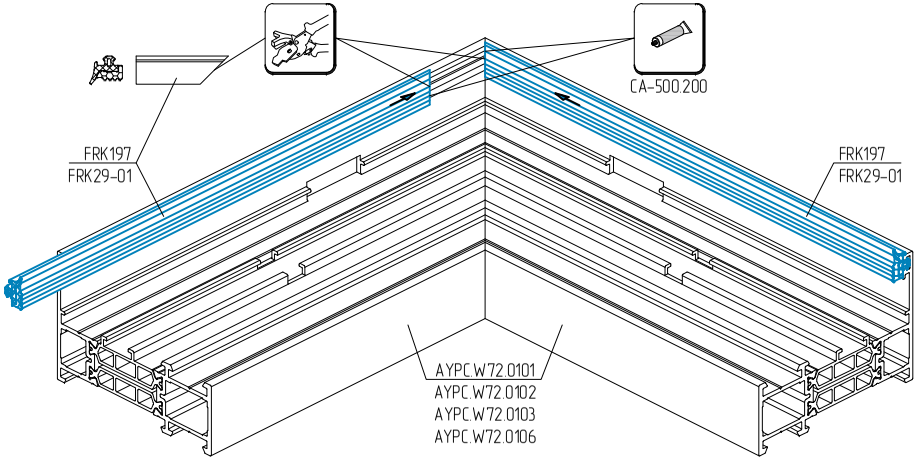

3. Bearing support installation

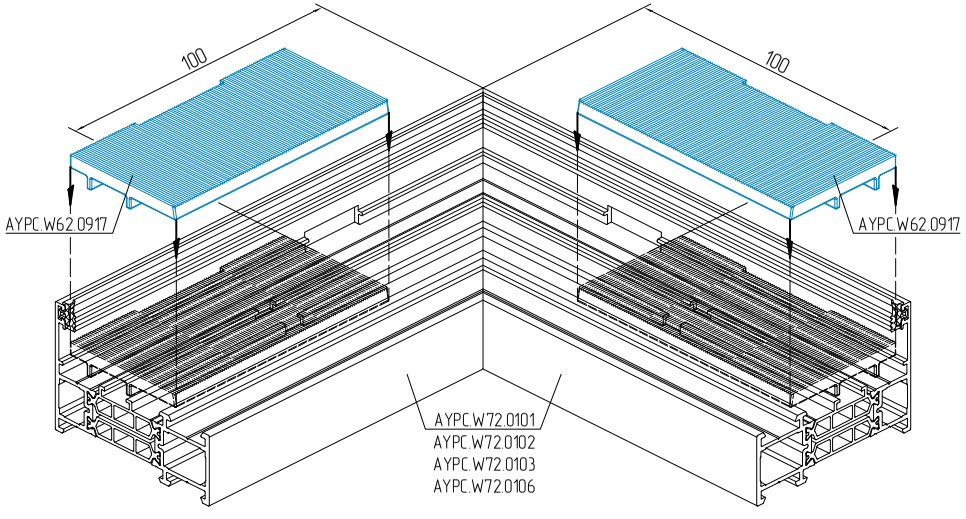

4 AYPC.W72.0911 seam sealing installation

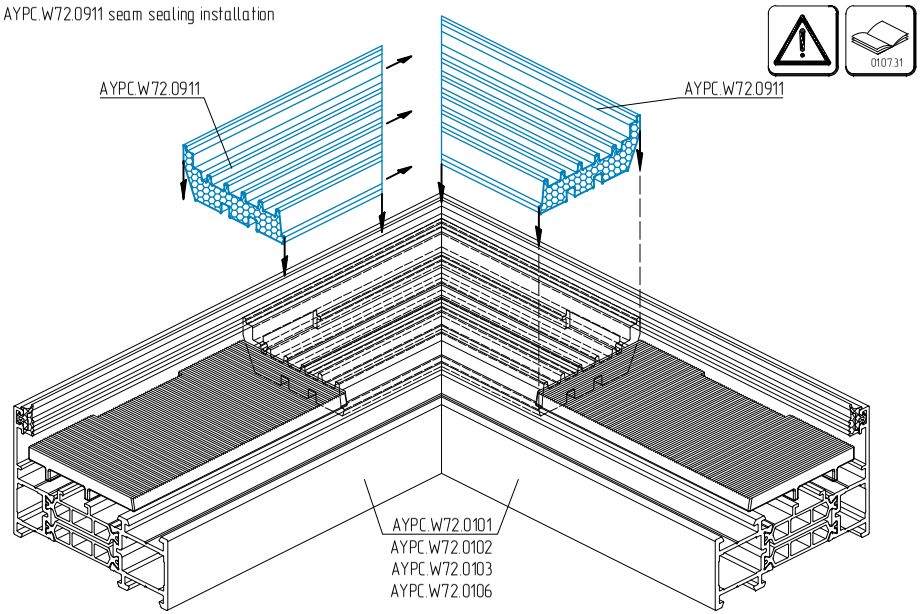

5 Infill unit installation and sealing of the joint

Manufacturer	Primary sealant	Secondary sealant	Weatherproof sealant
Dow Corning	Polyisobutylene	DC 3362 DC 3362 HD	DC 791
Sica	Polyisobutylene	Sicasil IG-25 Sicasil IG-25HM	Sicasil WS-305 Sicasil WS-605 S
General Electric	Polyisobutylene	IGS3763 IGS3703E	SCS2000E Silpruf SCS9100 Silpruf F
Kömmerling	Polyisobutylene	GD 920	GD 826 N

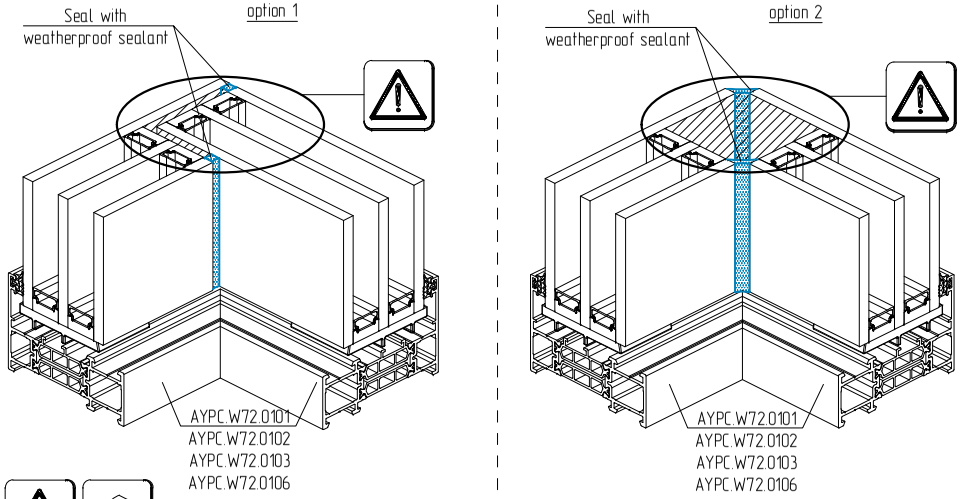

Structural corner is available.
Installation of the structural corner must be agreed with the glass and sealant suppliers

6 Installation of horizontal glass beads

6.1

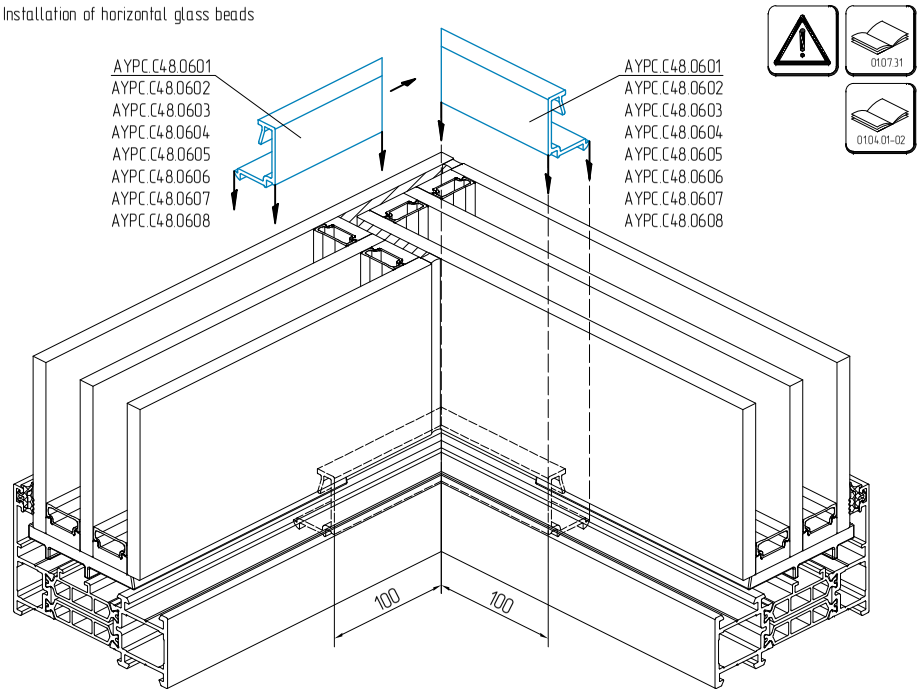

6.2

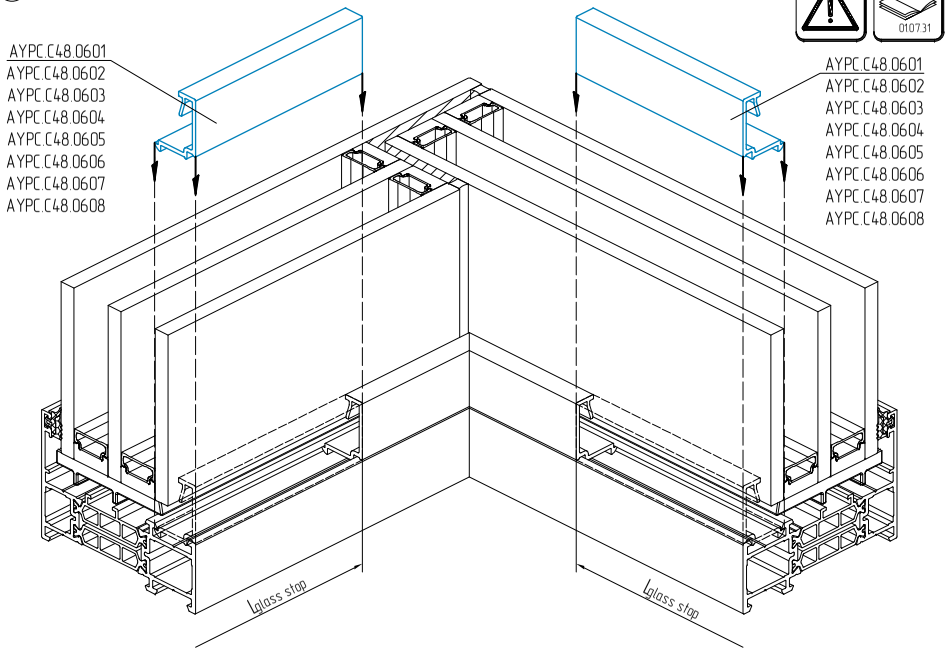

7. Installation of the glass bead gasket

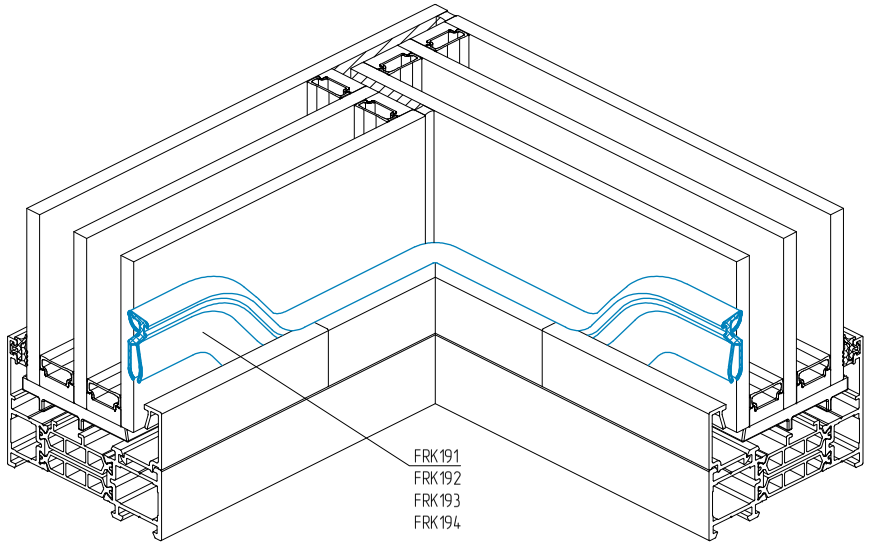

8. Sealing

Skip step 8 for the option 1

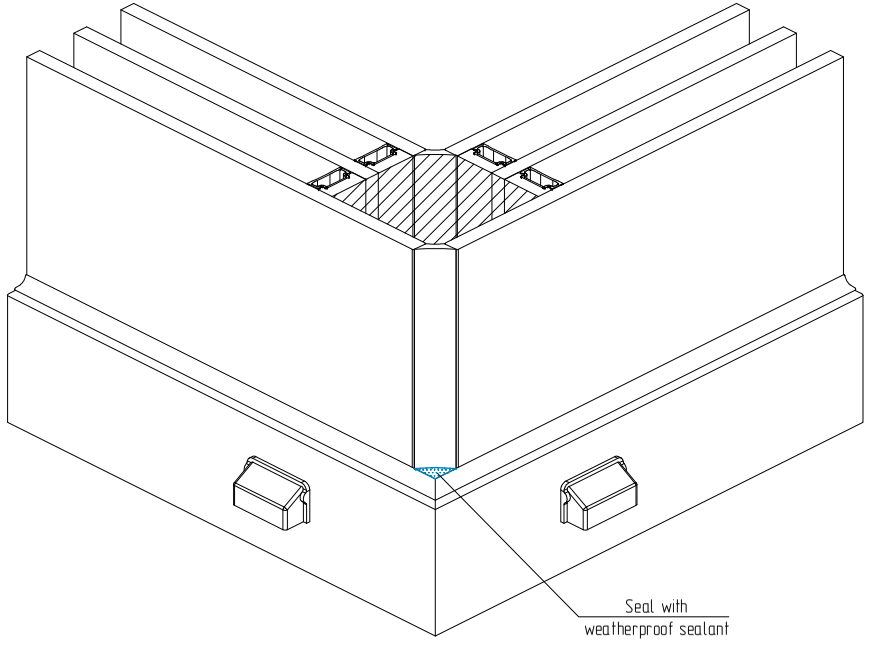

option 1

Options

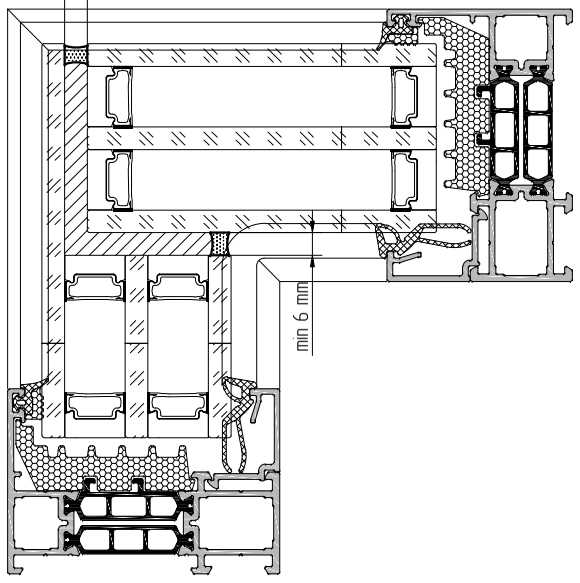

Option 2

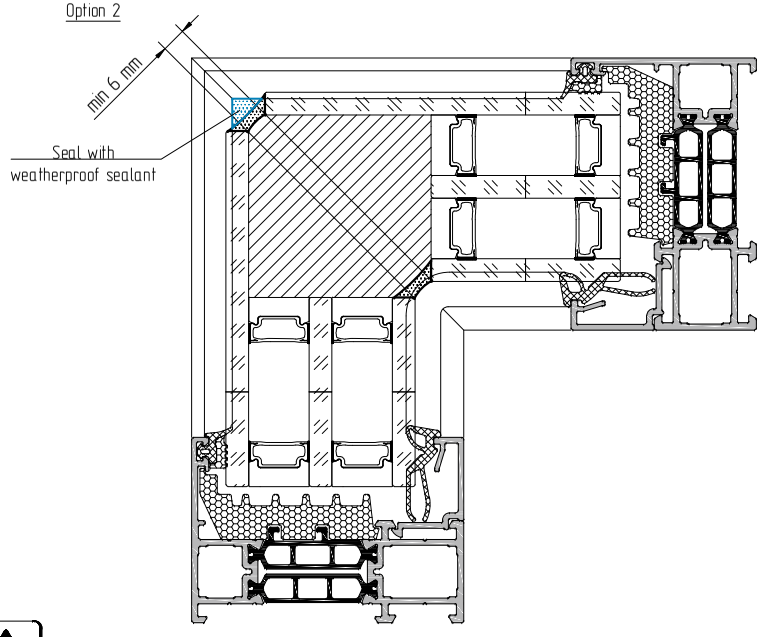

Installation of the structural corner must be agreed with the glass and sealant suppliers

Mounting plate installation

AYPC.W62.0940

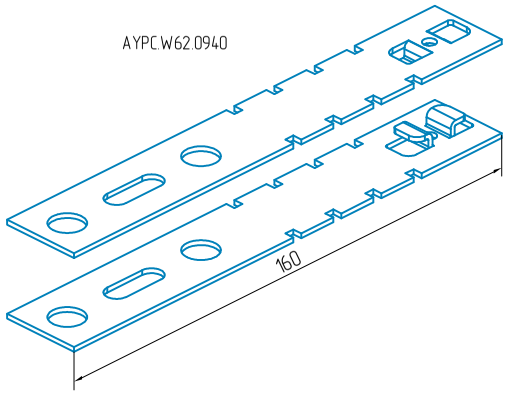

AYPC.W62.0940-01

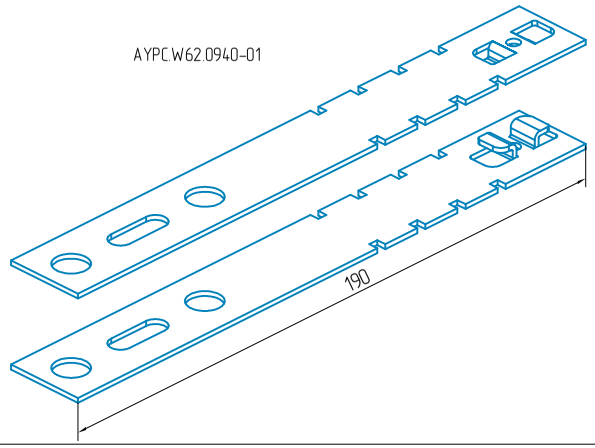

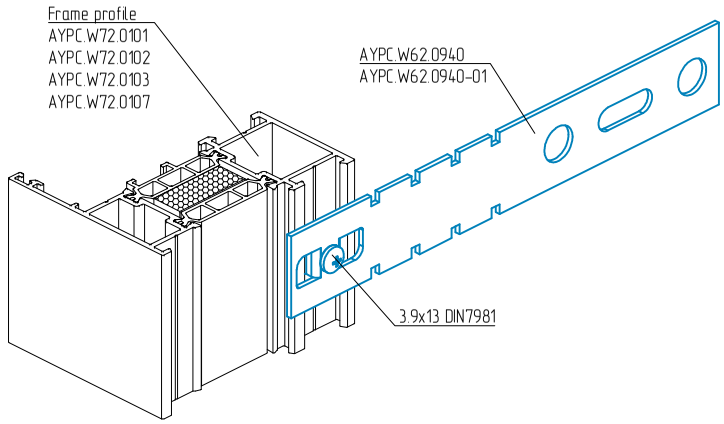

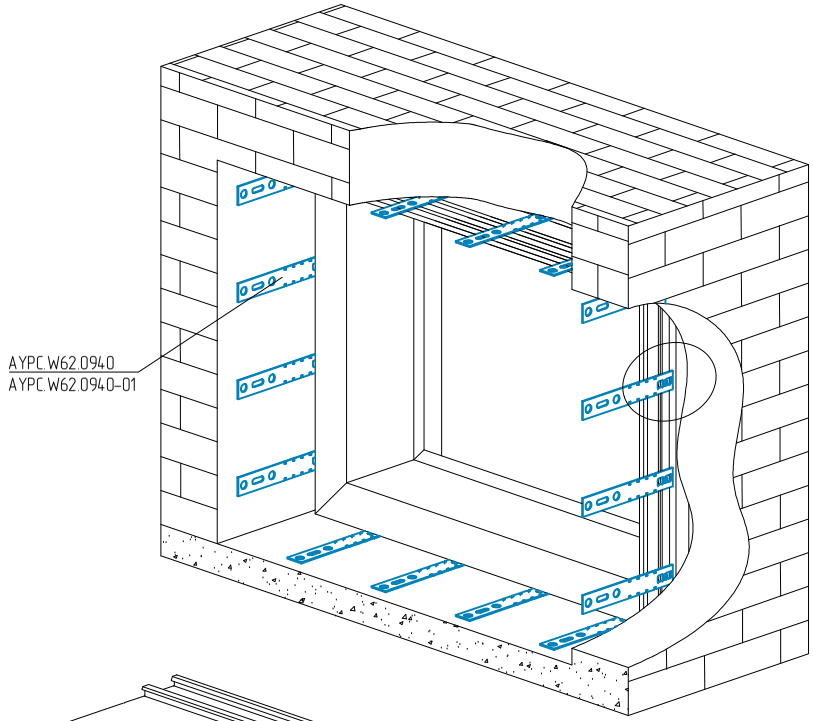

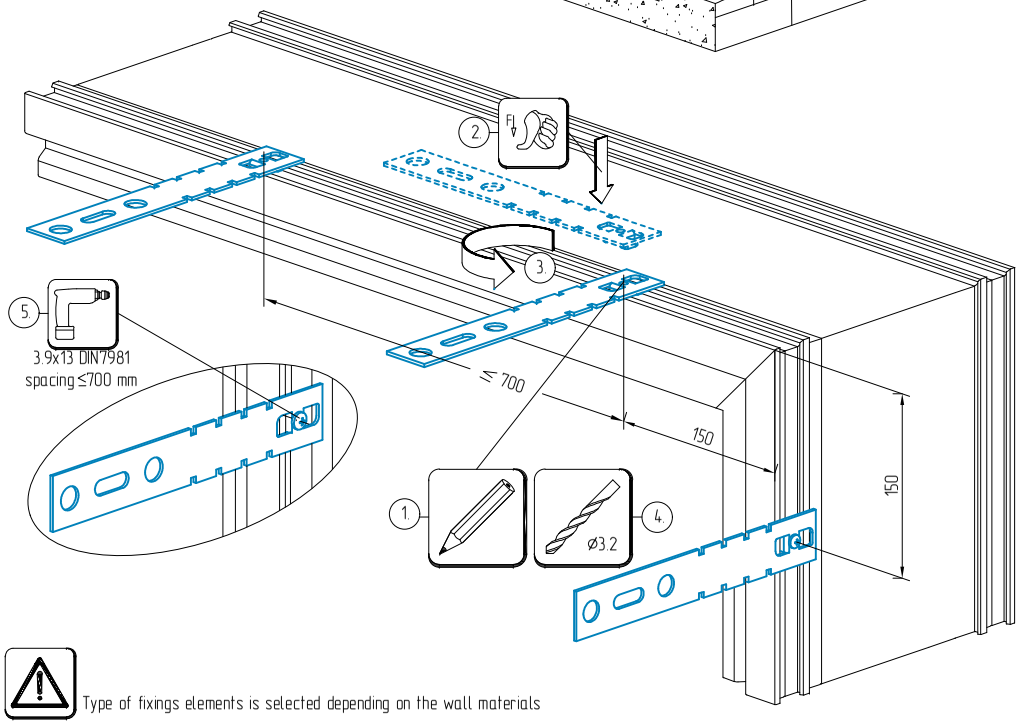

Type of fixings elements is selected depending on the wall materials

Cutting of the groove edges for hardware installation

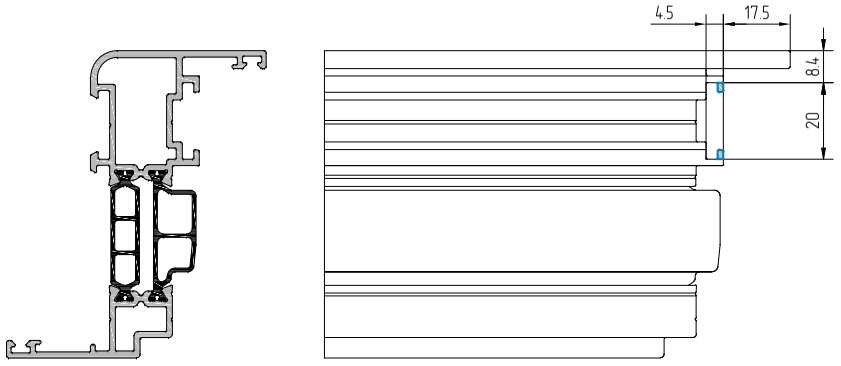

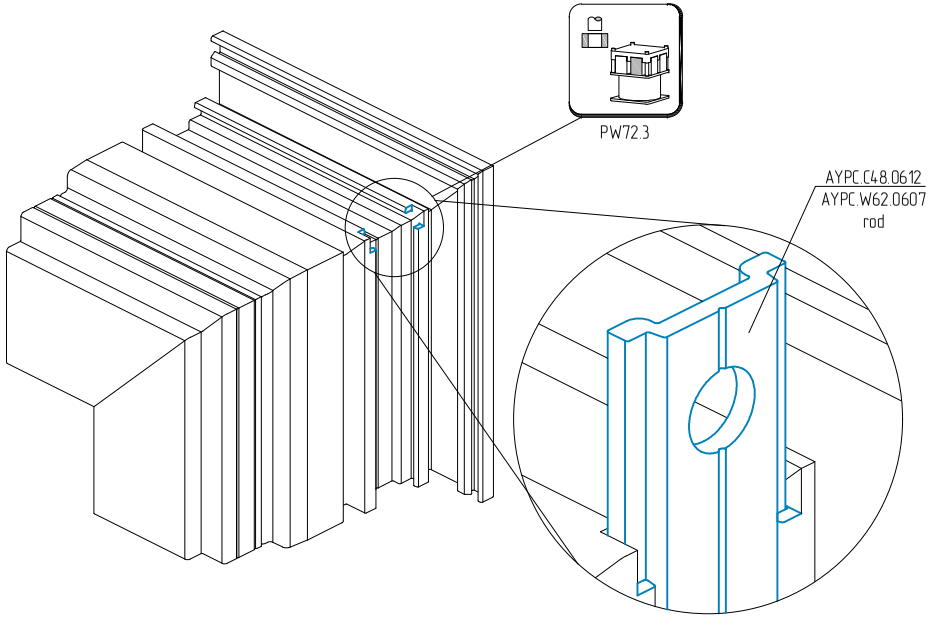

Machining of AYPC.C48.0612 rod profile for Stublina hardware installation

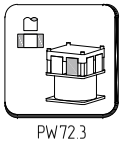

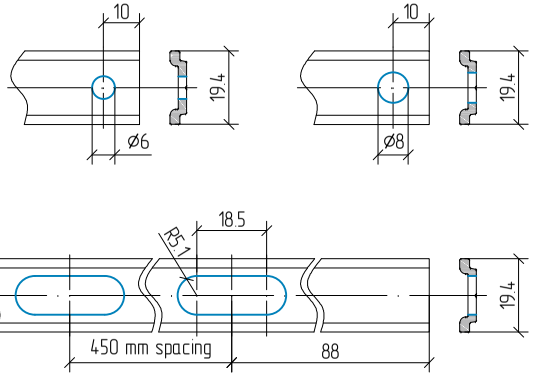

Use manufacturer instructions while rod profile machining

Machining of AYPC.W62.0607 rod profile for Roto hardware installation

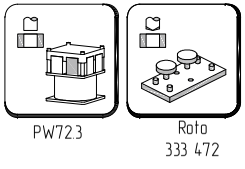

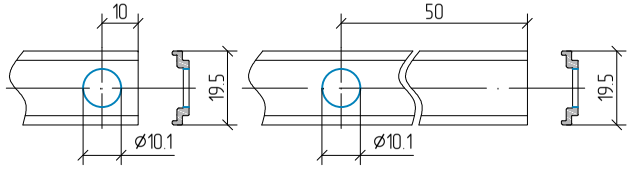

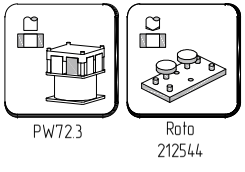

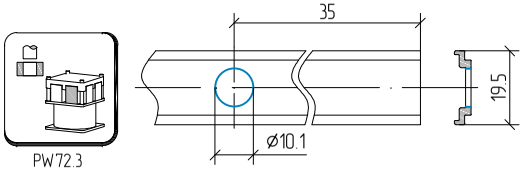

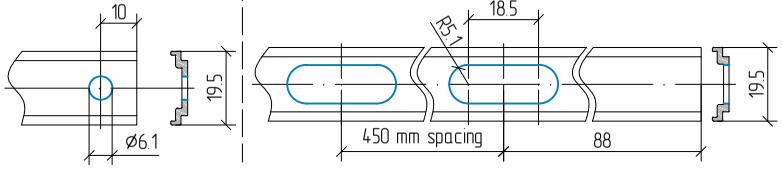

Use manufacturer instructions while rod profile machining

Fork handle installation

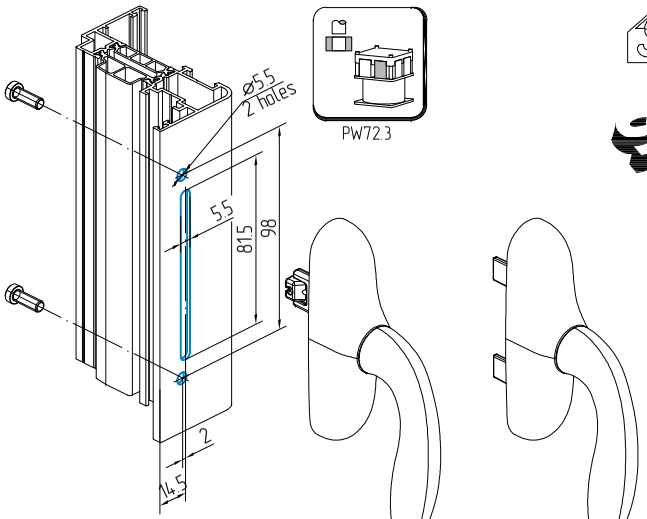

Use hardware suppliers instructions while hardware installation

Art. 377900 Roto Line spindle handle

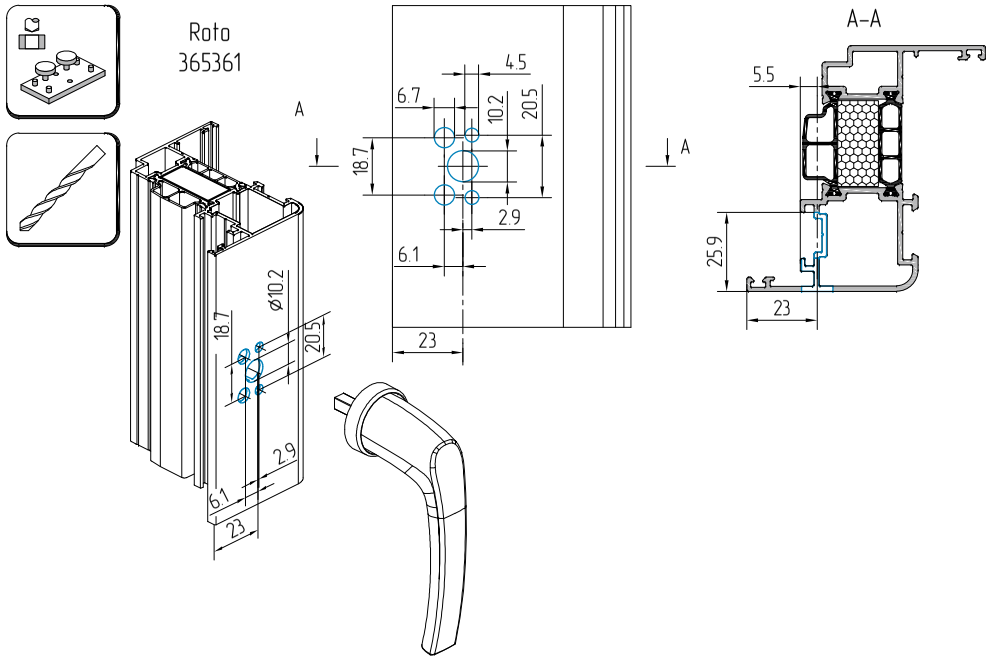

Roto 378338 installation

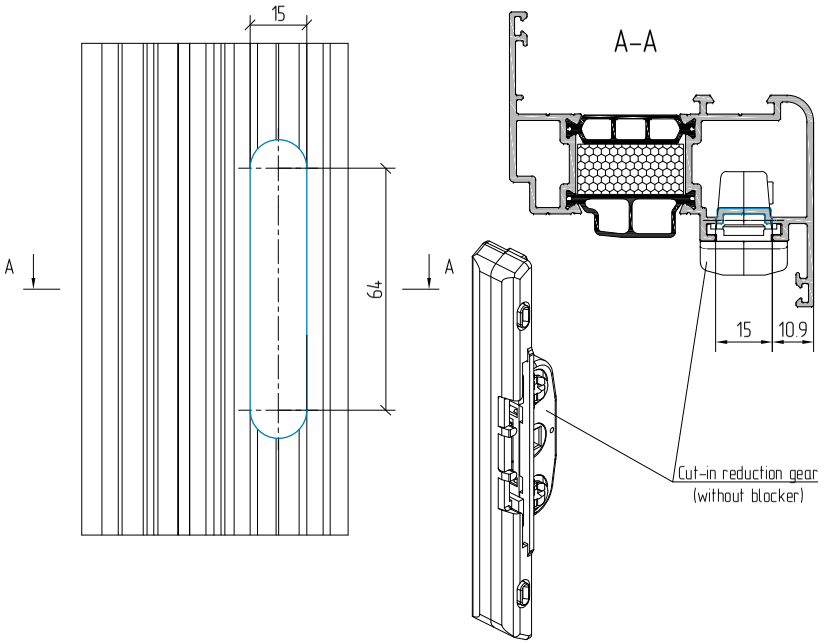

Roto Samba/Swing window handle installation

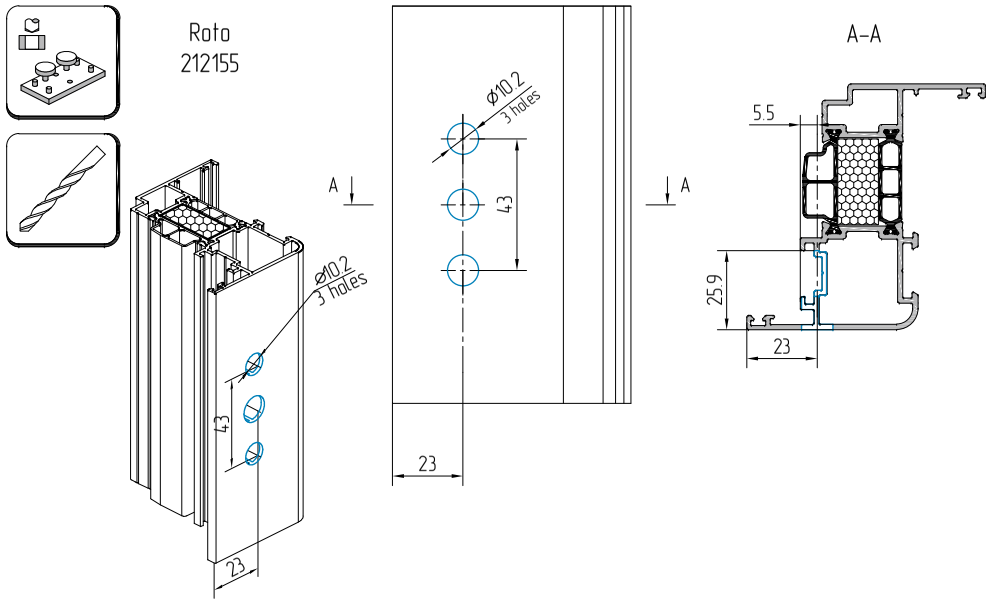

AYPC.W72.0102 frame profile machining for hinge (upper compass arm) installation in the windows with PVC hardware groove

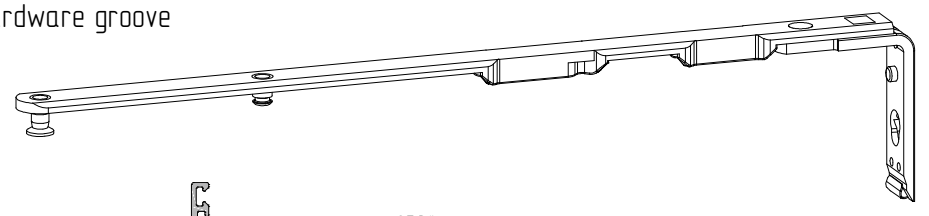

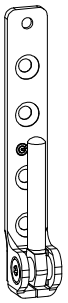

Bottom part of the hinge

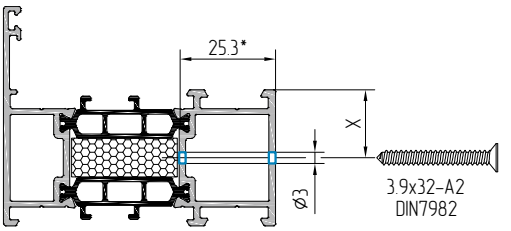

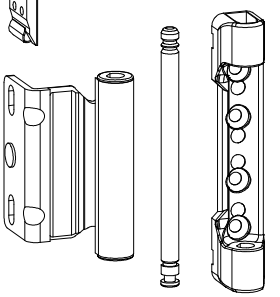

Upper hinge and compass

Machining for GU UNI-JET D installation

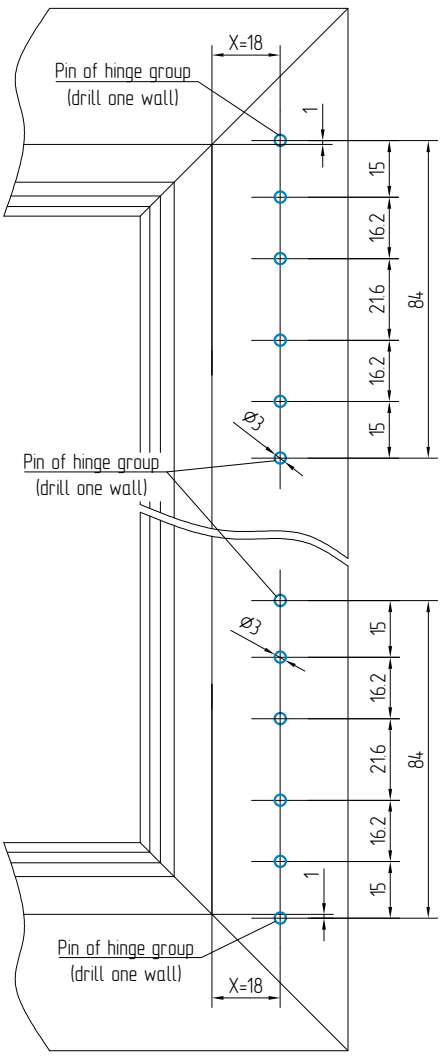

Machining for Sigenia AUBI installation

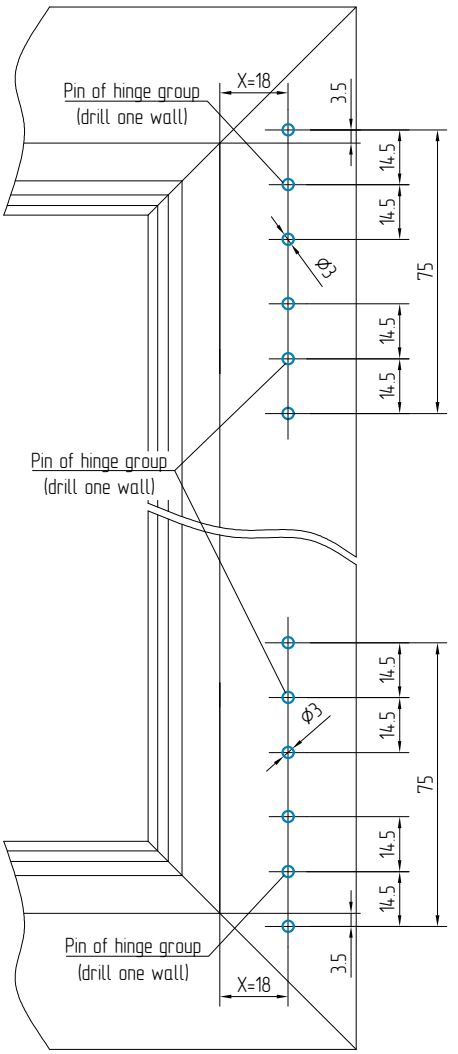

Machining for ROTO NT installation

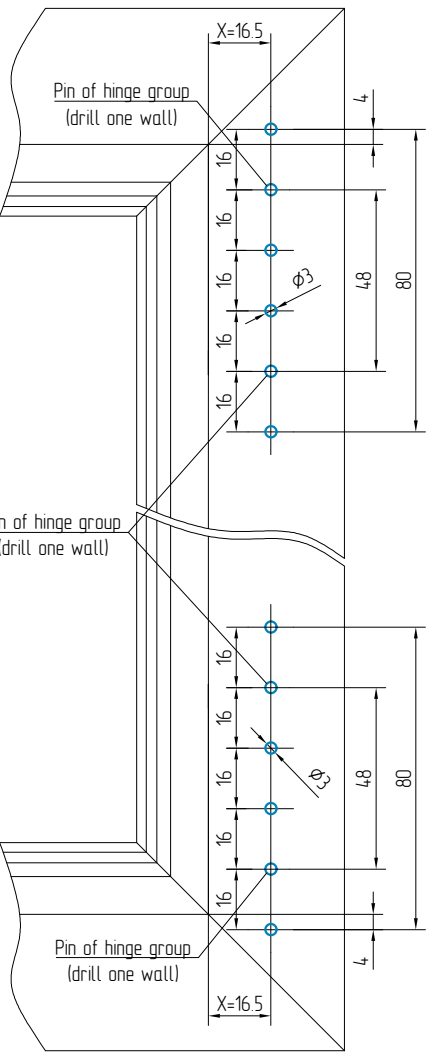

SIEGENIA

GU BKS FERCO

PVC

Roto

Drill two walls of frame profile for hinge fixation. Use templets from hardware supplier when drilling

AYPC.W72.0212 sash profile machining with PVC hardware groove

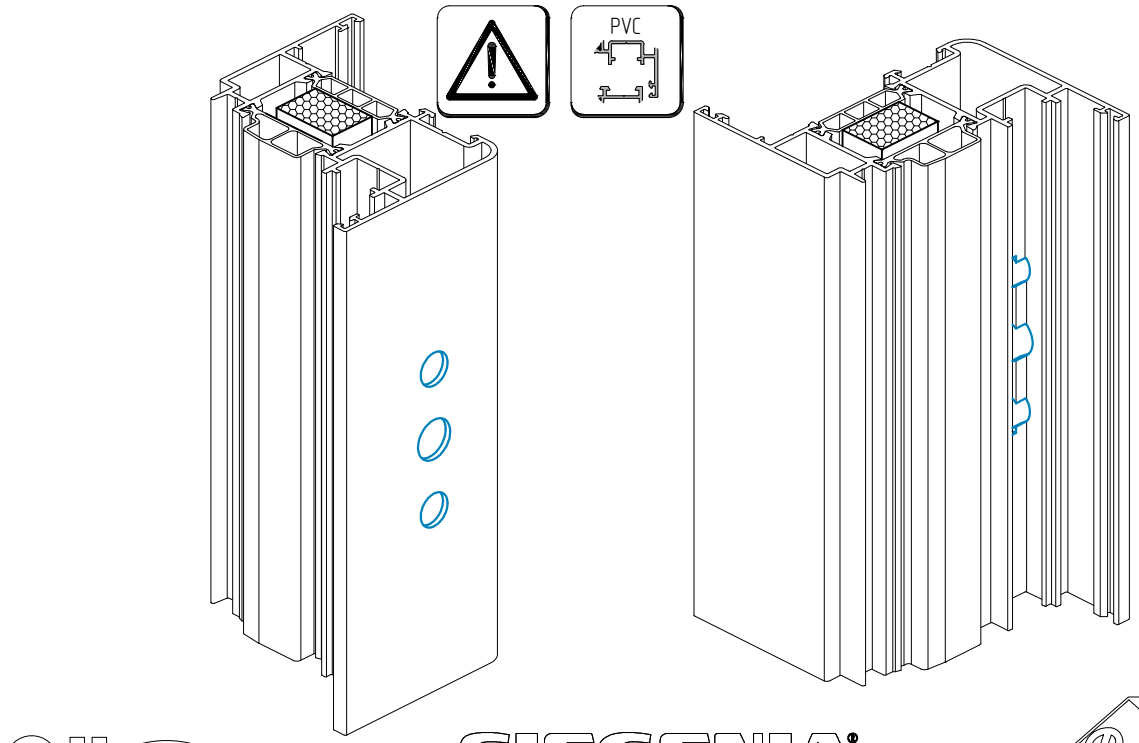

GU BKS FERCO SIEGENIA Roto

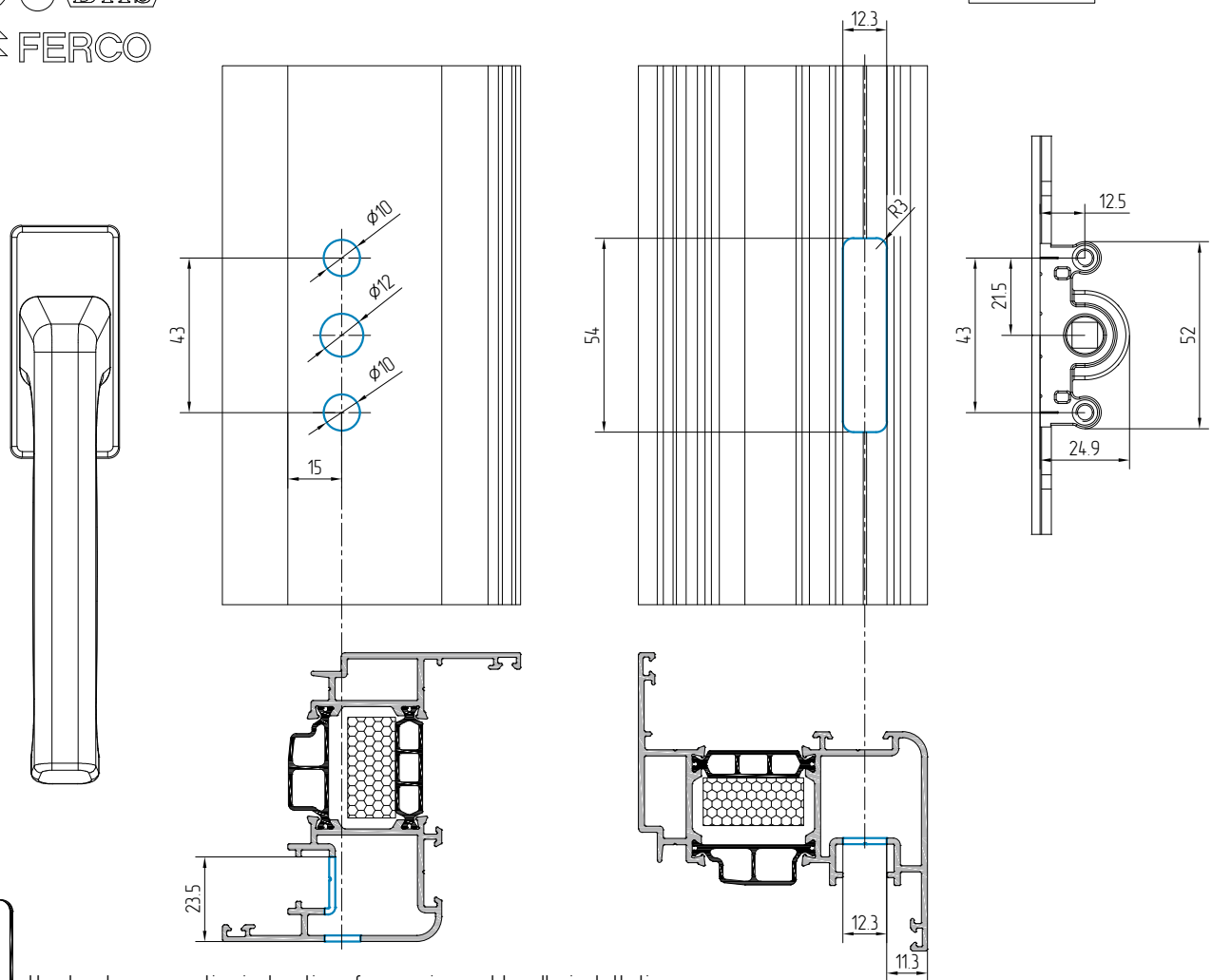

Use hardware supplier instructions for gearing and handle installation.

Roto 625432 and 625440 gearing installation into AYPC.W62.0203 (AYPC.W62.0223) sash profiles

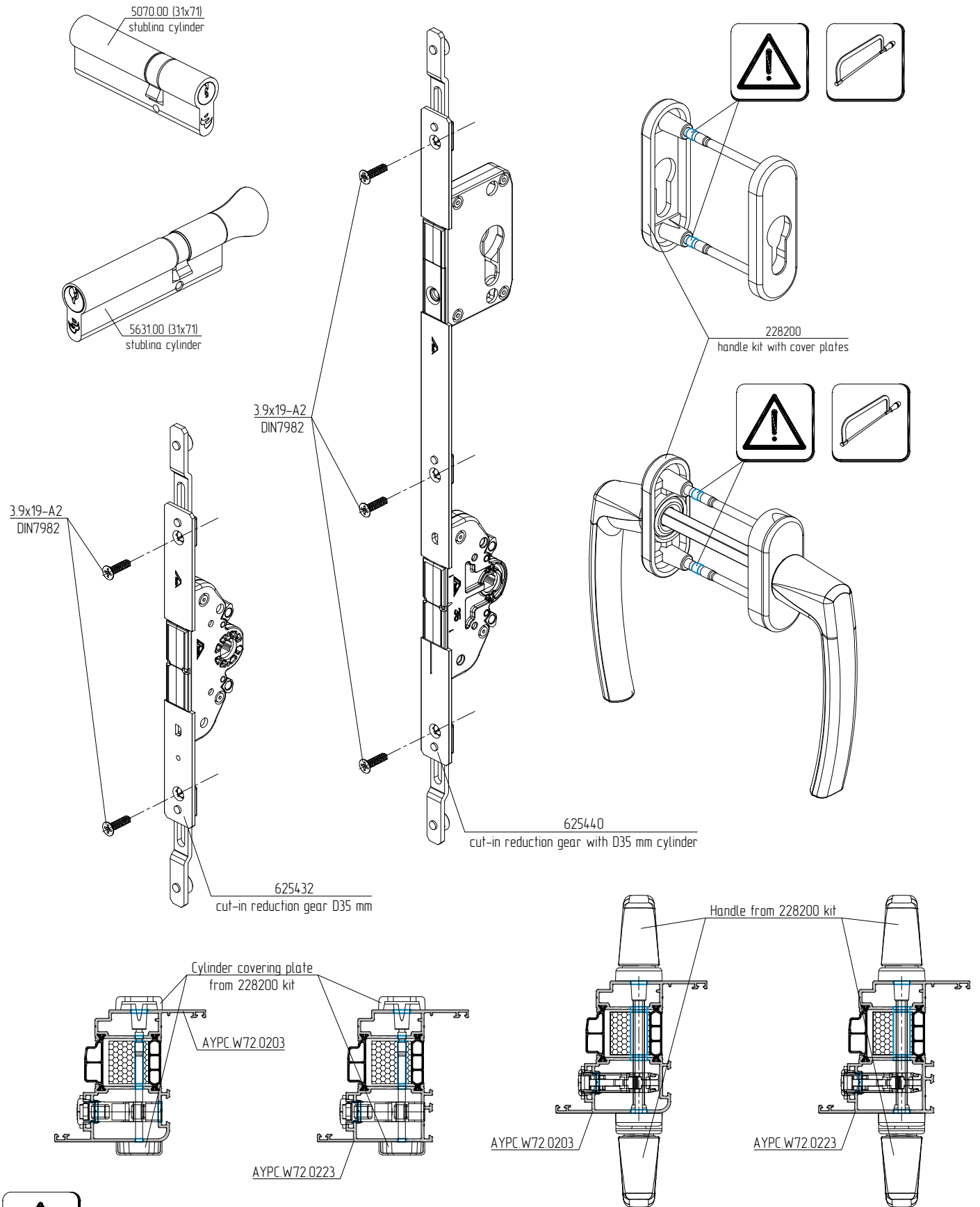

3.9x19-A2 DIN7982 self-tapping screws are not included into the delivery set.
Before assembling it is necessary to shorten handle and core part cover fixing screws down to 92 mm

AYPC.W72.0203 (AYPC.W72.0223) sash profiles machining for Roto 625432 gearing installation

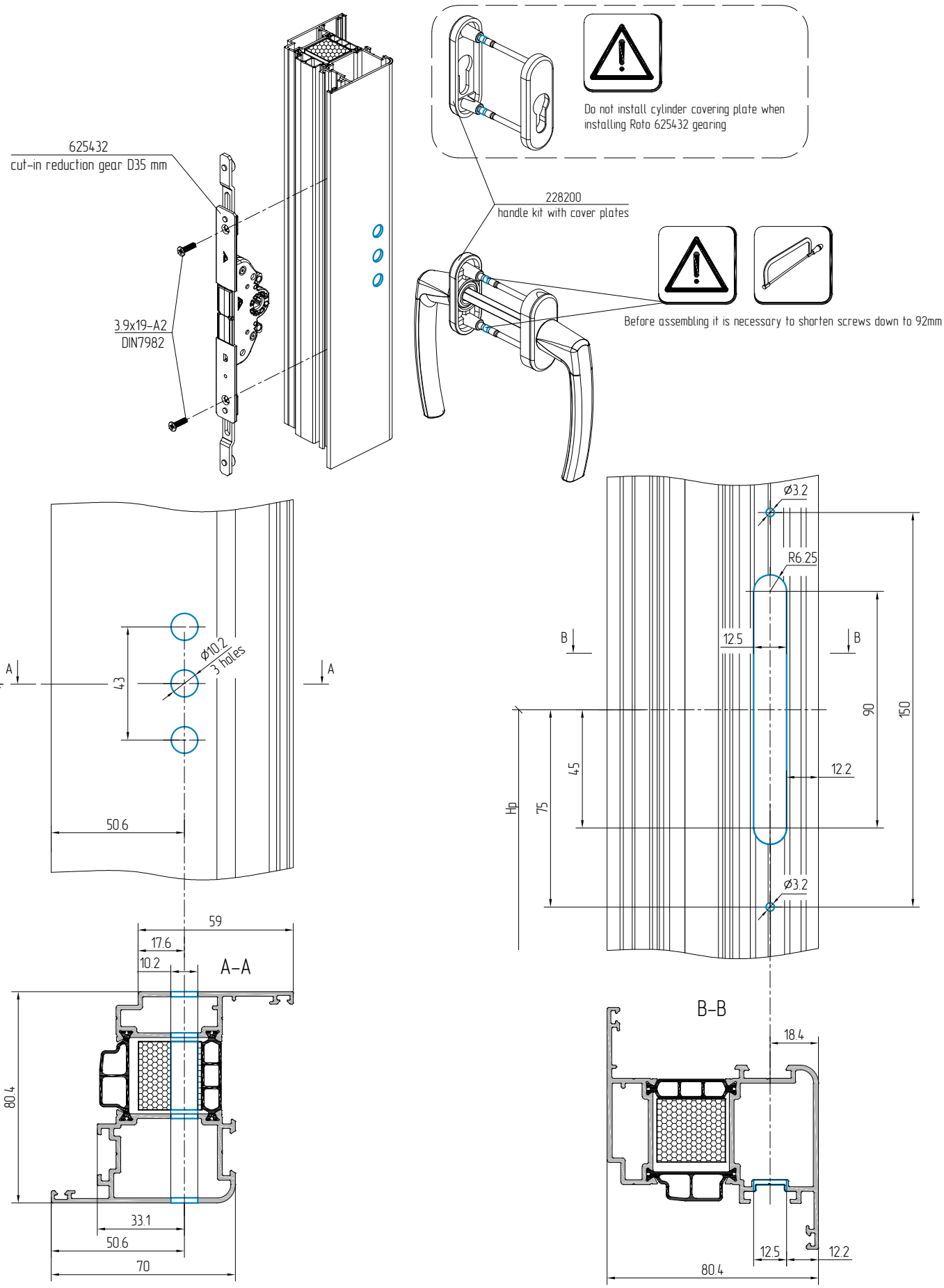

AYPC.W72.0203 (AYPC.W72.0223) sash profiles machining for Roto 625440 cylinder installation

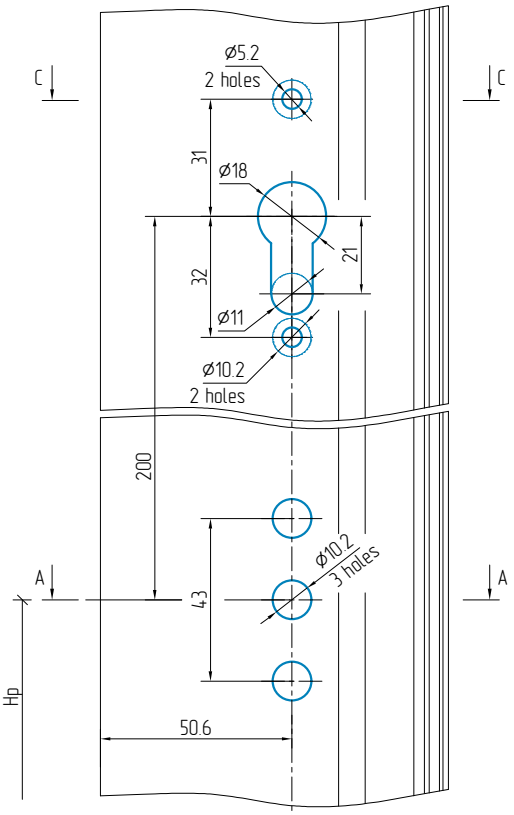

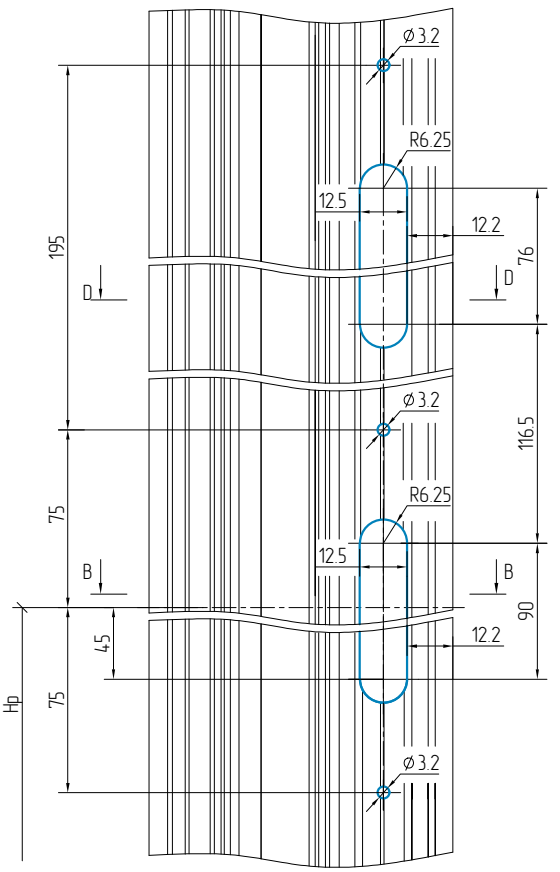

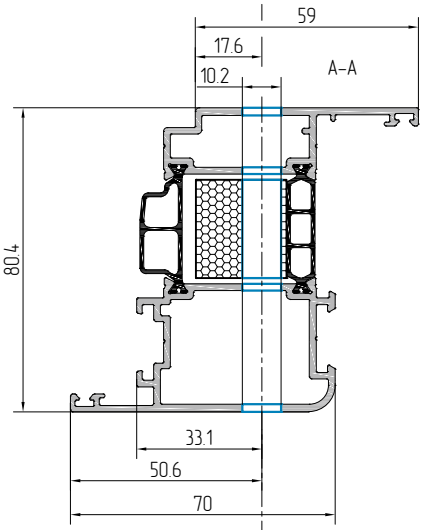

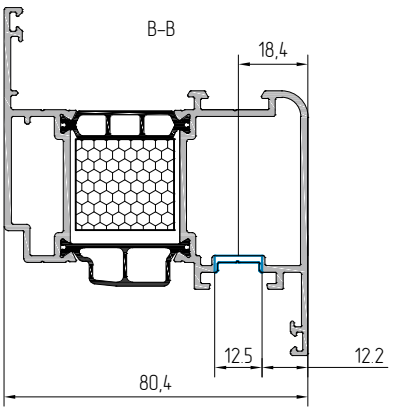

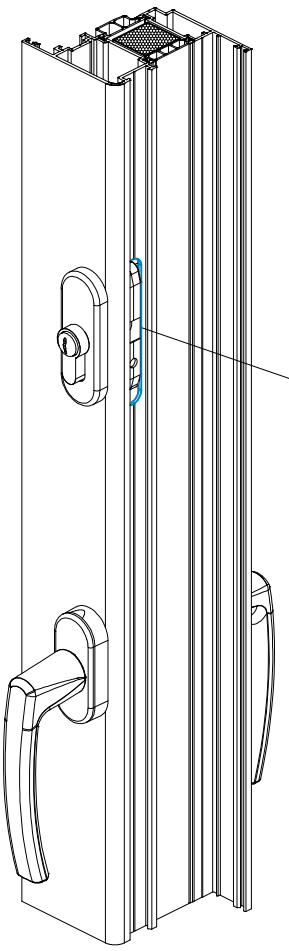

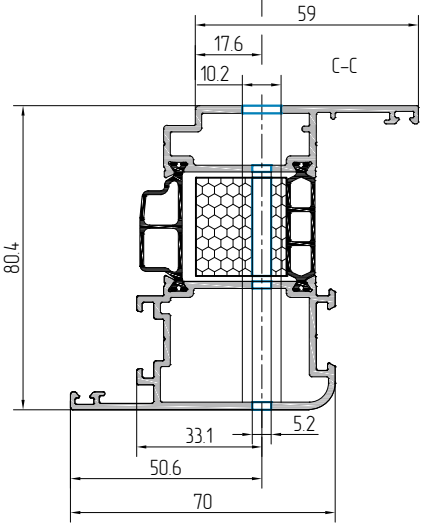

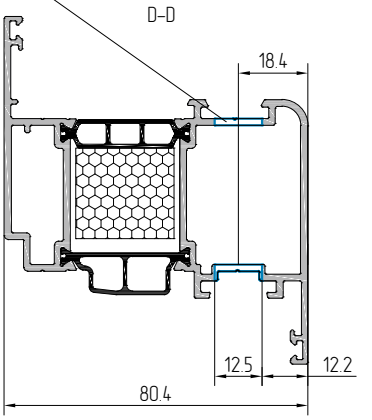

FRK98 gasket cutting for hinge installation

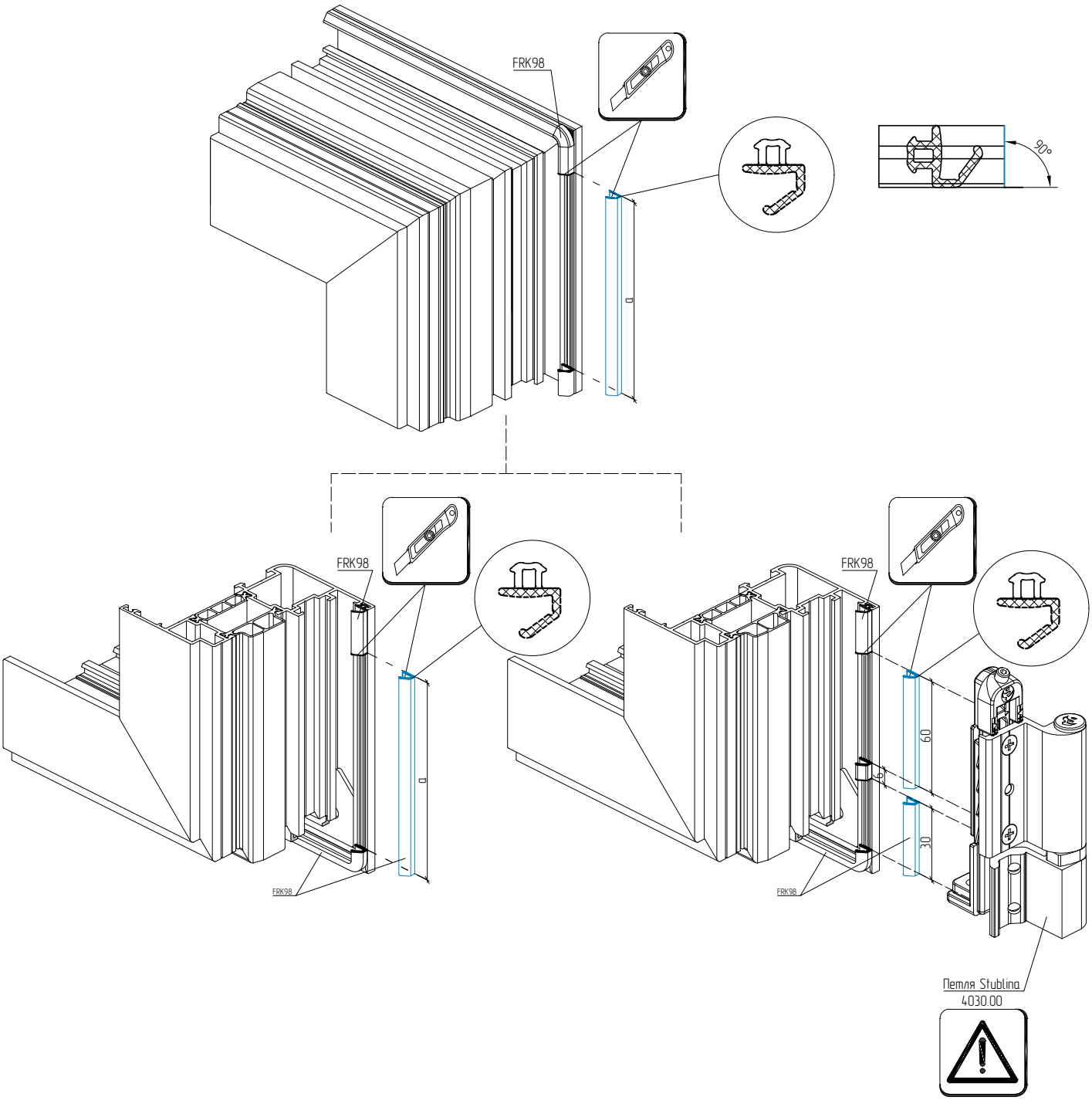

Before window hinge installation it is necessary to remove part of FRK98 gasket.
The size of removed part of FRK98 gasket depends on window opening type and hinges used

Machining of sash profiles for SLS Siegenia lock-blocker installation

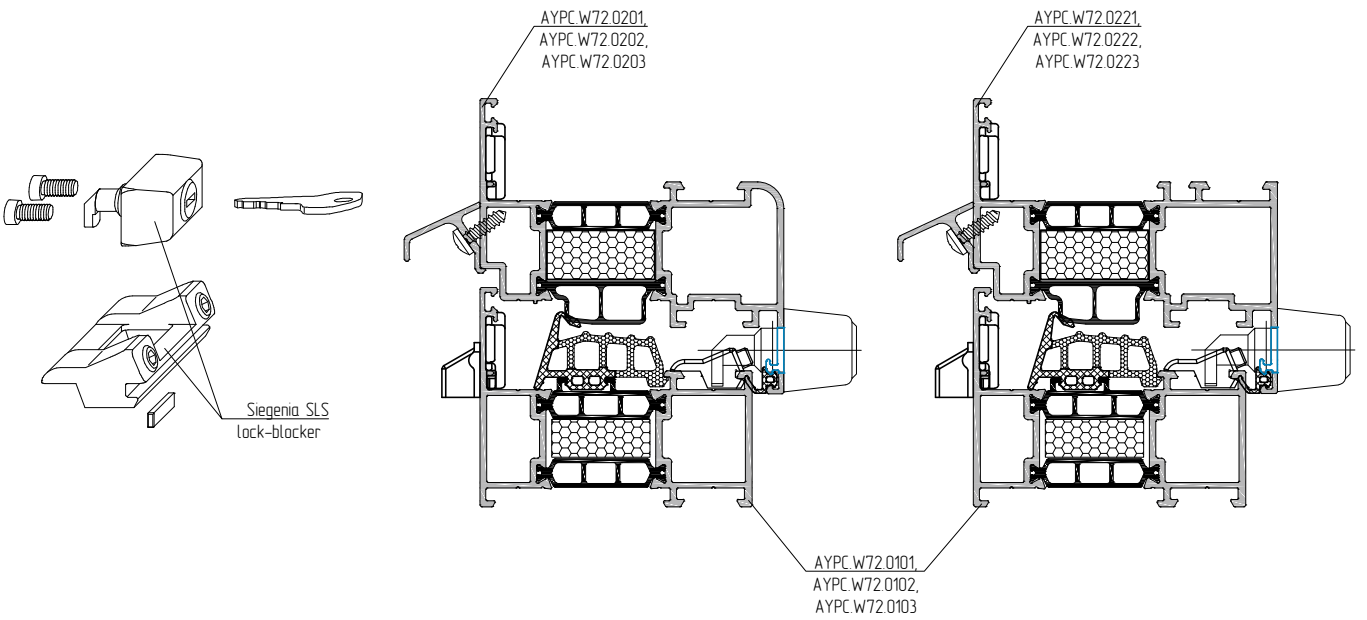

Machining of sash profiles for SLS Siegenia lock-blocker installation

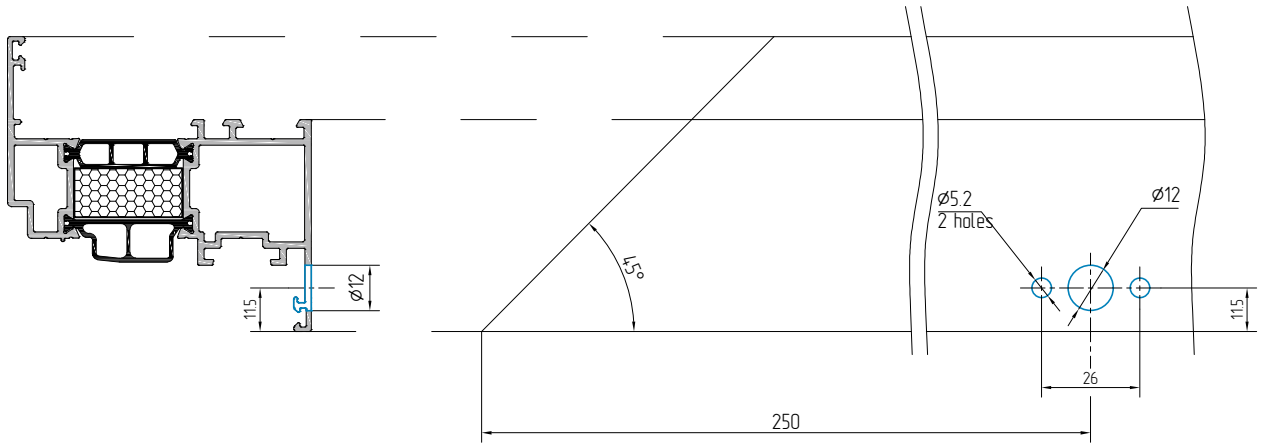

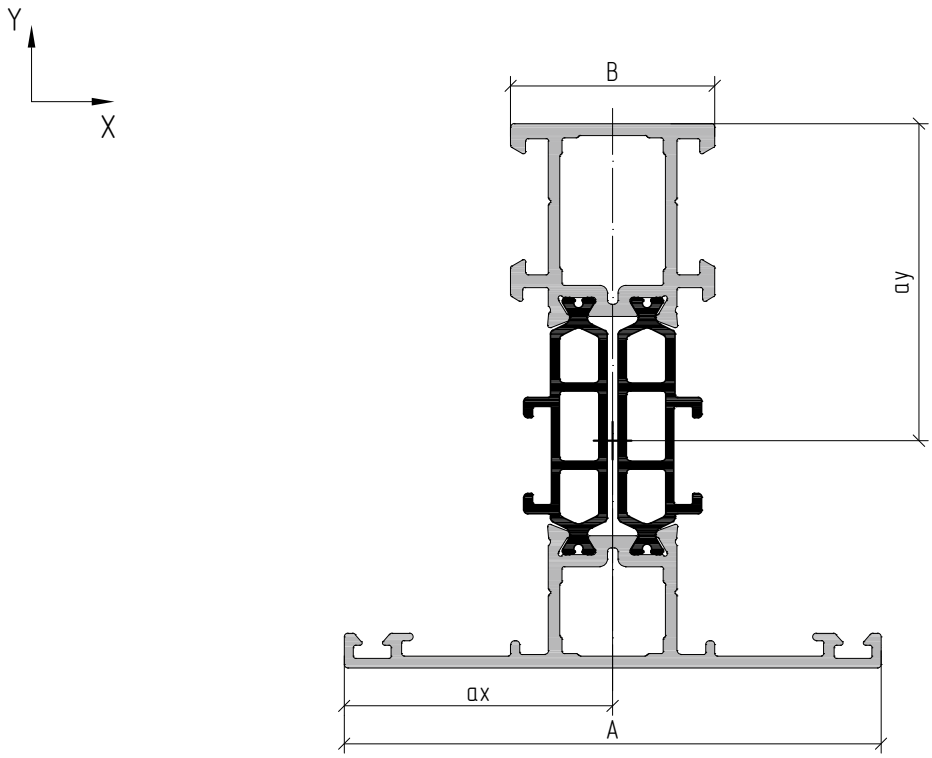

Profile	m, kg/m	S, mm^2	Jx, cm^4	Wx, cm^3	ay, mm	Jy, cm^4	Wy, cm^3	ax, mm	A, mm	B, mm
AYPC.W72.0101	1.321	602.7	21.6	5.6	38.6	4.9	1.5	32.5	49	27
AYPC.W72.0102	1.494	667.1	25.2	6.5	38.5	8.8	2.4	36.9	58	36
AYPC.W72.0103	1.815	785.9	31.6	8.3	38.2	19.2	4.4	44.0	72	50
AYPC.W72.0815	1.225	547.0	18.0	4.1	44.2	5.1	1.9	26.4	46	19
AYPC.W72.0107	2.520	1049.9	155.1	17.3	89.5	14.8	3.3	44.4	58	36
AYPC.W72.0121	1.209	547.0	17.7	4.7	37.7	2.1	1.6	13.5	27	
AYPC.W72.0122	1.384	621.9	21.3	5.8	37.1	4.9	2.7	18.0	36	
AYPC.W72.0123	1.703	740.8	27.8	7.6	36.5	13.2	5.3	25.0	50	
AYPC.W72.0301	1.443	647.9	24.7	5.9	41.9	8.5	2.4	35.5	71	27
AYPC.W72.0302	1.616	712.2	28.4	6.9	41.4	13.7	3.4	40.0	80	36
AYPC.W72.0303	1.937	831.1	34.9	8.6	40.6	26.3	5.6	47.0	94	50
AYPC.W72.0304	2.650	1095.1	171.9	40.1	93.2	17.9	3.9	45.7	80	36
AYPC.W72.0305	1.990	851.6	50.8	9.6	53.1	18.9	4.7	40.0		
AYPC.W72.0308	2.320	970.5	92.4	14.2	65.2	24.5	6.1	40.0		
AYPC.W72.0321	1.529	653.0	32.0	7.0	45.9	8.9	2.51	35.5	71	27

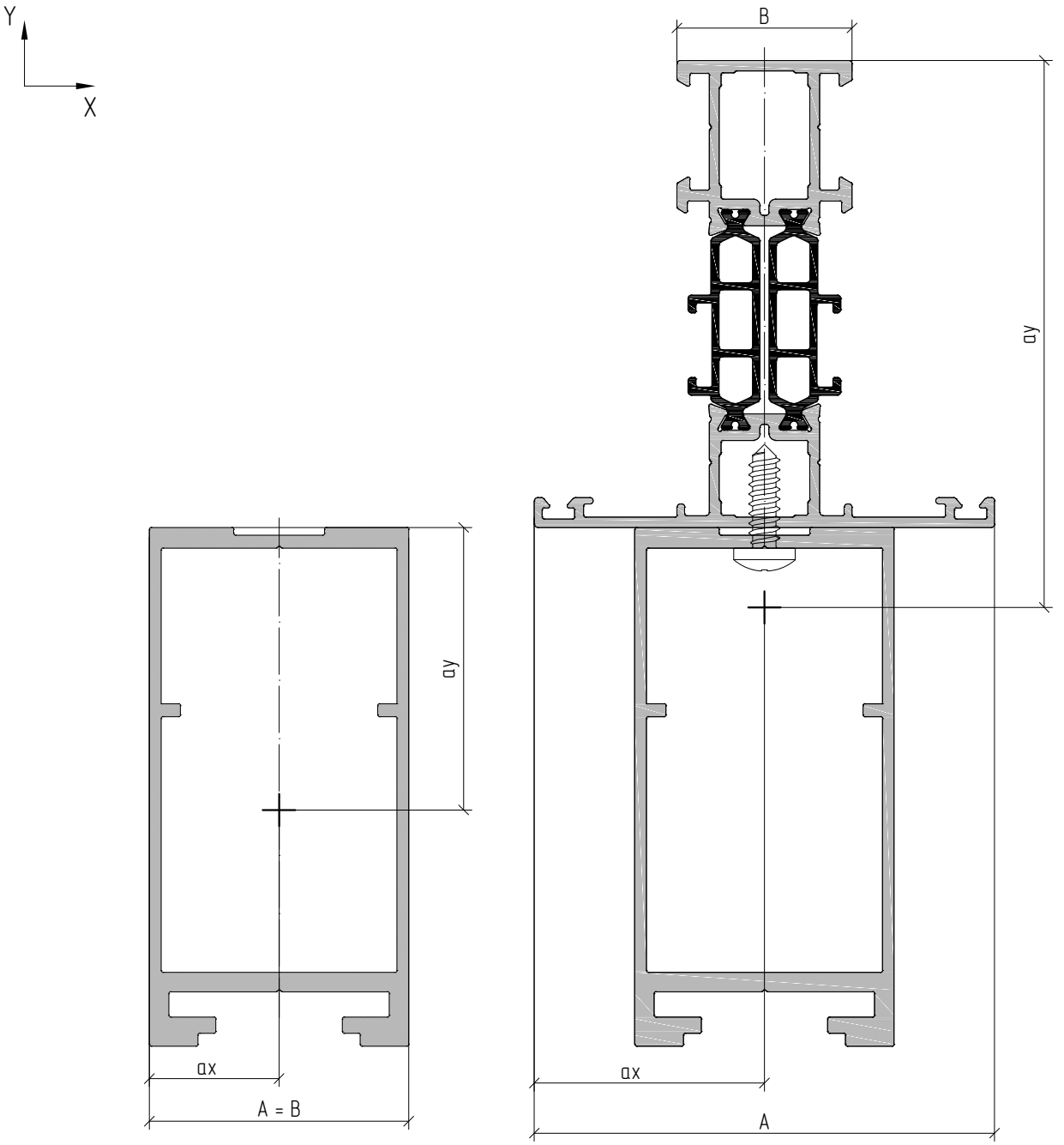

AYPC.SL160.0702

Profile	m, kg/m	S, mm^2	Jx, cm^4	Wx, cm^3	ay, mm	Jy, cm^4	Wy, cm^3	ax, mm	A, mm	B, mm
AYPC.SL160.0702	1.57	583.00	49.50	11.40	43.60	15.00	7.50	20.00	40	
AYPC.W72.0301 + AYPC.SL160.0702	3.01	1230.90	162.40	19.30	84.30	23.52	6.60	35.50	71	27
AYPC.W72.0302 + AYPC.SL160.0702	3.19	1295.16	175.80	21.50	81.60	28.65	7.20	40.00	80	36
AYPC.W72.0303 + AYPC.SL160.0702	3.51	1414.04	197.80	25.60	77.20	41.26	8.80	47.00	94	50

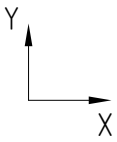

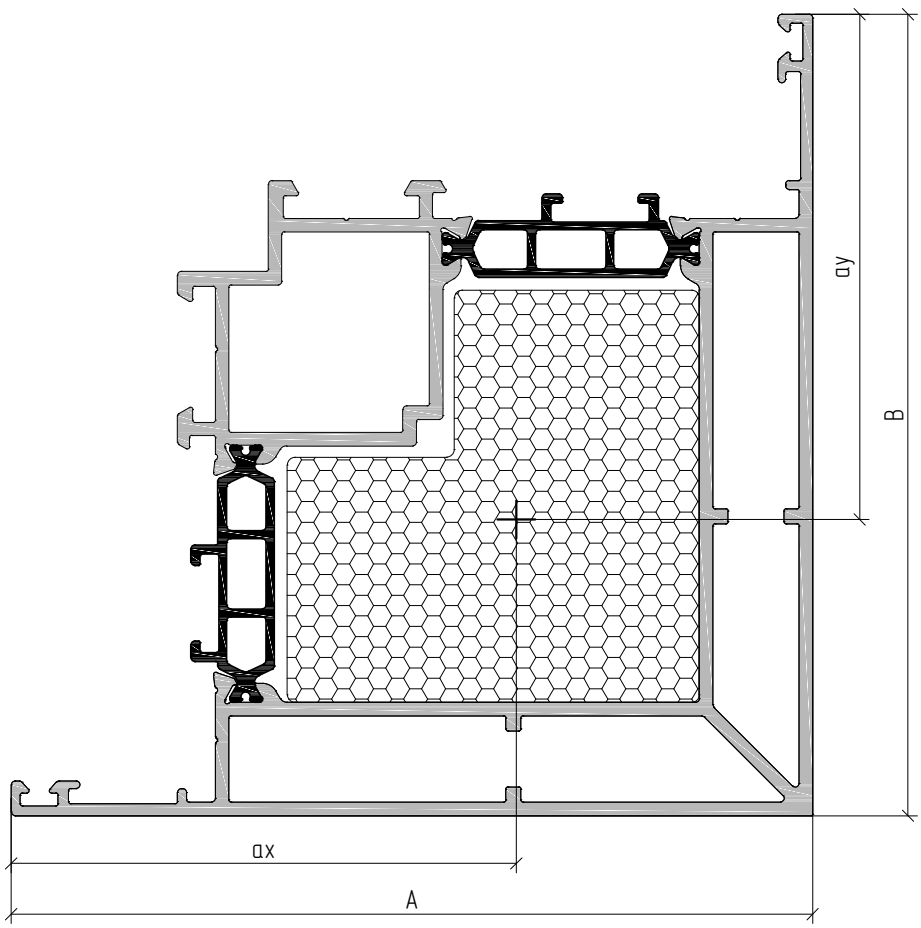

Profile	m, kg/m	S, mm^2	Jx, cm^4	Wx, cm^3	ay, mm	Jy, cm^4	Wy, cm^3	ax, mm	A, mm	B, mm
AYPC.W72.0804	2.37	950.80	39.10	10.20	38.10	39.10	10.20	38.20	74.5	
AYPC.W72.0805	1.91	768.50	24.30	6.60	37.00	26.60	8.30	32.00	64	74
AYPC.W72.0840	3.17	1242.40	74.00	11.10	66.80	99.24	14.86	66.80	106	
AYPC.W72.0841	2.98	1204.80	70.00	11.00	63.50	92.86	14.62	63.50	106	

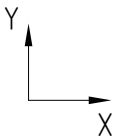

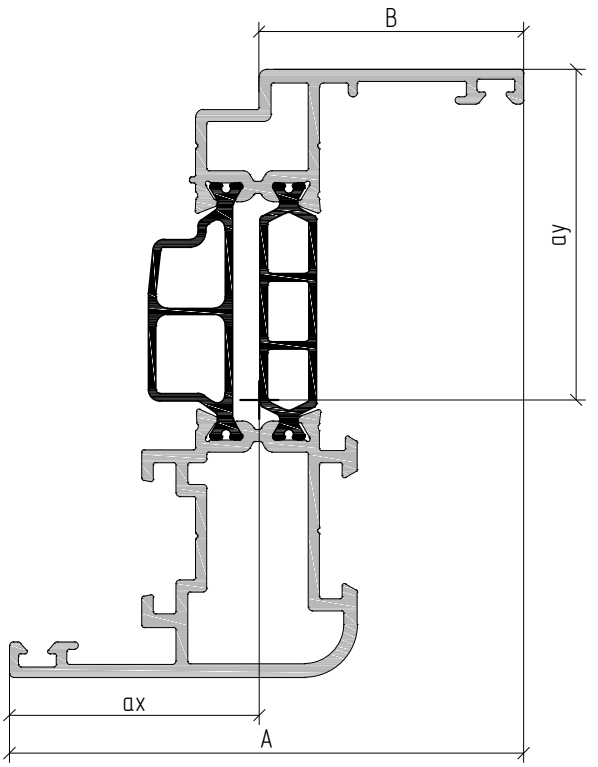

Profile	m, kg/m	S, mm^2	Jx, cm^4	Wx, cm^3	ay, mm	Jy, cm^4	Wy, cm^3	ax, mm	A, mm	B, mm
AYPC.W72.0201	1.51	639.00	30.60	7.00	43.70	8.20	2.30	35.00	68	35
AYPC.W72.0202	1.75	729.50	36.50	8.60	42.60	14.40	3.60	39.90	78	45
AYPC.W72.0203	2.11	862.30	46.50	11.30	41.30	28.80	6.20	46.70	92	59
AYPC.W72.0212	1.85	765.20	39.28	9.24	42.52	17.55	4.16	42.17	83	50
AYPC.W72.0221	1.50	735.80	30.90	7.02	44.00	8.20	2.35	34.90	68	35
AYPC.W72.0222	1.76	835.10	37.00	8.60	43.00	14.48	3.64	39.80	78	45
AYPC.W72.0223	2.11	868.63	46.30	11.13	41.60	29.00	6.24	46.50	92	59

ALUTECH ALTW72
Windows and doors
with thermal break

INTEGRATED WINDOWS

02.01.01 System description

02.02.01 Order information

02.03.01 Accessories

02.04.01 Table of glazing

02.05.01 Sections and junctions

02.07.01 Machining and assemblage

02.08.01 Statics

W72 window integrated into curtain walling

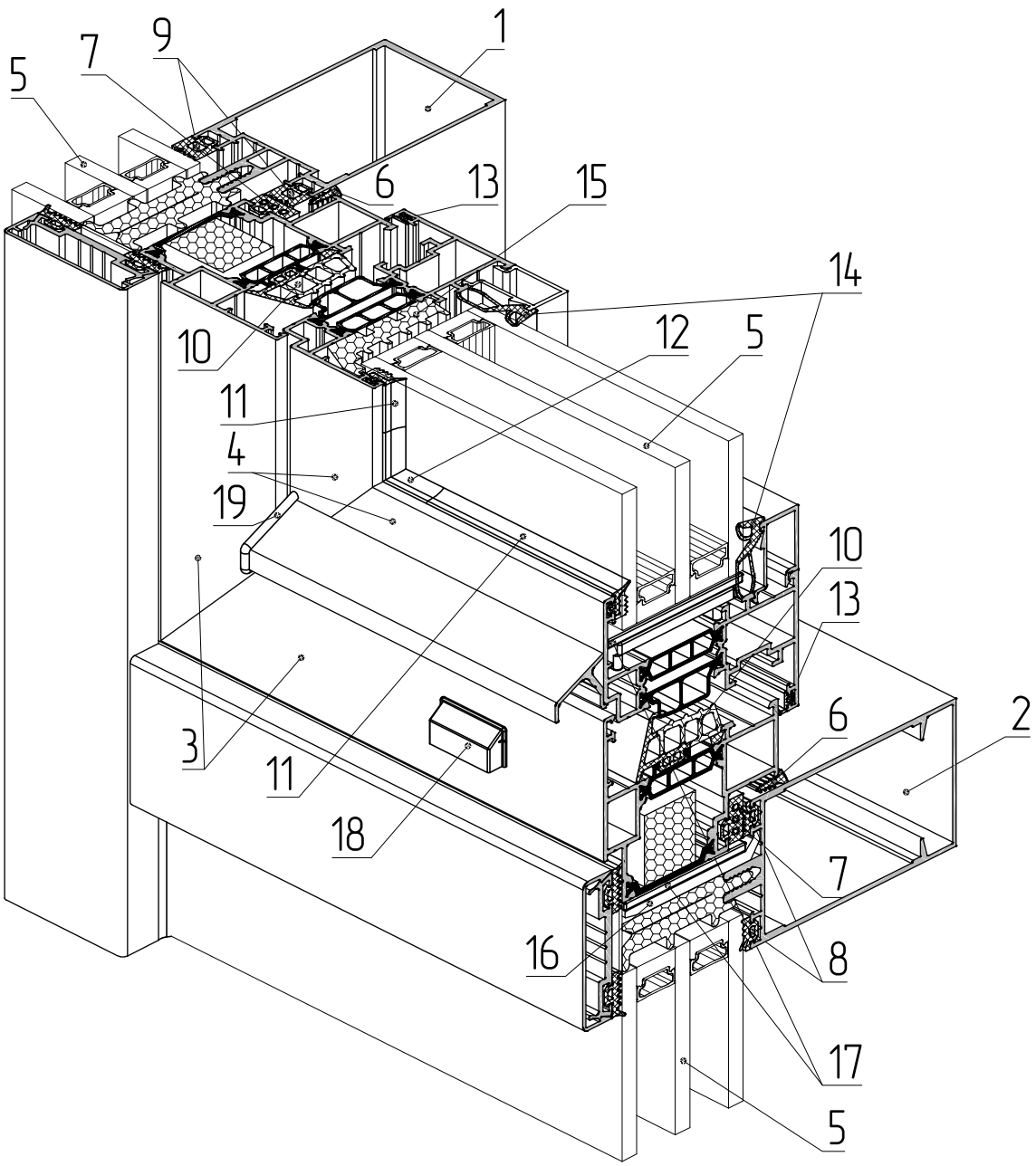

1 – AYPC.F50.0103 mullion profile
2 – AYPC.F50.0206 transom profile
3 – AYPC.W72.0131 frame profile
4 – AYPC.W72.0221 sash profile
5 – 50 mm infill unit
6 – FRK38 rubber gasket
7 – FRK129 rubber gasket
8 – FRK14 rubber gasket
9 – FRK17 rubber gasket
10 – FRK195 rubber gasket
11 – FRK197 rubber gasket
12 – FRK179 rubber corner
13 – FRK98 rubber gasket
14 – FRK193 rubber gasket
15 – AYPC.W72.0911 seam sealing
16 – AYPC.F50.0952-01 bearing support
17 – leveling support kit
18 – AYPC.C48.0919M drain plug
19 – AYPC.W62.0999 drain plug

Article	Name / Drawing	Weight, kg/m	Exterior perimeter, mm	Cross sectional area, mm²	Code	Profile colour	Bar length, m	Quantity in pack		Weight of a pack	
								pcs	m	net, kg	gross, kg
AYPC.W72.0130E	Frame profile 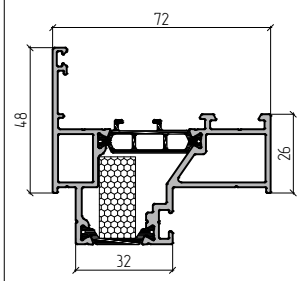	1.59	386	667	10920821 10920824 10920830 10920831 109208808	RAL9016 RAL8014 RAL8017 RAL9006 A00-D6	6.5	2	13	21.5 21.5 21.5 21.5 20.7	21.9 21.9 21.9 21.9 21.1
AYPC.W72.0130NE	Frame profile 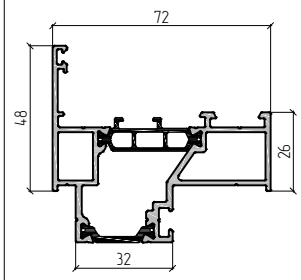	1.58	386	667	10920900 10920921 10920924 10920930 10920931 109209808	00 RAL9016 RAL8014 RAL8017 RAL9006 A00-D6	6.5	2	13	20.5 21.2 21.2 21.2 21.2 20.5	21.0 21.7 21.7 21.7 21.7 21.0
AYPC.W72.0131E	Frame profile 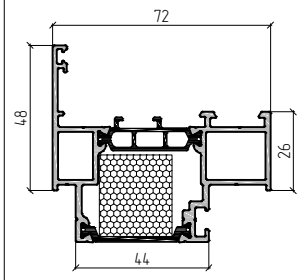	1.55	386	658.3	10921121 10921124 10921130 10921131 109211808	RAL9016 RAL8014 RAL8017 RAL9006 A00-D6	6.5	2	13	20.9 20.9 20.9 20.9 20.2	21.4 21.4 21.4 21.4 20.7
AYPC.W72.0131NE	Frame profile 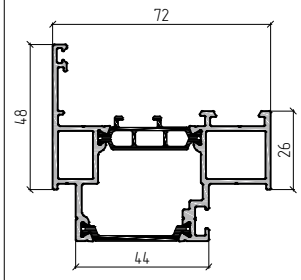	1.54	386	658.3	10921200 10921221 10921224 10921230 10921231 109212808	00 RAL9016 RAL8014 RAL8017 RAL9006 A00-D6	6.5	2	13	20.0 20.8 20.8 20.8 20.8 20.0	20.4 21.2 21.2 21.2 21.2 20.4
AYPC.W72.0132E	Frame profile 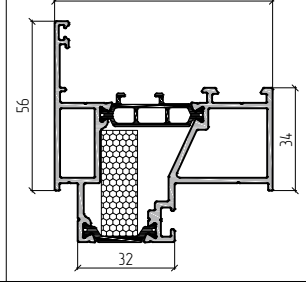	1.81	404	746.6	10921421 10921424 10921430 10921431 109214808	RAL9016 RAL8014 RAL8017 RAL9006 A00-D6	6.5	2	13	24.4 24.4 24.4 24.4 23.5	24.9 24.9 24.9 24.9 24.0

Article	Name / Drawing	Weight, kg/m	Exterior perimeter, mm	Cross sectional area, mm²	Code	Profile colour	Bar length, m	Quantity in pack		Weight of a pack	
								pcs	m	net, kg	gross, kg
AYPC.W72.0132NE	Frame profile 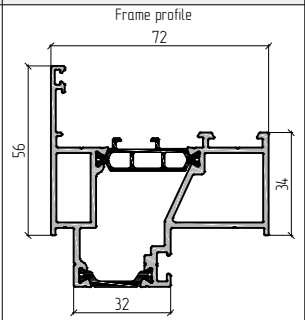	1.80	404	746.6	10921500 10921521 10921524 10921530 10921531 109215808	00 RAL9016 RAL8014 RAL8017 RAL9006 A00-D6	6.5	2	13	23.4 24.3 24.3 24.3 24.3 23.4	23.9 24.8 24.8 24.8 24.8 23.9
AYPC.W72.0133E	Frame profile 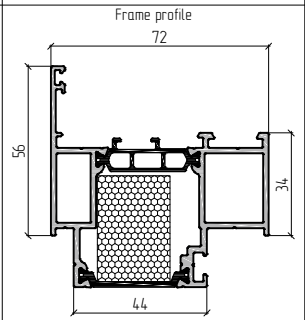	1.76	405	734.4	10921721 10921724 10921730 10921731 109217808	RAL9016 RAL8014 RAL8017 RAL9006 A00-D6	6.5	2	13	23.7 23.7 23.7 23.7 22.9	24.2 24.2 24.2 24.2 23.4
AYPC.W72.0133NE	Frame profile 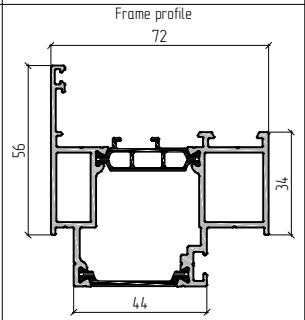	1.74	405	734.4	10921800 10921821 10921824 10921830 10921831 109218808	00 RAL9016 RAL8014 RAL8017 RAL9006 A00-D6	6.5	2	13	22.6 23.5 23.5 23.5 23.5 22.6	23.1 24.0 24.0 24.0 24.0 23.1
AYPC.C48.0709	Corner crimping profile 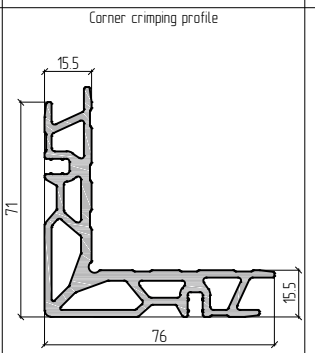	2.57	365	950.7	10408000	00	3.25	2	6.5	16.7	17

Image	Code	Article	Application
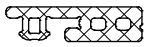	10417700	FRK159	EPDM rubber corner. Quantity in pack – 200 m. Weight – 0.068 kg/m
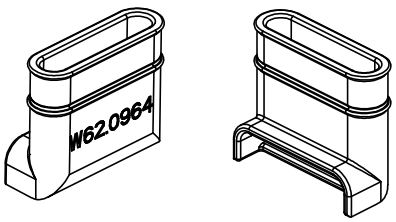	10840700	AYPC.W62.0964	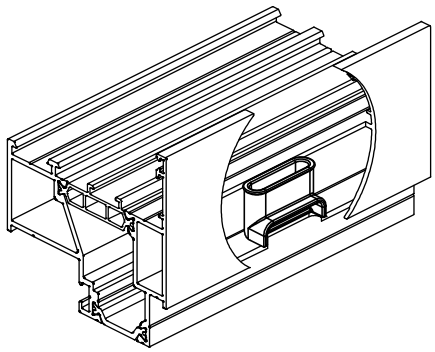 Drain plug. Quantity in pack – 50 pcs
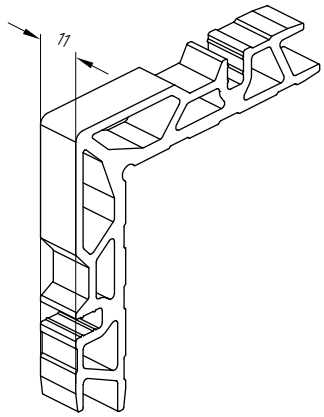	10826800	AYPC.W62.0969-01	Clamping corner made from AYPC.C48.0709 profile. Quantity in pack – 49 pcs 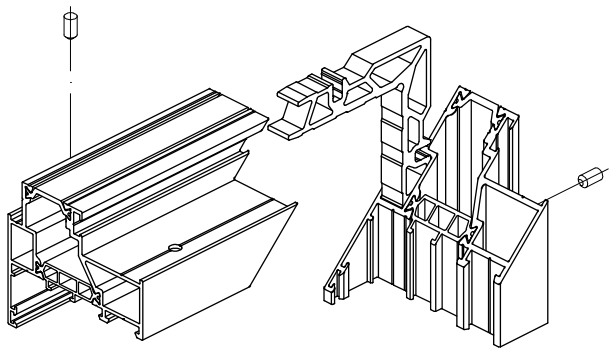 For frame profiles AYPC.W72.0130, AYPC.W72.0131
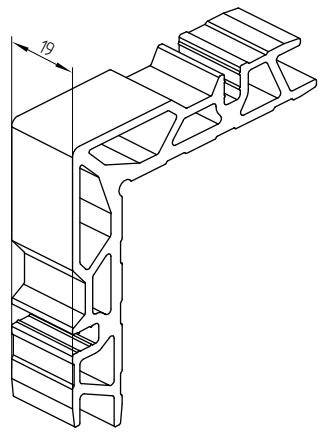	10826900	AYPC.W62.0969-02	Clamping corner made from AYPC.C48.0709 profile. Quantity in pack – 28 pcs 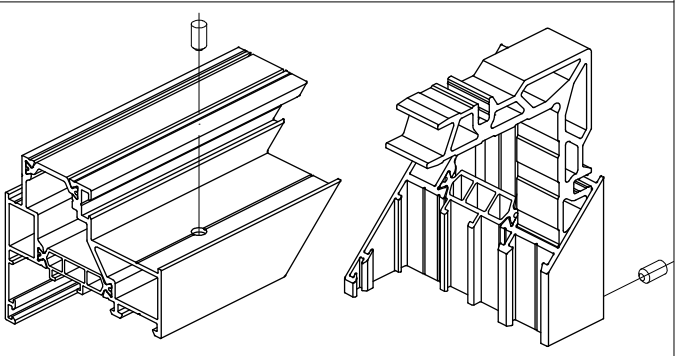 For frame profiles AYPC.W72.0130, AYPC.W72.0131
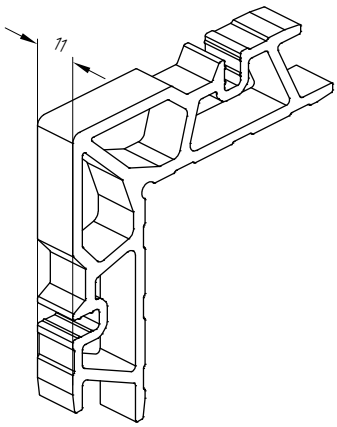	10812400	AYPC.W62.0953-01	Clamping corner made from AYPC.W50.0703 profile. Quantity in pack – 200 pcs 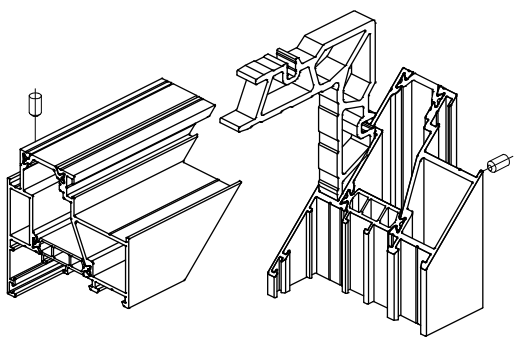 For frame profiles AYPC.W72.0132, AYPC.W72.0133

Image	Code	Article	Application
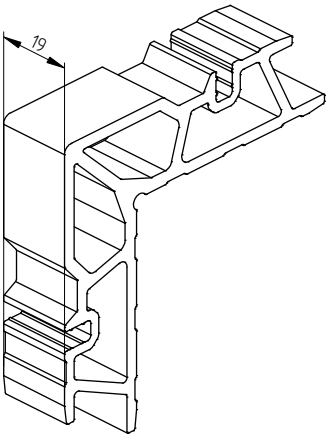	10812500	AYPC.W62.0953-02	Clamping corner made from AYPC.W50.0703 profile. Quantity in pack – 100 pcs 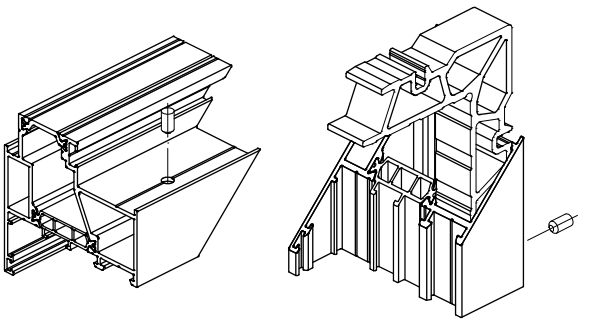 For frame profiles AYPC.W72.0132, AYPC.W72.0133

Installation of ALT W72 series window units into facade using special AYPC.W72.0130, AYPC.W72.0131, AYPC.W72.0132, AYPC.W72.0133 frame profiles

Mullion

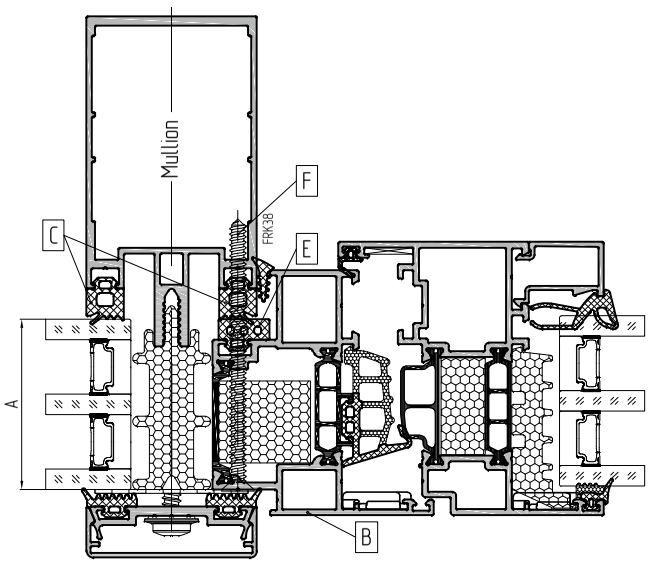

Lap joint of transom

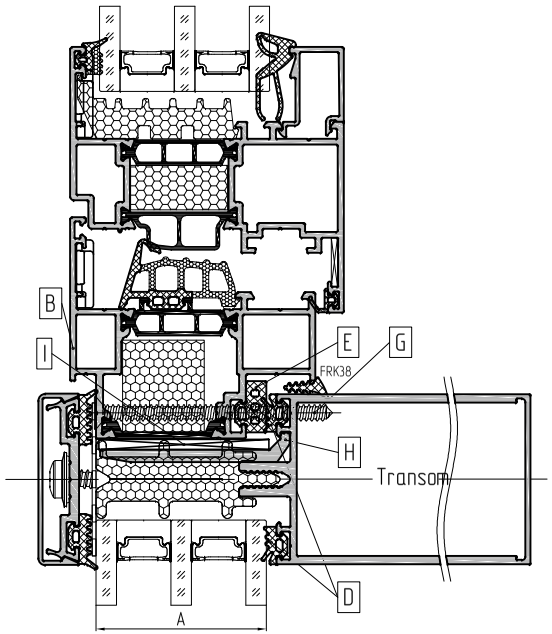

Infill unit thickness	Frame profile	Gasket			Self-tapping screw		Bearing support	Leveling support
		on mullion	on transom	on frame	on mullion, 300 mm spacing	on transom, 300 mm spacing		
A	B	C	D	E	F	G	H	I
34 mm	AYPC.W72.0130(N) AYPC.W72.0132(N)	FRK19	FRK16	FRK127	4.8x70-A2 DIN7982	4.8x60-A2 DIN7982	AYPC.F50.0941-02	100x38x1 (100x38x3)
36 mm		FRK18	FRK15	FRK128				
38 mm		FRK17	FRK14	FRK129				
40 mm		FRK19	FRK16	FRK130	4.8x70-A2 DIN7982	4.8x60-A2 DIN7982	AYPC.F50.0952	100x44x1 (100x44x3)
42 mm		FRK18	FRK15	FRK131				
44 mm		FRK17	FRK14	FRK132				
46 mm	AYPC.W72.0131(N) AYPC.W72.0133(N)	FRK19	FRK16	FRK127	4.8x80-A2 DIN7982	4.8x70-A2 DIN7982	AYPC.F50.0952-01	100x50x1 (100x50x3)
48 mm		FRK18	FRK15	FRK128				
50 mm		FRK17	FRK14	FRK129				

Information about FRK14-FRK19, FRK127-FRK132 gaskets and AYPC.F50.0941-02, AYPC.F50.0952, AYPC.F50.0952-01 bearing supports is provided in ALT F50 catalogue

Installation of ALT W72 series window units into facade using special AYPC.W72.0130, AYPC.W72.0131, AYPC.W72.0132, AYPC.W72.0133 frame profiles

Mullion

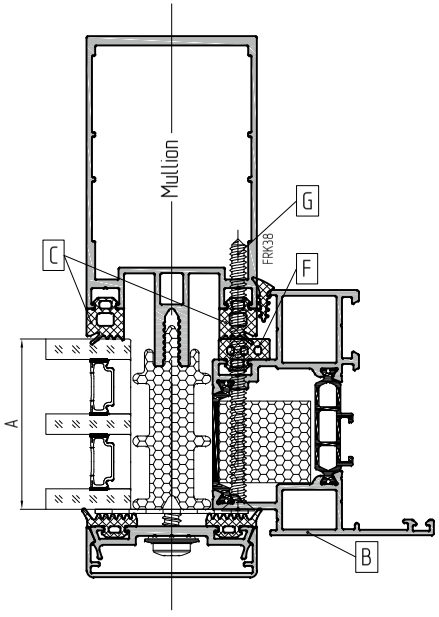

Notch connection of 2 level transom

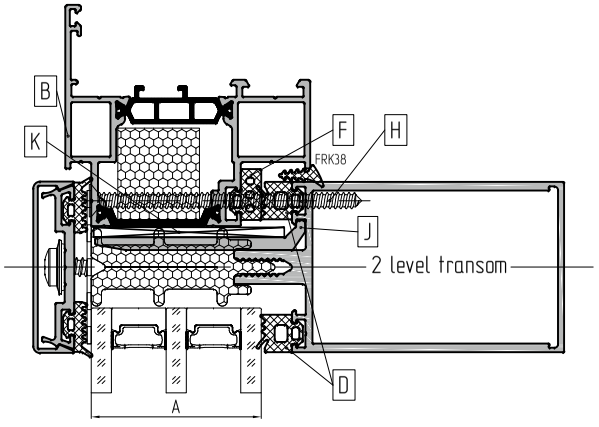

Lap joint of transom

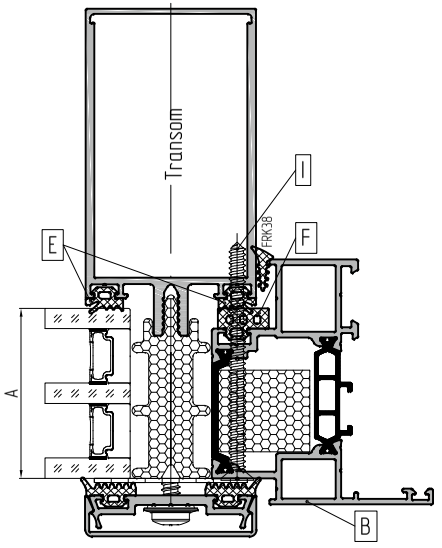

Infill unit thickness	Frame profile	Gasket				Self-tapping screw			Bearing support	Leveling support
		on mullion	on 2 level transom	on transom lap joint	on frame	on mullion, 300 mm spacing	on 2 level transom, 300 mm spacing	on transom lap joint, 300 mm spacing		
A	B	C	D	E	F	G	H	I	J	K
34 mm	AYPC.W72.0130(N) AYPC.W72.0132(N)	FRK19	FRK19	FRK16	FRK127	4.8x70-A2 DIN7982	4.8x60-A2 DIN7982	4.8x60-A2 DIN7982	AYPC.F50.0952	100x44x1 (100x44x3)
36 mm		FRK18	FRK18	FRK15	FRK128					
38 mm		FRK17	FRK17	FRK14	FRK129					
40 mm		FRK19	FRK19	FRK16	FRK130	4.8x70-A2 DIN7982	4.8x70-A2 DIN7982	4.8x60-A2 DIN7982	AYPC.F50.0952-01	100x50x1 (100x50x3)
42 mm		FRK18	FRK18	FRK15	FRK131					
44 mm		FRK17	FRK17	FRK14	FRK132					
46 mm	AYPC.W72.0131(N) AYPC.W72.0133(N)	FRK19	FRK19	FRK16	FRK127	4.8x80-A2 DIN7982	4.8x80-A2 DIN7982	4.8x70-A2 DIN7982	AYPC.F50.0952-02	100x56x1 (100x56x3)
48 mm		FRK18	FRK18	FRK15	FRK128					
50 mm		FRK17	FRK17	FRK14	FRK129					

Information about FRK14–FRK19, FRK127–FRK132 gaskets and AYPC.F50.0952, AYPC.F50.0952-01, AYPC.F50.0952-02 bearing supports is provided in ALT F50 catalogue

Installation of ALT W72 series window units into facade using special AYPC.W72.0130, AYPC.W72.0131, AYPC.W72.0132, AYPC.W72.0133 frame profiles

Transom as a mullion

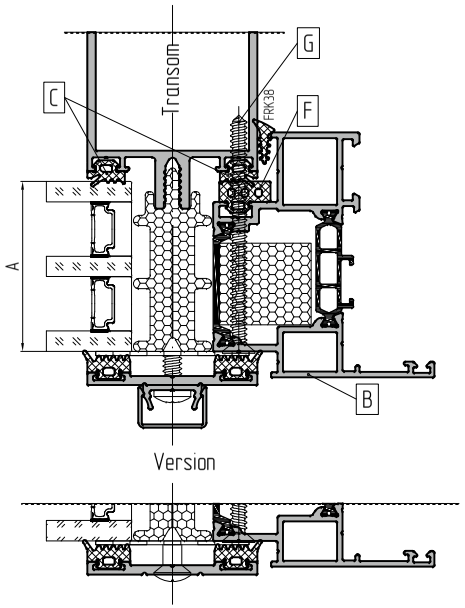

Butt joint of transom

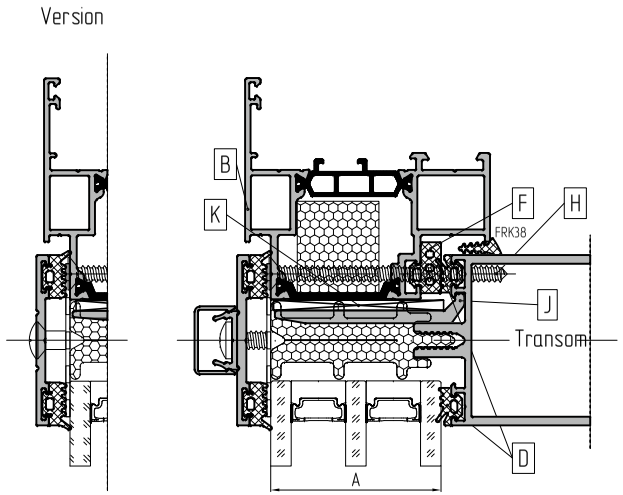

Butt joint of transom

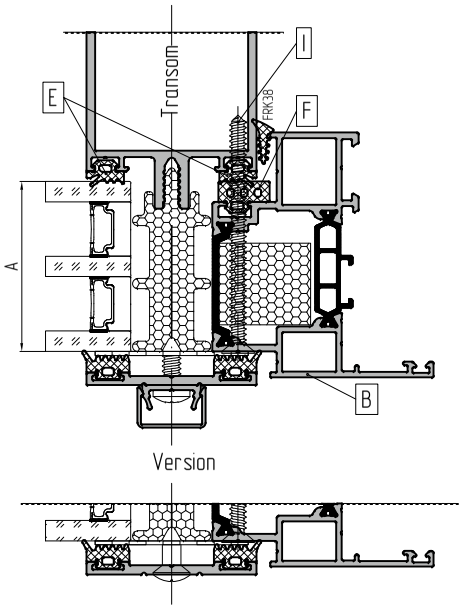

Infill unit thickness	Frame profile	Gasket				Self-tapping screw			Bearing support	Leveling support
		on transom	on transom butt joint	on transom butt joint	on frame	on transom, 300 mm spacing	on transom butt joint, 300 mm spacing	on transom butt joint, 300 mm spacing		
A	B	C	D	E	F	G	H	I	J	K
34 mm	AYPC.W72.0130(N) AYPC.W72.0132(N)	FRK16	FRK16	FRK16	FRK127	4.8x60-A2 DIN7982	4.8x60-A2 DIN7982	4.8x60-A2 DIN7982	AYPC.F50.0941-02	100x38x1 (100x38x3)
36 mm		FRK15	FRK15	FRK15	FRK128					
38 mm		FRK14	FRK14	FRK14	FRK129					
40 mm		FRK16	FRK16	FRK16	FRK130	4.8x60-A2 DIN7982	4.8x60-A2 DIN7982	4.8x60-A2 DIN7982	AYPC.F50.0952	100x44x1 (100x44x3)
42 mm		FRK15	FRK15	FRK15	FRK131					
44 mm		FRK14	FRK14	FRK14	FRK132					
46 mm*	AYPC.W72.0131(N) AYPC.W72.0133(N)	FRK16	FRK16	FRK16	FRK127	4.8x70-A2 DIN7982	4.8x70-A2 DIN7982	4.8x70-A2 DIN7982	AYPC.F50.0952-01	100x50x1 (100x50x3)
48 mm*		FRK15	FRK15	FRK15	FRK128					
50 mm*		FRK14	FRK14	FRK14	FRK129					

Information about FRK14-FRK19, FRK127-FRK132 gaskets and AYPC.F50.0941-02, AYPC.F50.0952, AYPC.F50.0952-01 bearing supports is provided in ALT F50 catalogue.
* The option without cover cap for given glazing thicknesses is not possible

Installation of ALT W72 series window units into facade using special AYPC.W72.0130, AYPC.W72.0131, AYPC.W72.0132, AYPC.W72.0133 frame profiles

Transom as a mullion

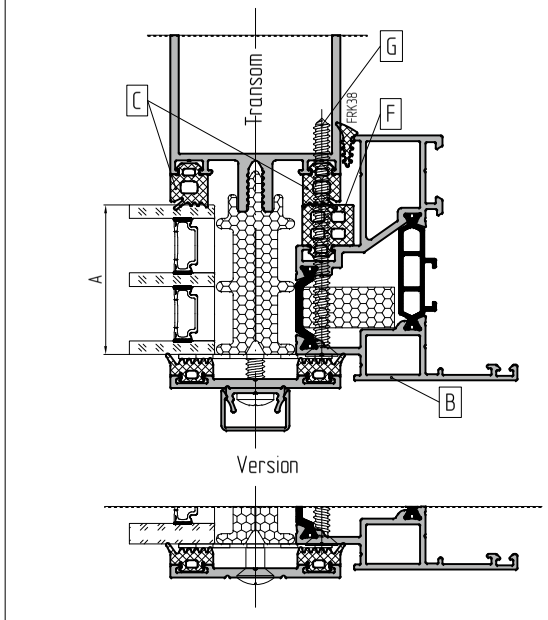

Butt joint of transom and connecting element

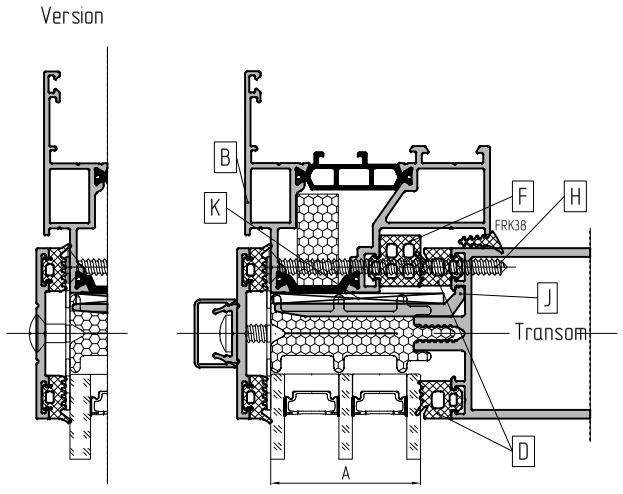

Butt joint of transom and connecting element

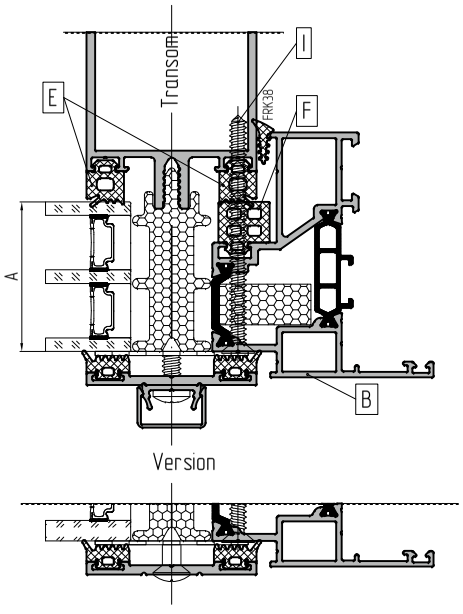

Infill unit thickness	Frame profile	Gasket				Self-tapping screw			Bearing support	Leveling support
		on transom	on transom butt joint	on transom butt joint	on frame	on transom, 300 mm spacing	on transom butt joint, 300 mm spacing	on transom butt joint, 300 mm spacing		
A	B	C	D	E	F	G	H	I	J	K
34 mm	AYPC.W72.0130(N) AYPC.W72.0132(N)	FRK19	FRK19	FRK19	FRK127	4.8x60-A2 DIN7982	4.8x60-A2 DIN7982	4.8x60-A2 DIN7982	AYPC.F50.0952	100x44x1 (100x44x3)
36 mm		FRK18	FRK18	FRK18	FRK128					
38 mm		FRK17	FRK17	FRK17	FRK129					
40 mm*		FRK19	FRK19	FRK19	FRK130	4.8x70-A2 DIN7982	4.8x70-A2 DIN7982	4.8x70-A2 DIN7982	AYPC.F50.0952-01	100x50x1 (100x50x3)
42 mm*		FRK18	FRK18	FRK18	FRK131					
44 mm*		FRK17	FRK17	FRK17	FRK132					
46 mm*	AYPC.W72.0131(N) AYPC.W72.0133(N)	FRK19	FRK19	FRK19	FRK127	4.8x80-A2 DIN7982	4.8x80-A2 DIN7982	4.8x80-A2 DIN7982	AYPC.F50.0952-02	100x56x1 (100x56x3)
48 mm*		FRK18	FRK18	FRK18	FRK128					
50 mm*		FRK17	FRK17	FRK17	FRK129					

Information about FRK14-FRK19, FRK127-FRK132 gaskets and AYPC.F50.0952, AYPC.F50.0952-01, AYPC.F50.0952-02 bearing supports is provided in ALT F50 catalogue.
* The option without cover cap for given glazing thicknesses is not possible

Installation of ALT W72 series window units into facade using special AYPC.W72.0130, AYPC.W72.0131, AYPC.W72.0132, AYPC.W72.0133 frame profiles

2 level transom as a mullion

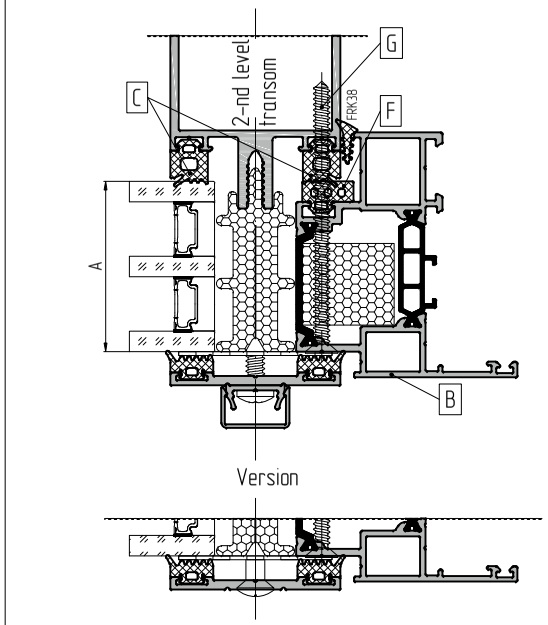

Lap joint of transom

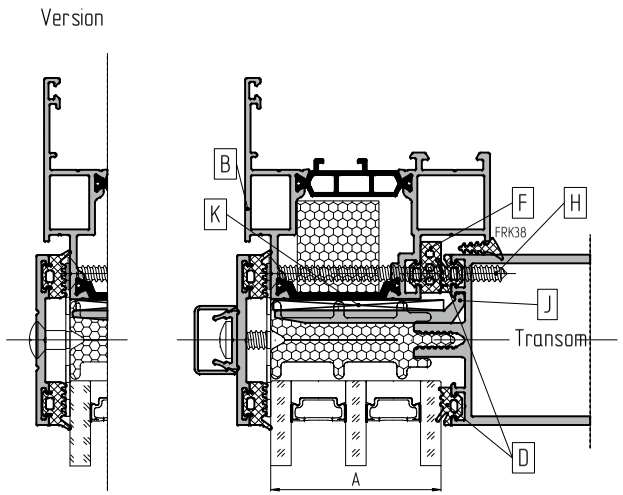

Butt joint of 2 level transom

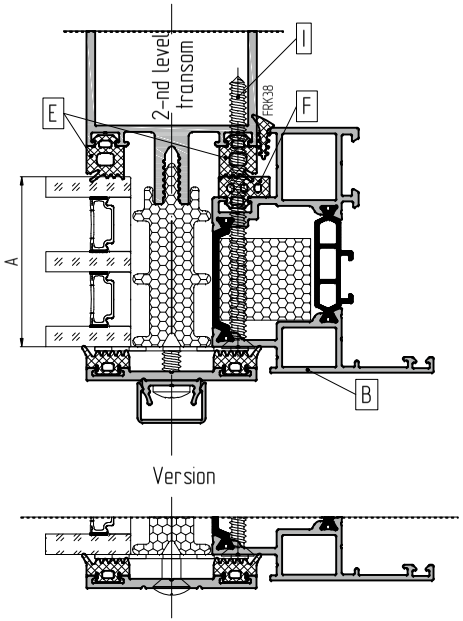

Infill unit thickness	Frame profile	Gasket				Self-tapping screw			Bearing support	Leveling support
		on 2 level transom	on transom lap joint	on transom butt joint	on frame	on 2 level transom, 300 mm spacing	on transom lap joint, 300 mm spacing	on transom butt joint, 300 mm spacing		
A	B	C	D	E	F	G	H	I	J	K
34 mm	AYPC.W72.0130(N) AYPC.W72.0132(N)	FRK19	FRK16	FRK19	FRK127	4.8x60-A2 DIN7982	4.8x60-A2 DIN7982	4.8x60-A2 DIN7982	AYPC.F50.0941-02	100x38x1 (100x38x3)
36 mm		FRK18	FRK15	FRK18	FRK128					
38 mm		FRK17	FRK14	FRK17	FRK129					
40 mm		FRK19	FRK16	FRK19	FRK130	4.8x70-A2 DIN7982	4.8x60-A2 DIN7982	4.8x70-A2 DIN7982	AYPC.F50.0952	100x44x1 (100x44x3)
42 mm		FRK18	FRK15	FRK18	FRK131					
44 mm		FRK17	FRK14	FRK17	FRK132					
46 mm*	AYPC.W72.0131(N) AYPC.W72.0133(N)	FRK19	FRK16	FRK19	FRK127	4.8x80-A2 DIN7982	4.8x70-A2 DIN7982	4.8x80-A2 DIN7982	AYPC.F50.0952-01	100x50x1 (100x50x3)
48 mm*		FRK18	FRK15	FRK18	FRK128					
50 mm*		FRK17	FRK14	FRK17	FRK129					

Information about FRK14-FRK19, FRK127-FRK132 gaskets and AYPC.F50.0941-02, AYPC.F50.0952, AYPC.F50.0952-01 bearing supports is provided in ALT F50 catalogue

* The option without cover cap for given glazing thicknesses is not possible.

Installation of ALT W72 series window units into facade using transom bar profile as a frame

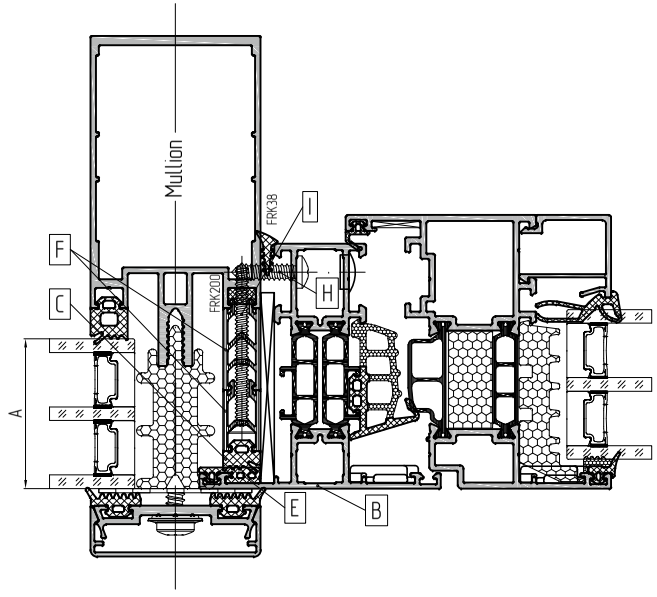

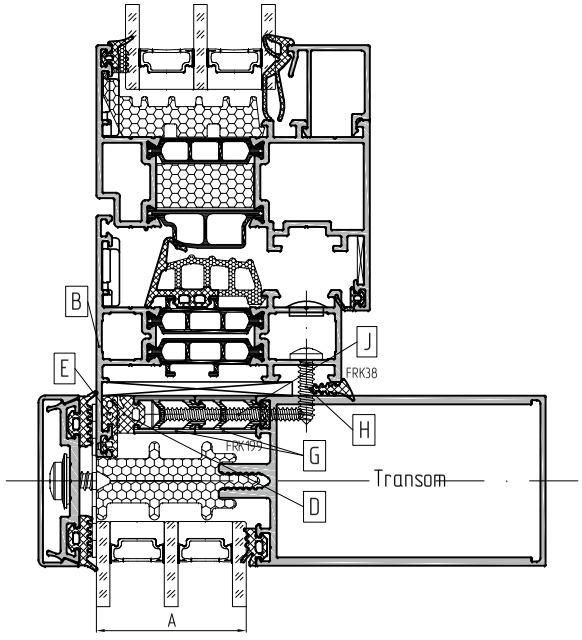

Infill unit thickness	Frame profile	Gasket			Distance profile / gasket		Self-tapping screw		
		on mullion	on transom	on frame	on mullion	on transom	on mullion/transom, 300 mm spacing	on mullion distance profile, 300 mm spacing	on transom distance profile, 300 mm spacing
A	B	C	D	E	F	G	H	I	J
22 mm	AYPC.W72.0301 AYPC.W72.0302(N) AYPC.W72.0303(N)	FRK15	FRK15	FRK159	AYPC.F50.0902-01 / FRK200	AYPC.F50.0901-01 / FRK199	4.8x19-A2 DIN7981	3.9x32-A2 DIN7982	3.9x25-A2 DIN7982
24 mm									
26 mm									
28 mm					AYPC.F50.0903-01 / FRK200	AYPC.F50.0902-01 / FRK199	4.8x19-A2 DIN7981	3.9x38-A2 DIN7982	3.9x32-A2 DIN7982
30 mm									
32 mm									
34 mm					2 x AYPC.F50.0901-01 / FRK200	AYPC.F50.0903-01 / FRK199	4.8x19-A2 DIN7981	3.9x45-A2 DIN7982	3.9x38-A2 DIN7982
36 mm									
38 mm									
40 mm					AYPC.F50.0901-01 + AYPC.F50.0902-01 / FRK200	2 x AYPC.F50.0901-01 / FRK199	4.8x19-A2 DIN7981	3.9x50-A2 DIN7982	3.9x45-A2 DIN7982
42 mm									
44 mm									

Information about FRK17 gasket and AYPC.F50.0901-01 ... AYPC.F50.0903-01 distance profiles is provided in ALT F50 catalogue

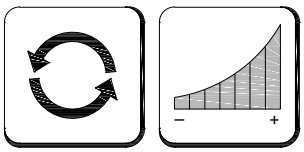

Option 1

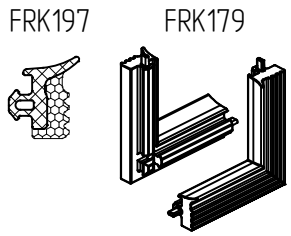

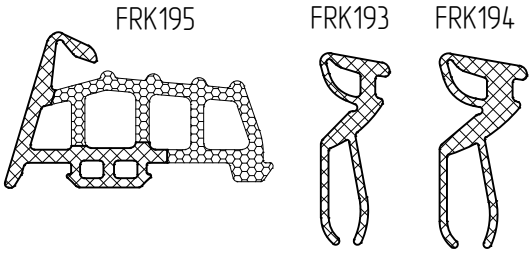

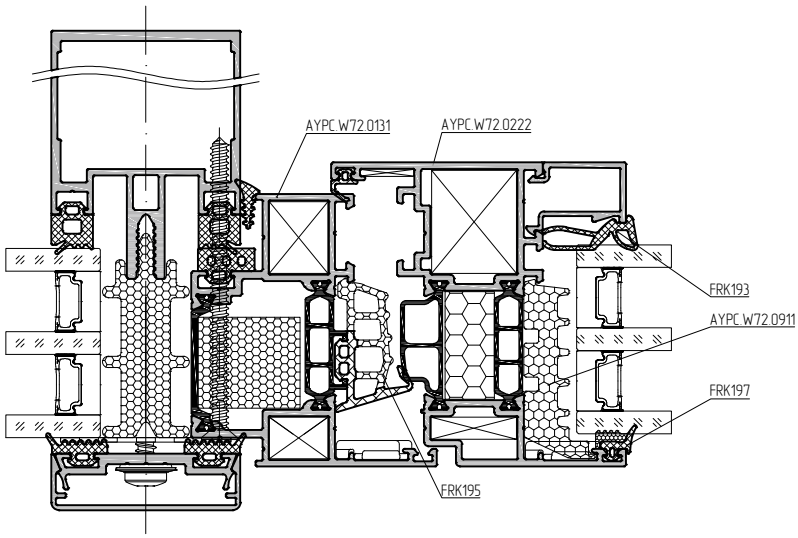

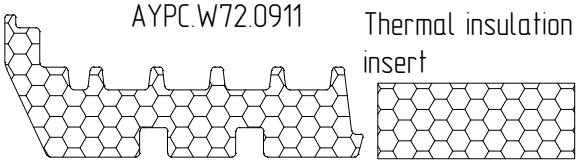

Option 2

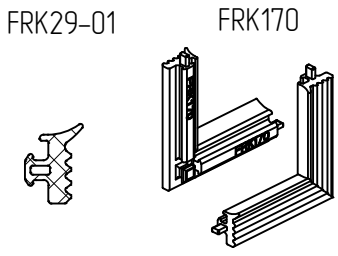

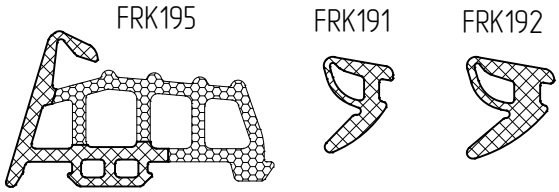

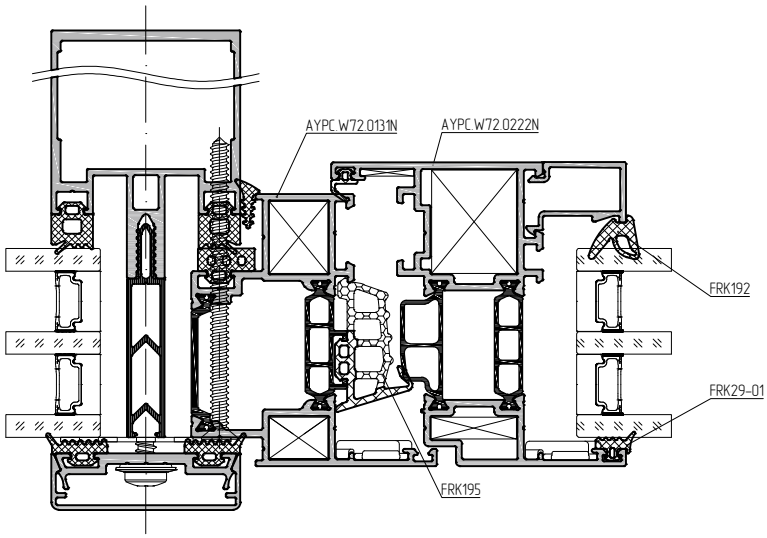

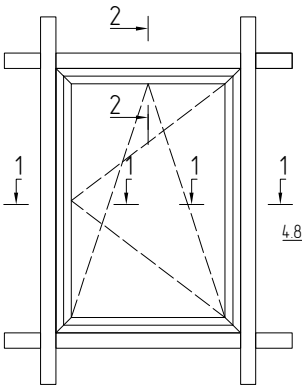

1–1

Scale 1:2

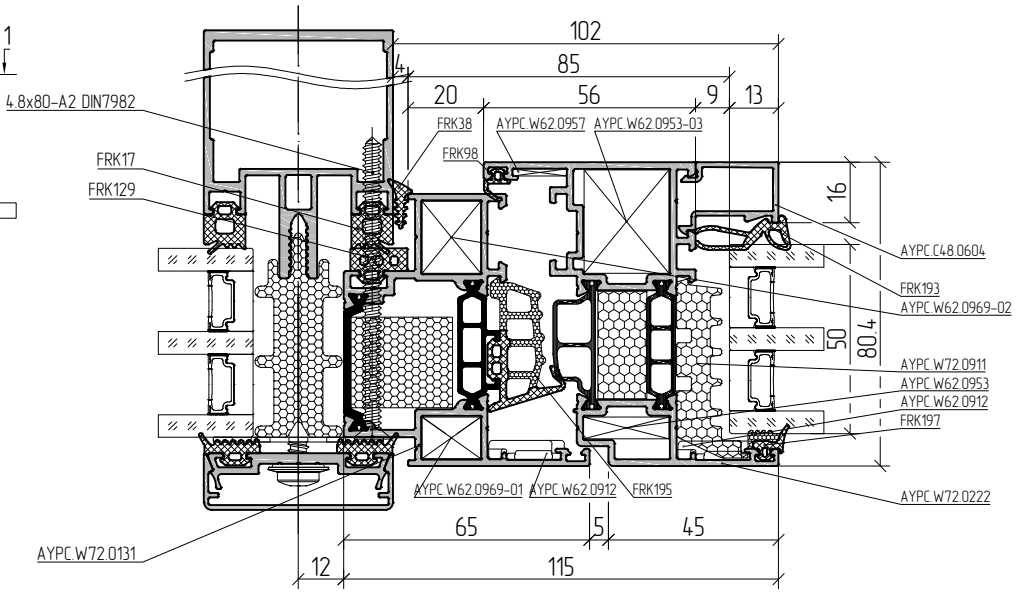

2–2

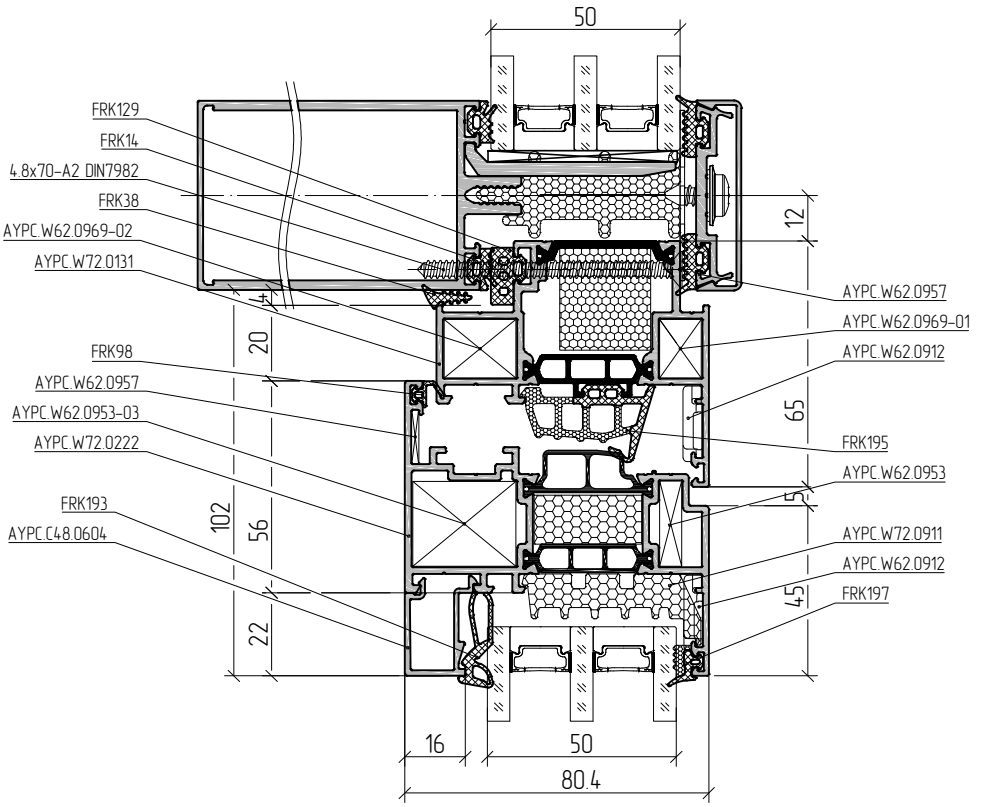

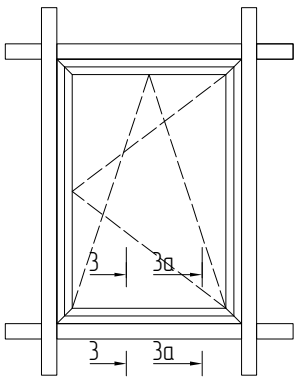

Scale 1:2

3–3

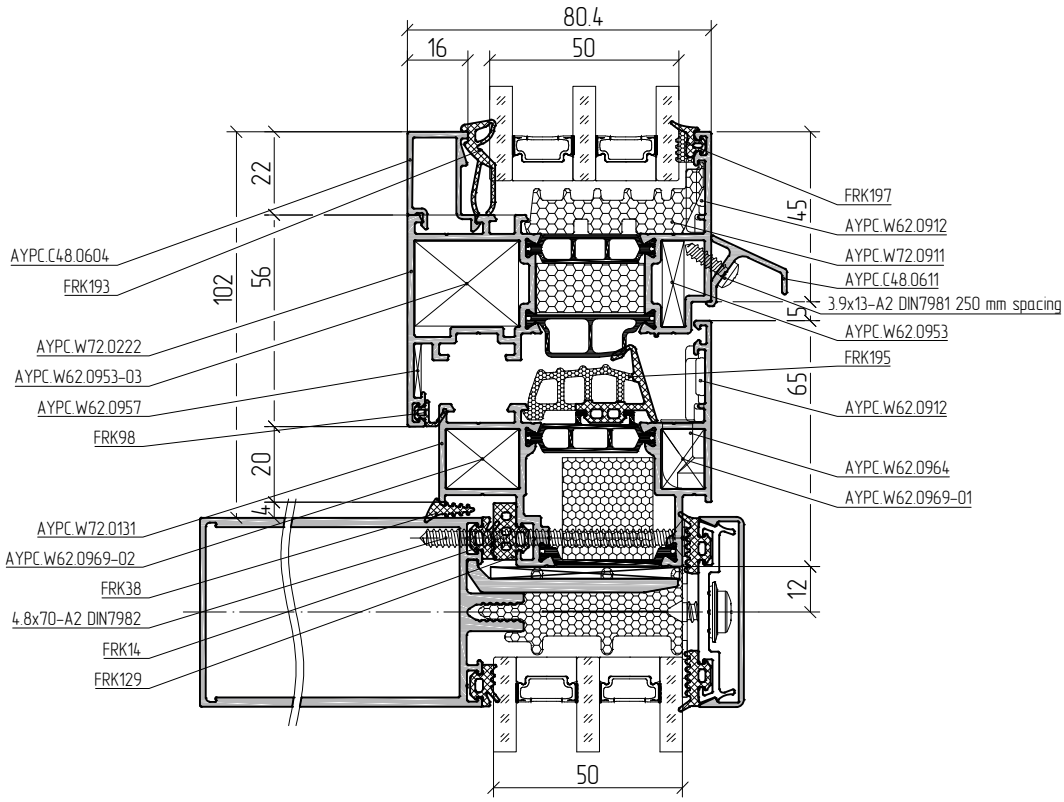

3a–3a

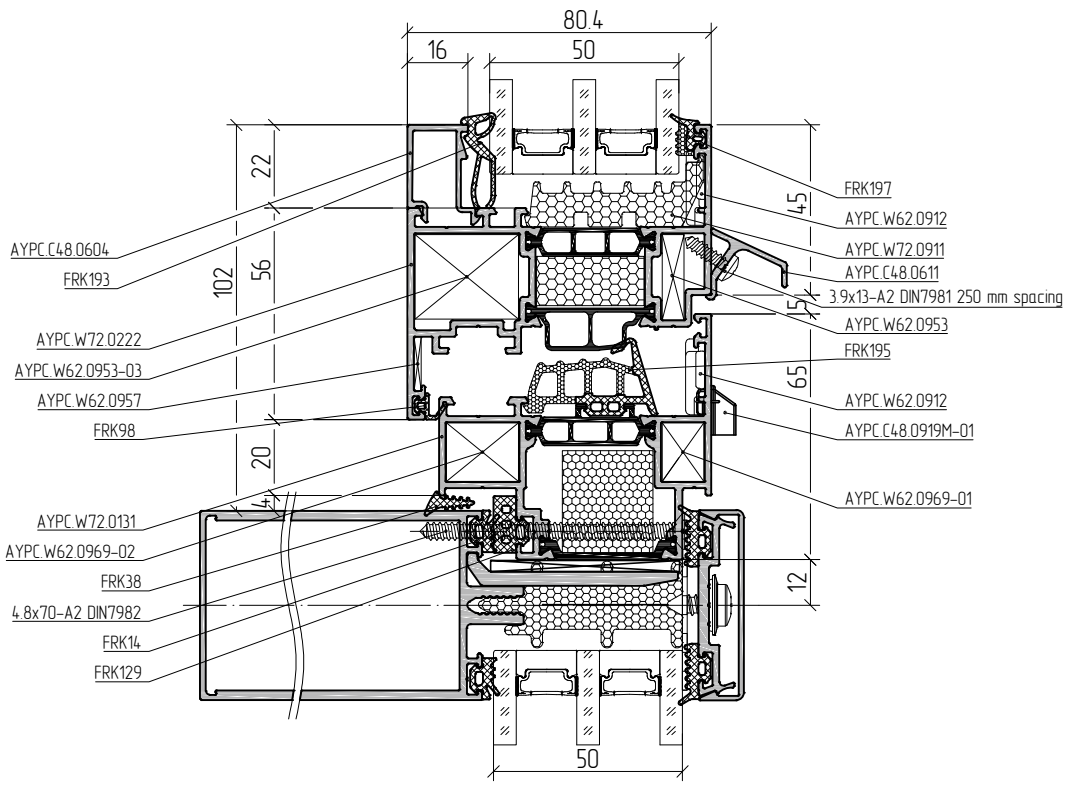

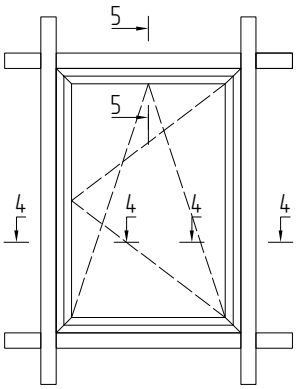

Scale 1:2

4–4

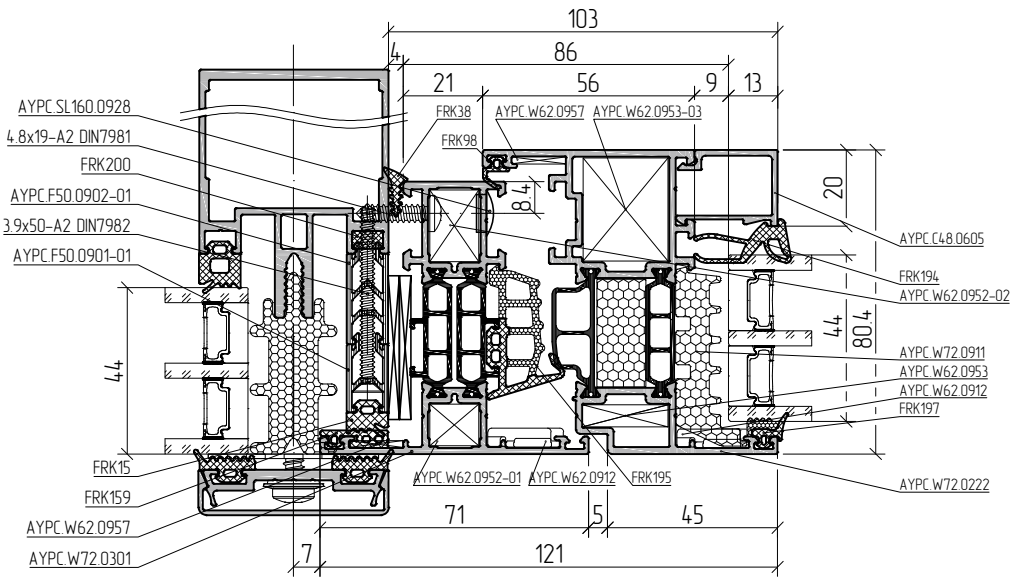

5–5

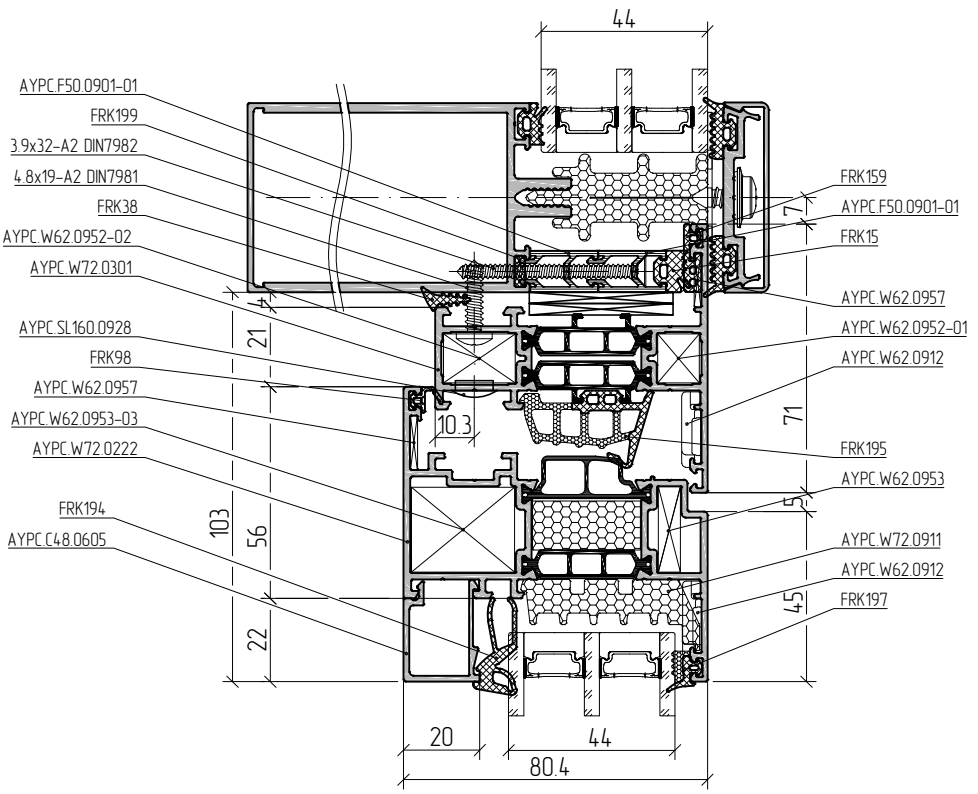

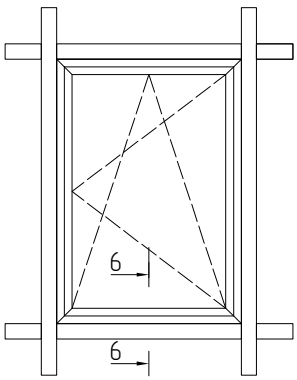
6
6

Scale 1:2

6–6

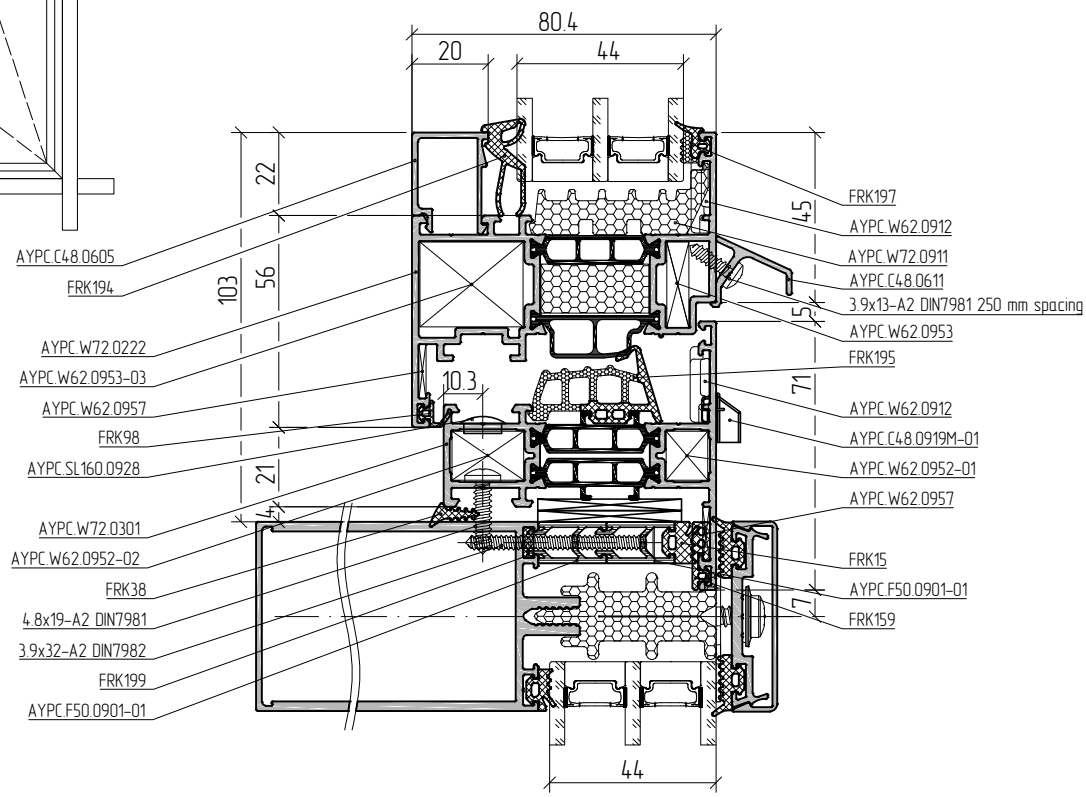
80.4
20
44
22
103
56
21
4
10.3
45
5
71
7
AYPC.C48.0605
FRK194
AYPC.W72.0222
AYPC.W62.0953-03
AYPC.W62.0957
FRK98
AYPC.SL160.0928
AYPC.W72.0301
AYPC.W62.0952-02
FRK38
4.8x19-A2 DIN7981
3.9x32-A2 DIN7982
FRK199
AYPC.F50.0901-01
FRK197
AYPC.W62.0912
AYPC.W72.0911
AYPC.C48.0611
3.9x13-A2 DIN7981 250 mm spacing
AYPC.W62.0953
FRK195
AYPC.W62.0912
AYPC.C48.0919M-01
AYPC.W62.0952-01
AYPC.W62.0957
FRK15
AYPC.F50.0901-01
FRK159
44

Calculation of the window unit integrated into curtain walling

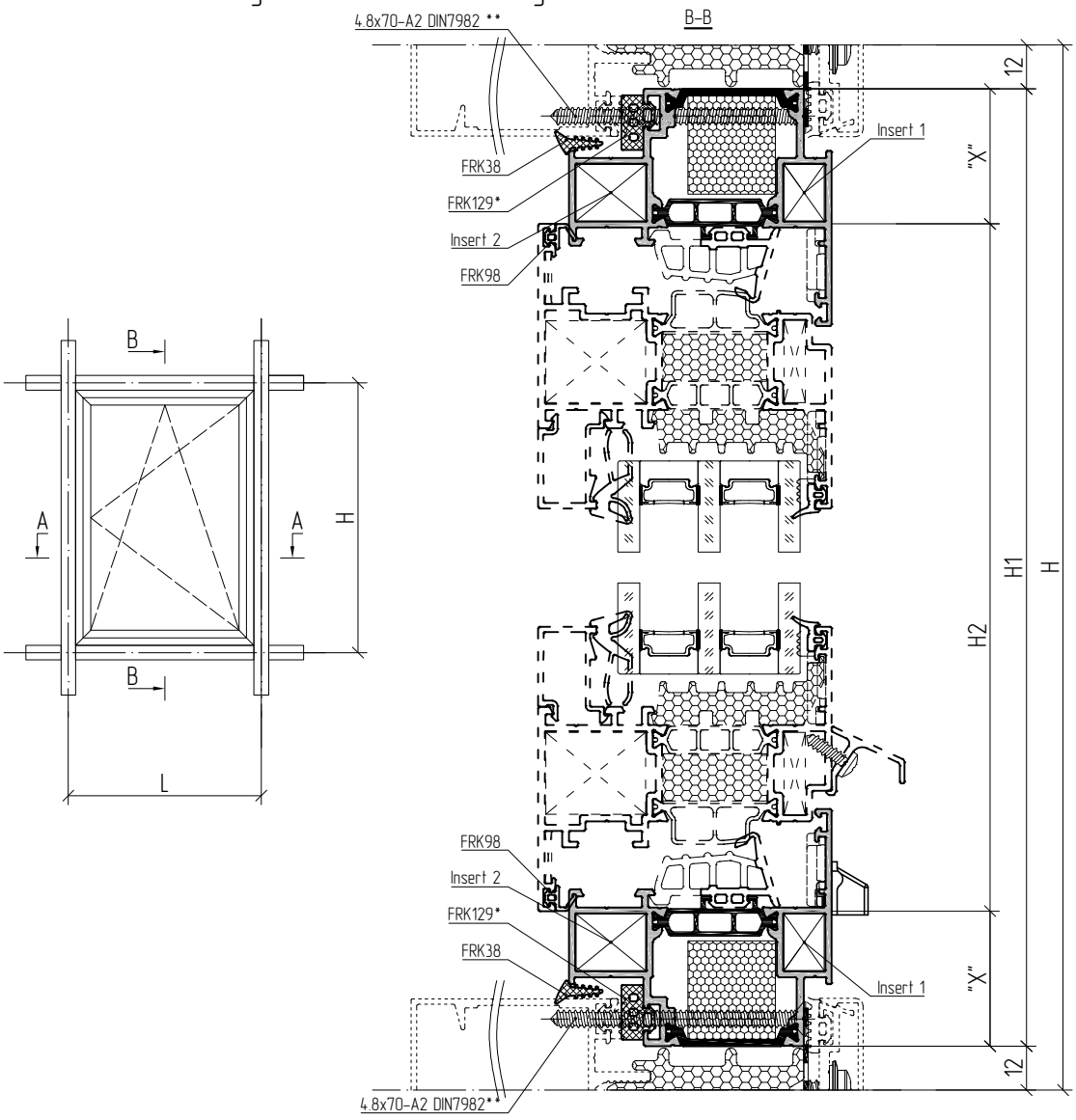

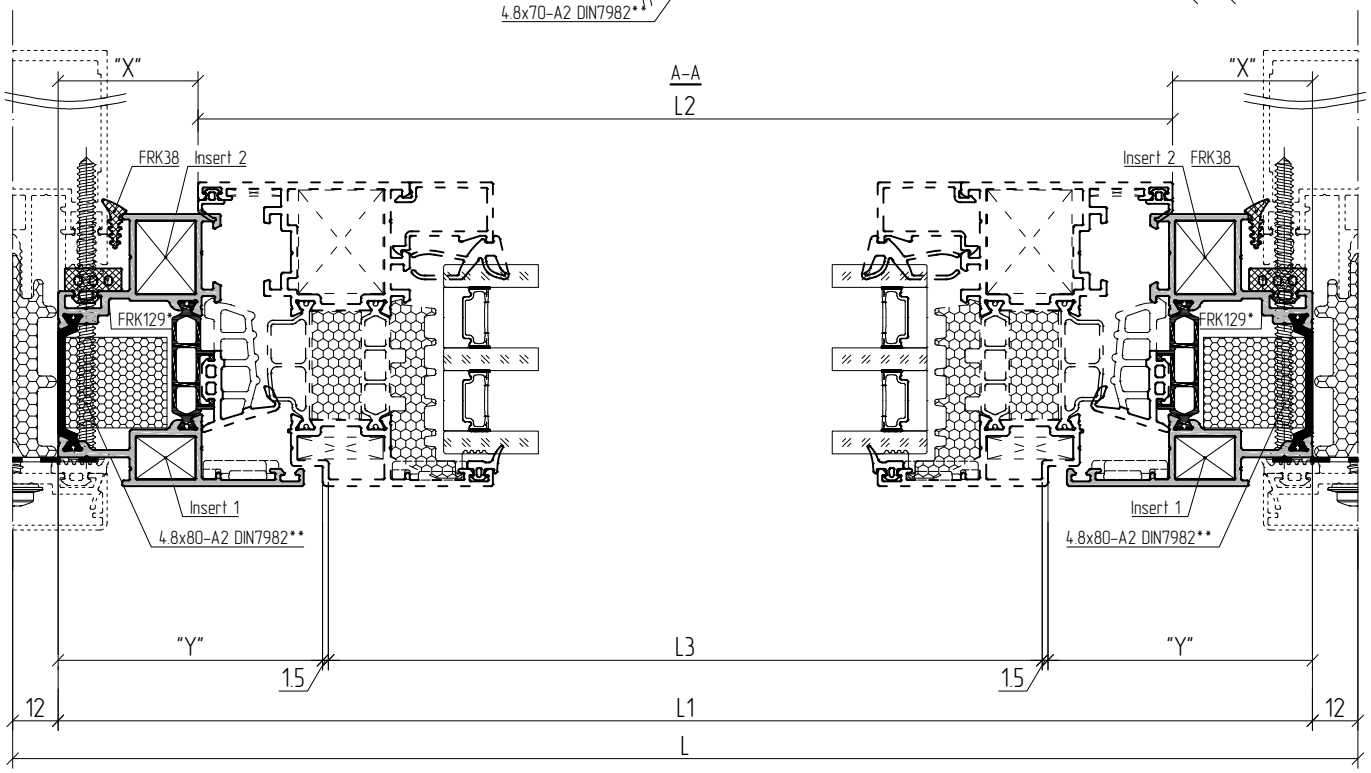

Calculation of the window unit integrated into curtain walling

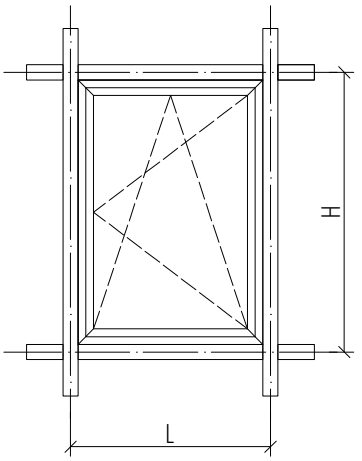

Frame profile	Gasket			Self-tapping screws			Plug
	FRK38	FRK129 *	FRK159	4.8x70-A2 DIN7982 **	4.8x80-A2 DIN7982 **	4.8x19-A2 DIN7981	AYPC.SL160.0928
AYPC.W72.0130, AYPC.W72.0131, AYPC.W72.0132, AYPC.W72.0133,	(L1+H1)x2	L1x2+H1x2	–	L1x2/300	H1x2/300	–	–
AYPC.W72.0301, AYPC.W72.0302, AYPC.W72.0303		–	(L+H)x2	–	–	((L1+H1)/300)x2	((L1+H1)/300)x2

Frame profile			Sash profile	Drain profile	Clamping corner	
Article		Dimension / quantity	Dimension / quantity	Dimension / quantity	Clamping corner 1 / quantity	Clamping corner 2 / quantity
AYPC.W72.0130		L1=L-24 / 2pcs H1=H-24 / 2 pcs	L2=L1-74 / 2 pcs H2=H1-74 / 2 pcs	L3=L1-143 / 1 pcs	AYPC.W62.0969-01 4 pcs	AYPC.W62.0969-02 4 pcs
AYPC.W72.0131		L1=L-24 / 2pcs H1=H-24 / 2 pcs	L2=L1-74 / 2 pcs H2=H1-74 / 2 pcs	L3=L1-143 / 1 pcs	AYPC.W62.0969-01 4 pcs	AYPC.W62.0969-02 4 pcs
AYPC.W72.0132		L1=L-24 / 2pcs H1=H-24 / 2 pcs	L2=L1-90 / 2 pcs H2=H1-90 / 2 pcs	L3=L1-159 / 1 pcs	AYPC.W62.0953-01 4 pcs	AYPC.W62.0953-02 4 pcs
AYPC.W72.0133		L1=L-24 / 2pcs H1=H-24 / 2 pcs	L2=L1-90 / 2 pcs H2=H1-90 / 2 pcs	L3=L1-159 / 1 pcs	AYPC.W62.0953-01 4 pcs	AYPC.W62.0953-02 4 pcs
AYPC.W72.0301		L1=L-14 / 2pcs H1=H-14 / 2 pcs	L2=L1-86 / 2 pcs H2=H1-86 / 2 pcs	L3=L1-155 / 1 pcs	AYPC.W62.0952-01 4 pcs	AYPC.W62.0952-02 4 pcs
AYPC.W72.0302	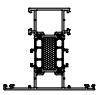	L1=L-14 / 2pcs H1=H-14 / 2 pcs	L2=L1-104 / 2 pcs H2=H1-104 / 2 pcs	L3=L1-173 / 1 pcs	AYPC.W62.0953-01 4 pcs	AYPC.W62.0953-02 4 pcs
AYPC.W72.0303	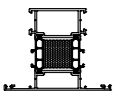	L1=L-14 / 2pcs H1=H-14 / 2 pcs	L2=L1-132 / 2 pcs H2=H1-132 / 2 pcs	L3=L1-201 / 1 pcs	AYPC.W62.0954-02 4 pcs	AYPC.W62.0954-03 4 pcs

Note:
* Gasket selection depends on infill unit thickness (see section 02.04 – Table of glazing).
** Self-tapping screws selection depends on infill unit thickness (see section 02.04 – Table of glazing).
Information on selection of the sash profiles and accessories as well as window installation details is available in the catalogue (see section 01.06 – Example of standard system calculation)

Correspondence table of clamping corners

Corner connection of frame profiles

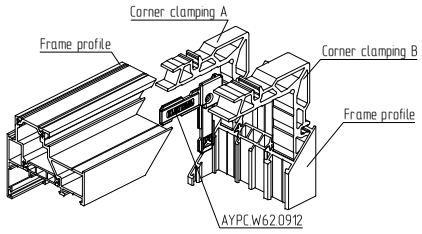

Article	Clamping corner A	Clamping corner B
AYPC.W72.0130 AYPC.W72.0131	AYPC.W62.0969-01	AYPC.W62.0969-02
AYPC.W72.0132 AYPC.W72.0133	AYPC.W62.0953-01	AYPC.W62.0953-02
AYPC.W72.0301 AYPC.W72.0302 AYPC.W72.0303	AYPC.W62.0952-01 AYPC.W62.0953-01 AYPC.W62.0954-02	AYPC.W62.0952-02 AYPC.W62.0953-02 AYPC.W62.0954-03

Clamping corners made from AYPC.C48.0709 profile

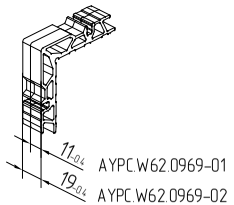

Clamping corners made from AYPC.C48.0702 profile

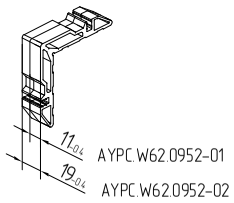

Clamping corners made from AYPC.W50.0703 profile

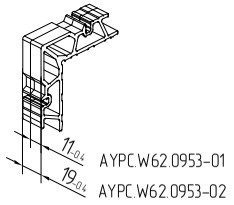

Clamping corners made from AYPC.C48.0704 profile

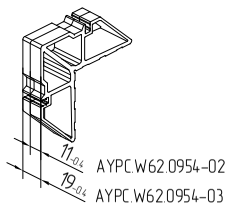

Profile machining for corner connection by crimping

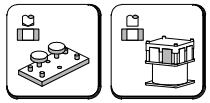

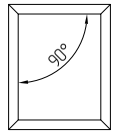

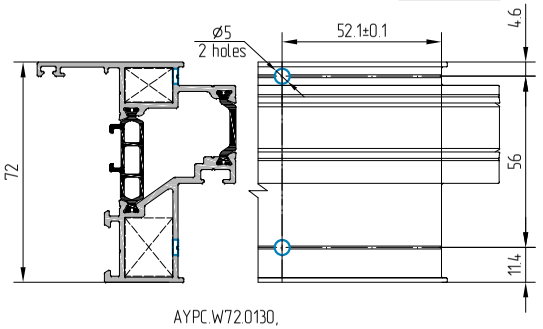

AYPC.W72.0130,
AYPC.W72.0131

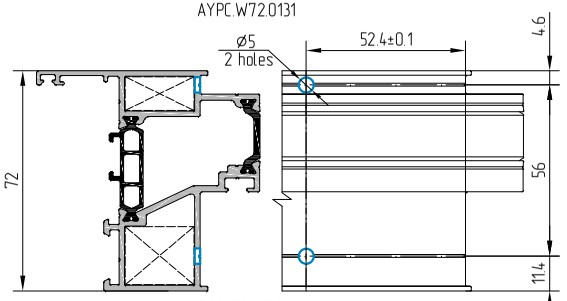

AYPC.W72.0132,
AYPC.W72.0133

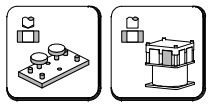

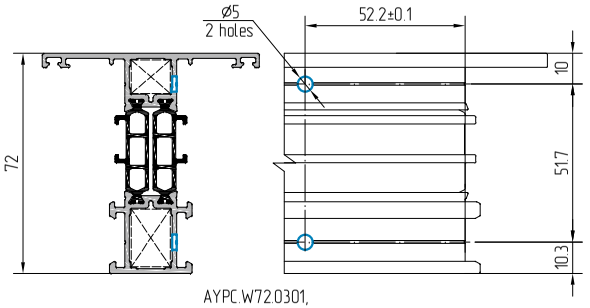

AYPC.W72.0301,
AYPC.W72.0302,
AYPC.W72.0303

Data for corner connection by crimping

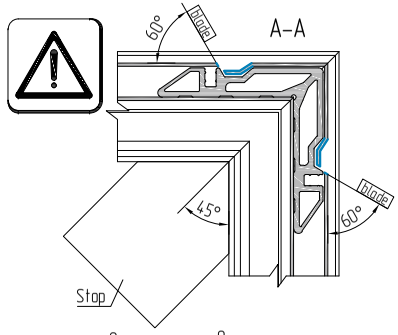

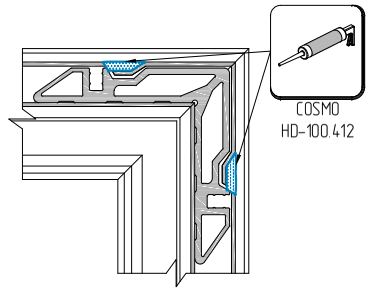

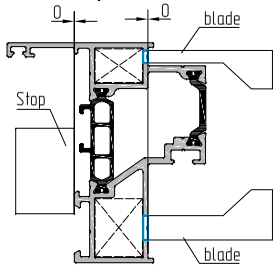

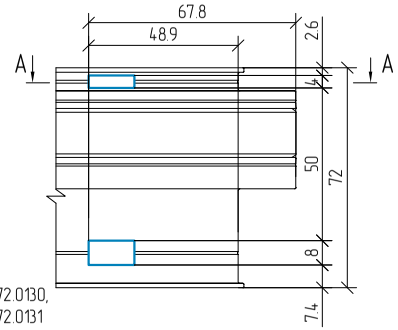

AYPC.W72.0130,
AYPC.W72.0131

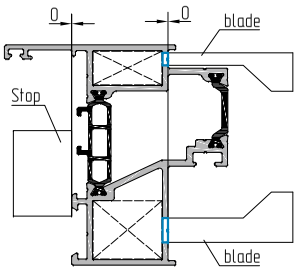

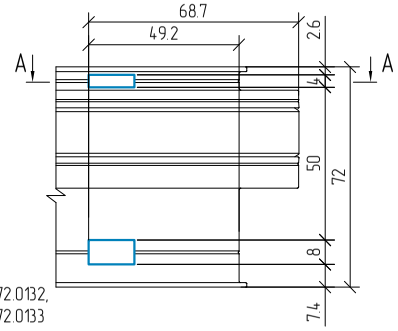

AYPC.W72.0132,
AYPC.W72.0133

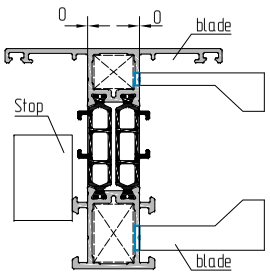

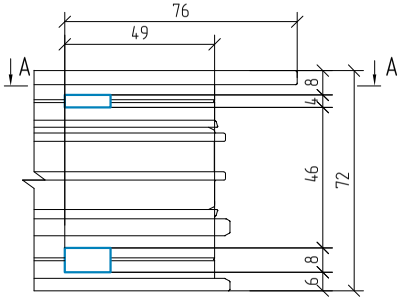

AYPC.W72.0301,
AYPC.W72.0302,
AYPC.W72.0303

Stop is shown schematically and depends on the used tools

Assembly sequence of frame corner connection

1.

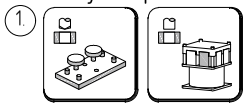

AYPC.W72.1980 PW72.4

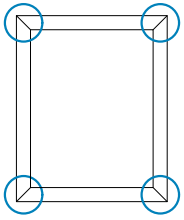

Skip step 1 when doing corner connection by crimping

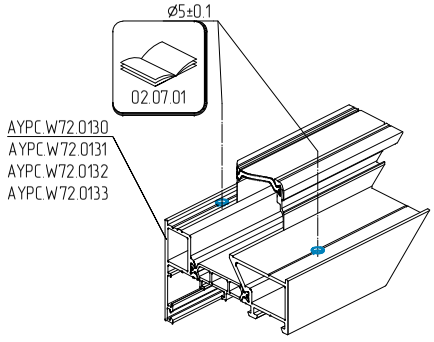

2.

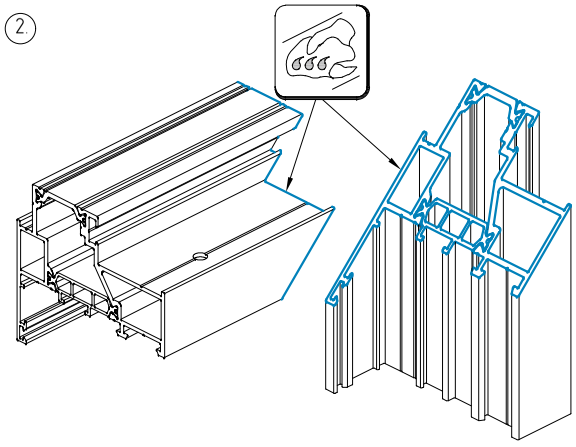

3.

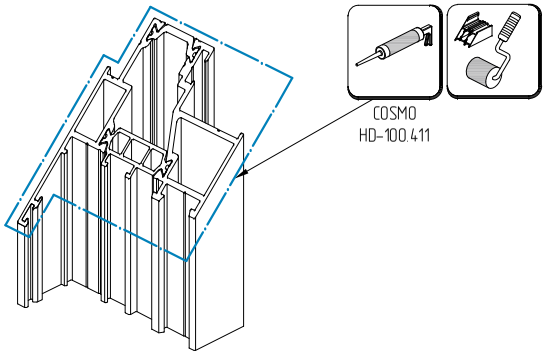

4.

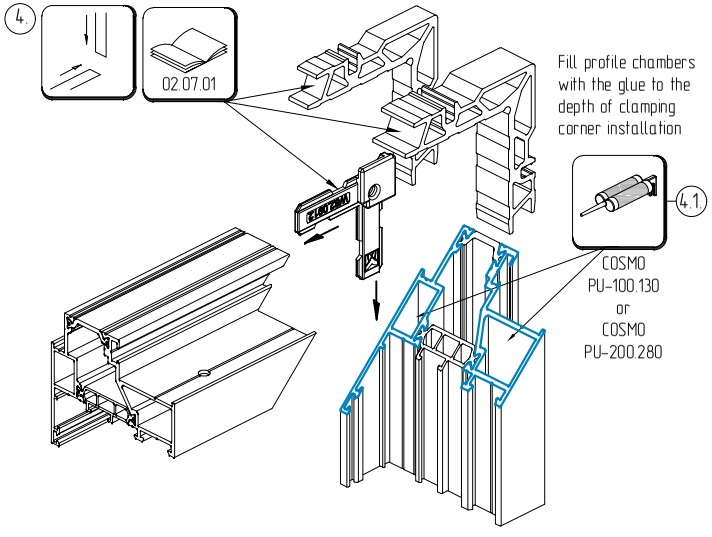

5.

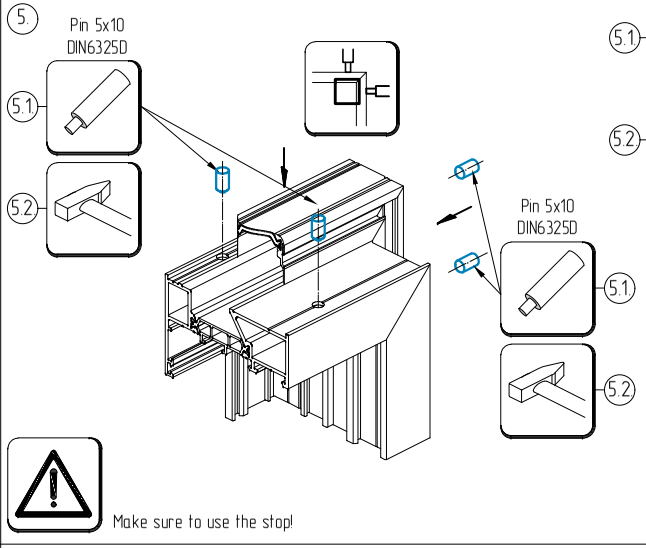

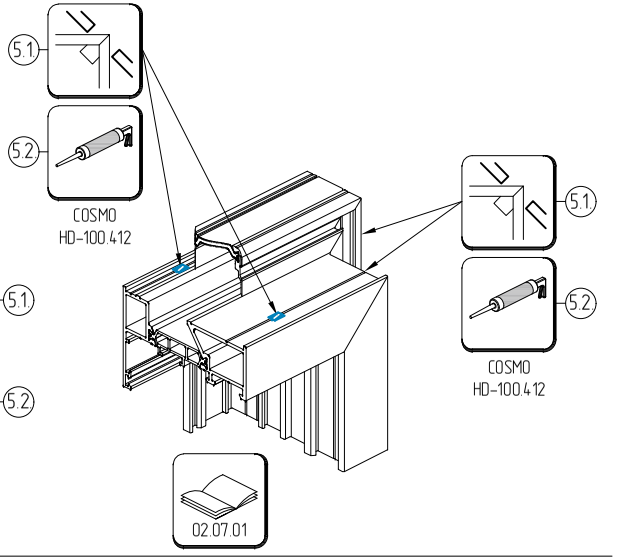

6.

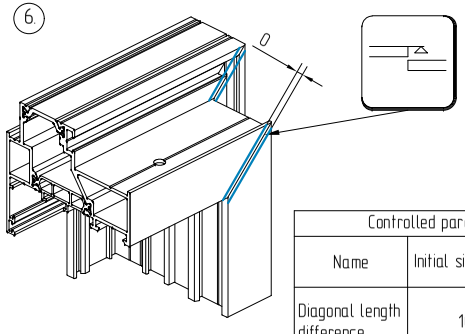

Controlled parameters of assembled item		
Name	Initial size intervals, mm	Limit deviation, mm
Diagonal length difference	≤ 1000 1000–2000 >2000	1.0 2.0 3.0

7.

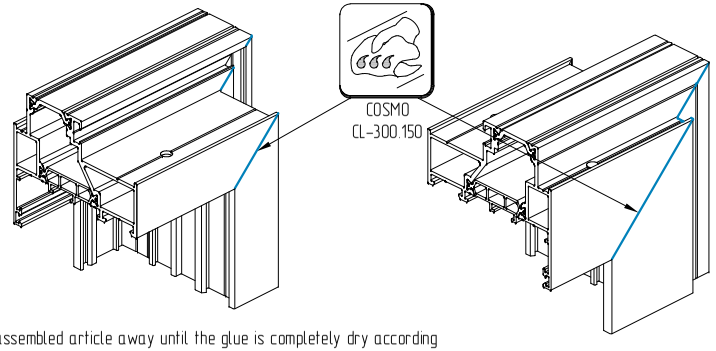

Place the assembled article away until the glue is completely dry according to the recommendations of the glue supplier

Assembly sequence of frame corner connection

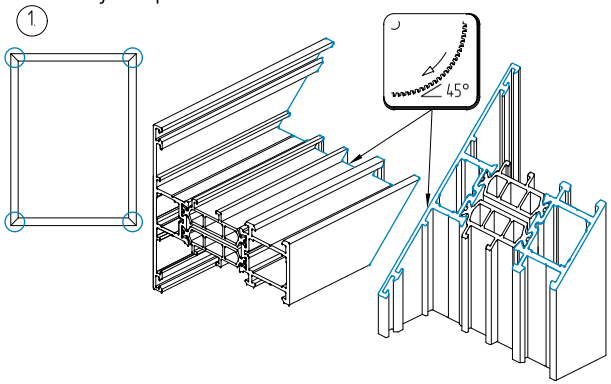

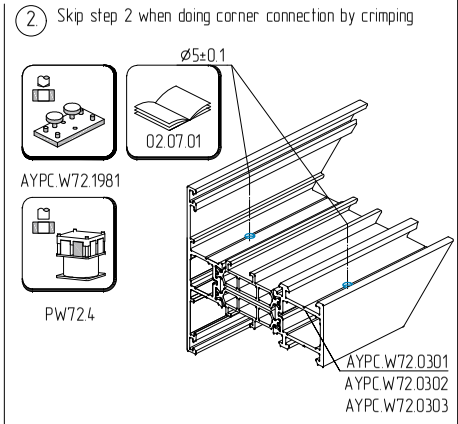

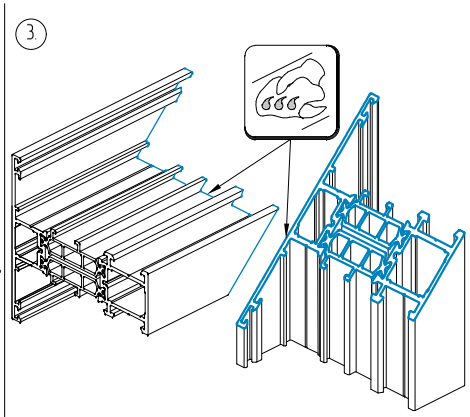

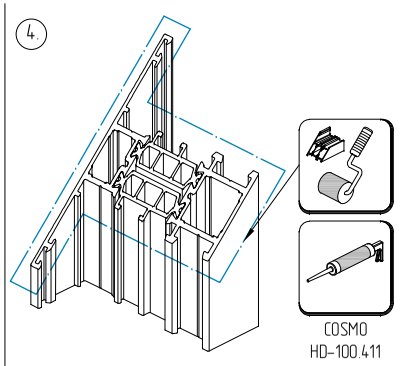

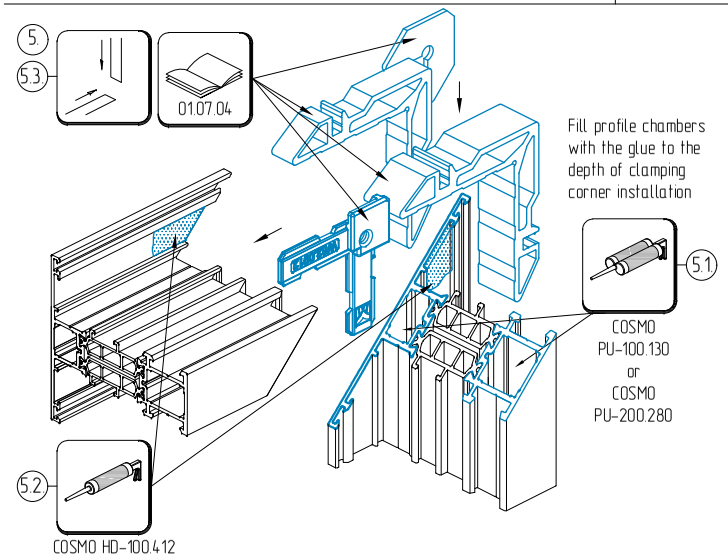

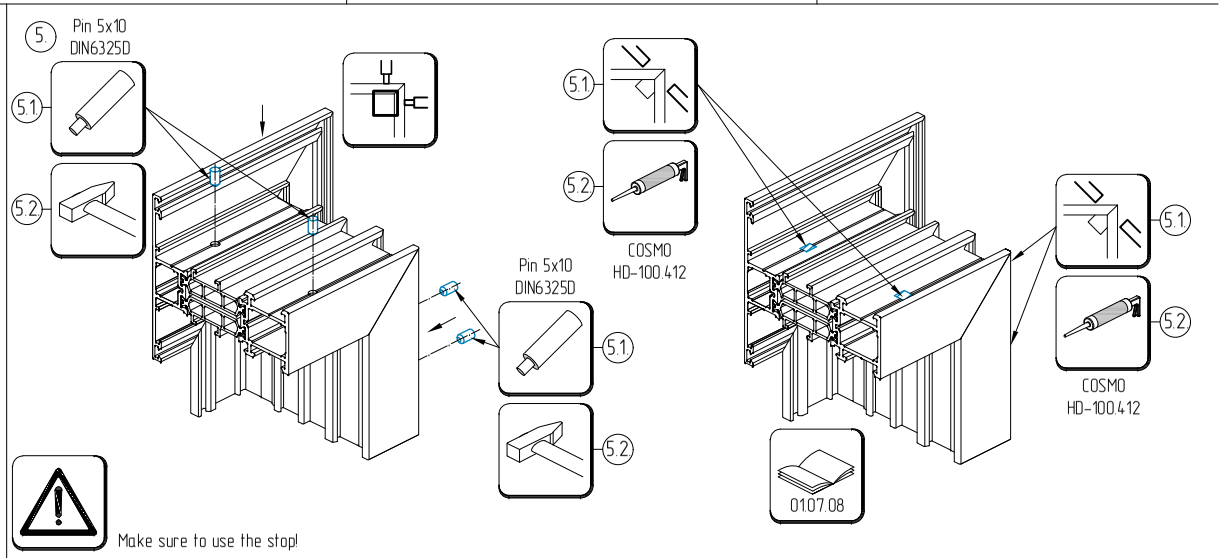

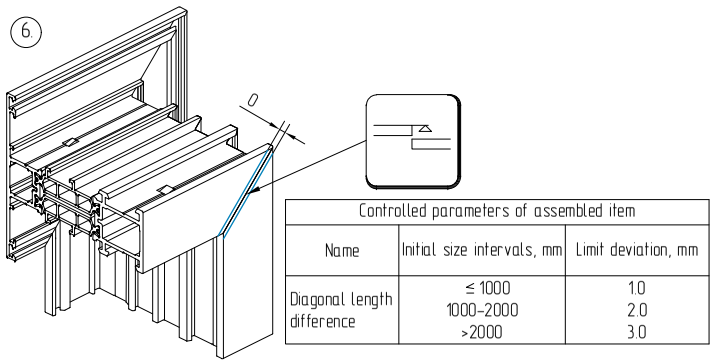

Controlled parameters of assembled item		
Name	Initial size intervals, mm	Limit deviation, mm
Diagonal length difference	≤ 1000 1000–2000 >2000	1.0 2.0 3.0

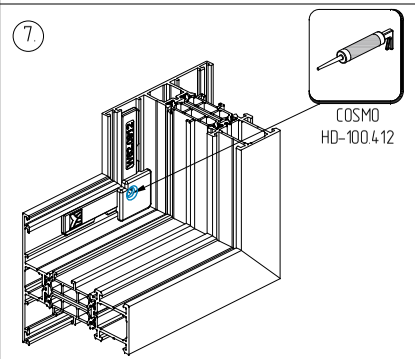

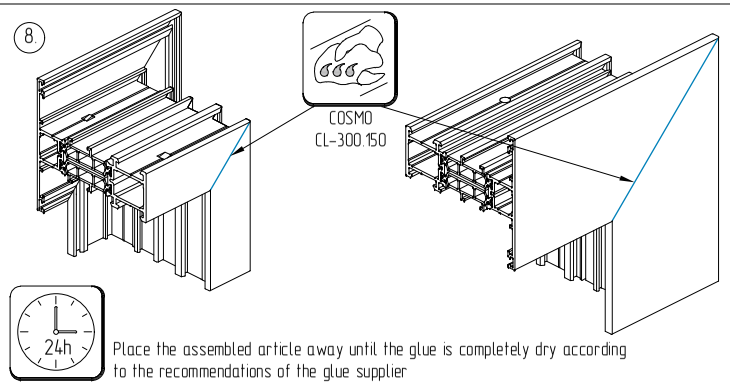

Drainage hole machining in the frame profiles

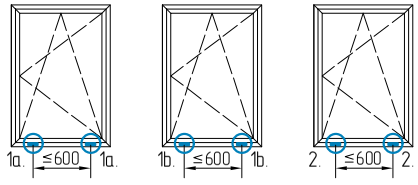

It is prohibited to change the size of the drainage and ventilation holes in the profiles and accessories!

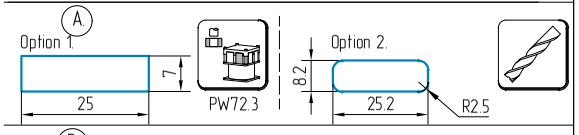

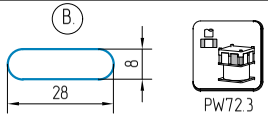

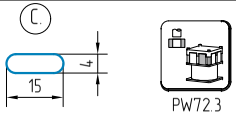

AYPC.C48.0919M-01

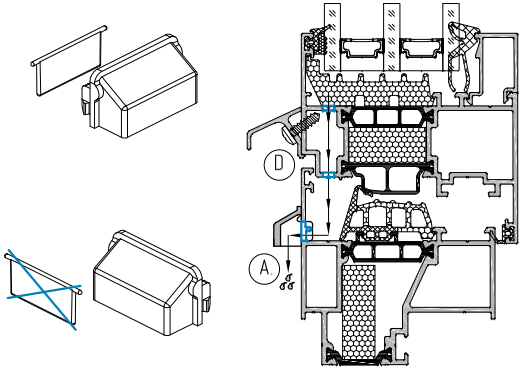

1. Visible drainage system

1a. Frame profile machining for visible drainage system

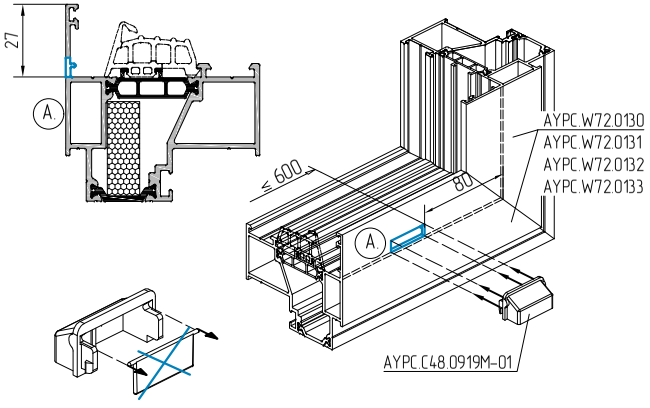

1b. Transom profile machining for visible drainage system

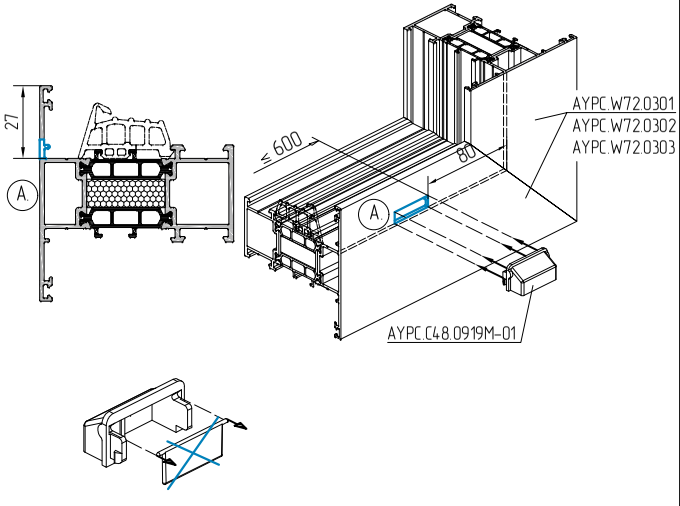

2. Concealed drainage system

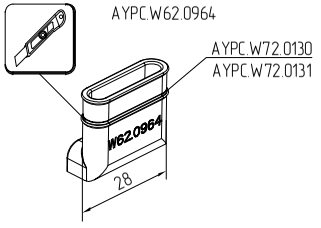

Used only for AYPC.W72.0130...AYPC.W72.0133 profiles

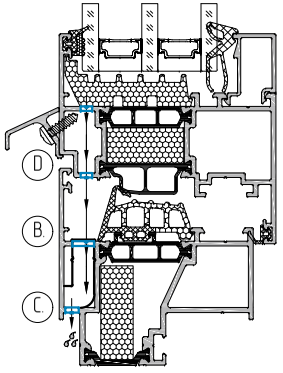

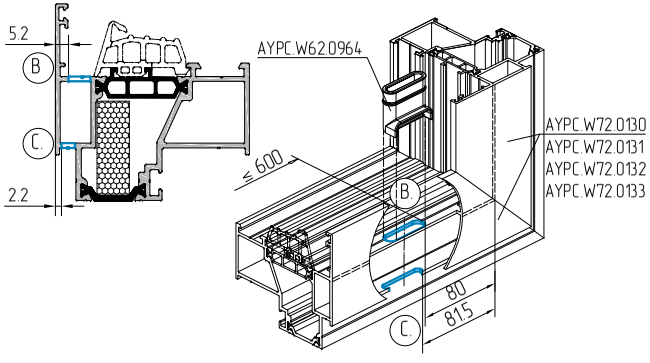

Installation of the window unit made of AYPC.W72.0130, AYPC.W72.0131, AYPC.W72.0132 and AYPC.W72.0133 profiles into the aperture

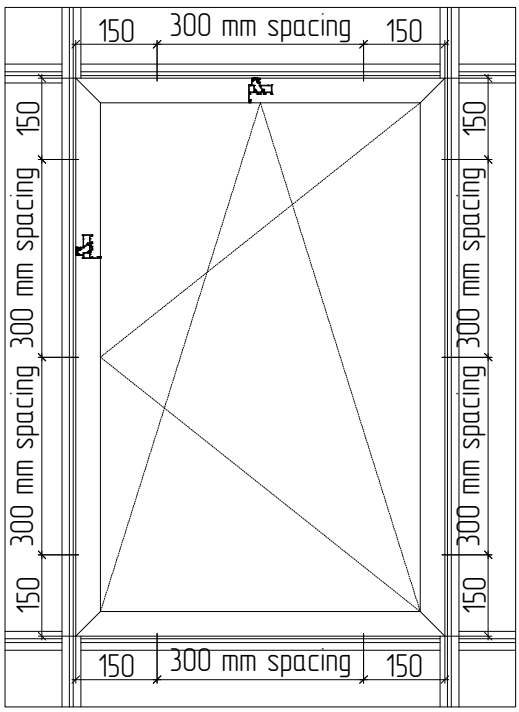

Machining of AYPC.W72.0131 and AYPC.F50.0103 profiles for 4.8x70–A2 DIN7982

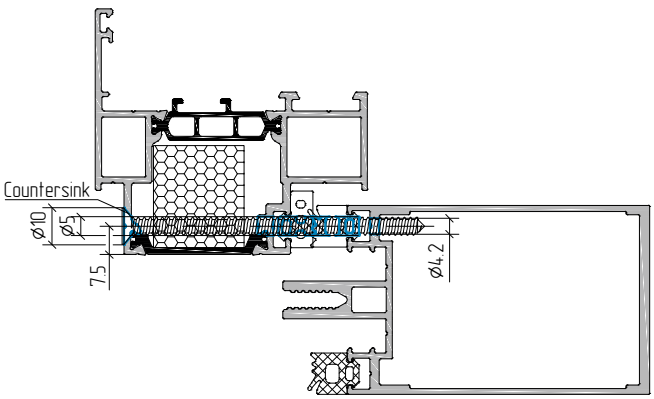

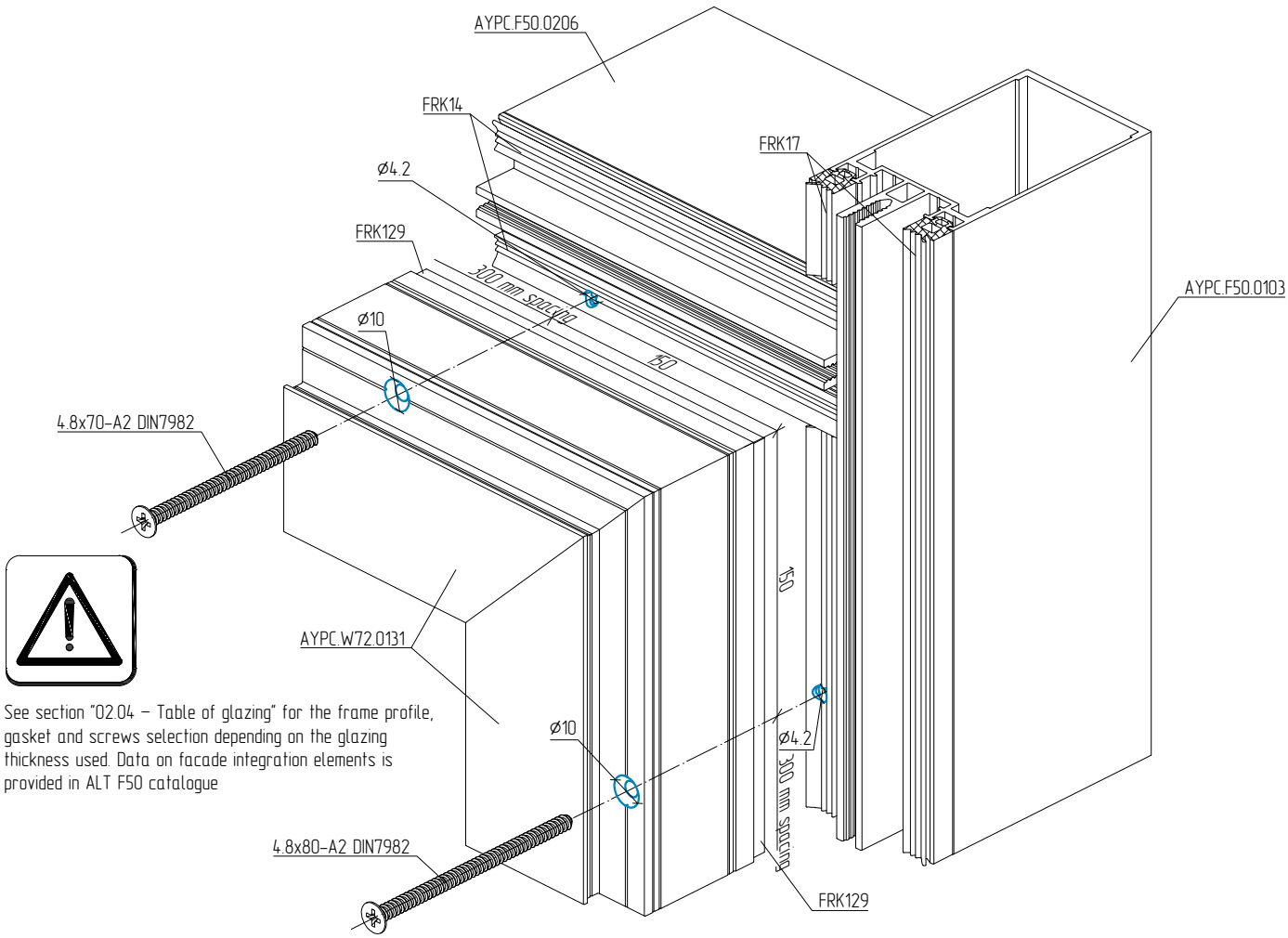

See section "02.04 – Table of glazing" for the frame profile, gasket and screws selection depending on the glazing thickness used. Data on facade integration elements is provided in ALT F50 catalogue

Installation of the window unit into the aperture using transom bar profile

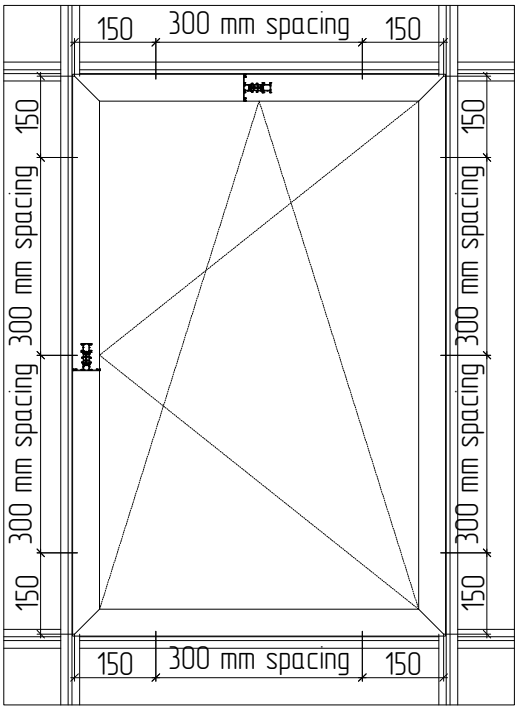

Machining of the transom and mullion/transom profiles for 4.8x19-A2 DIN7981

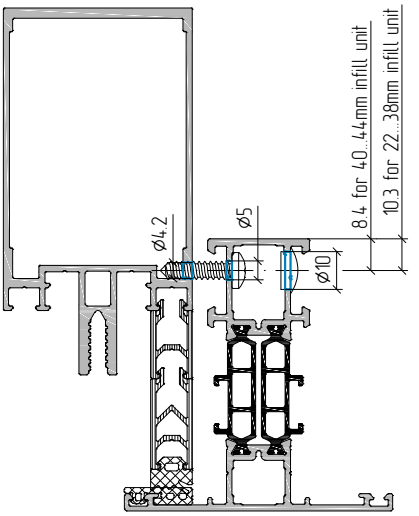

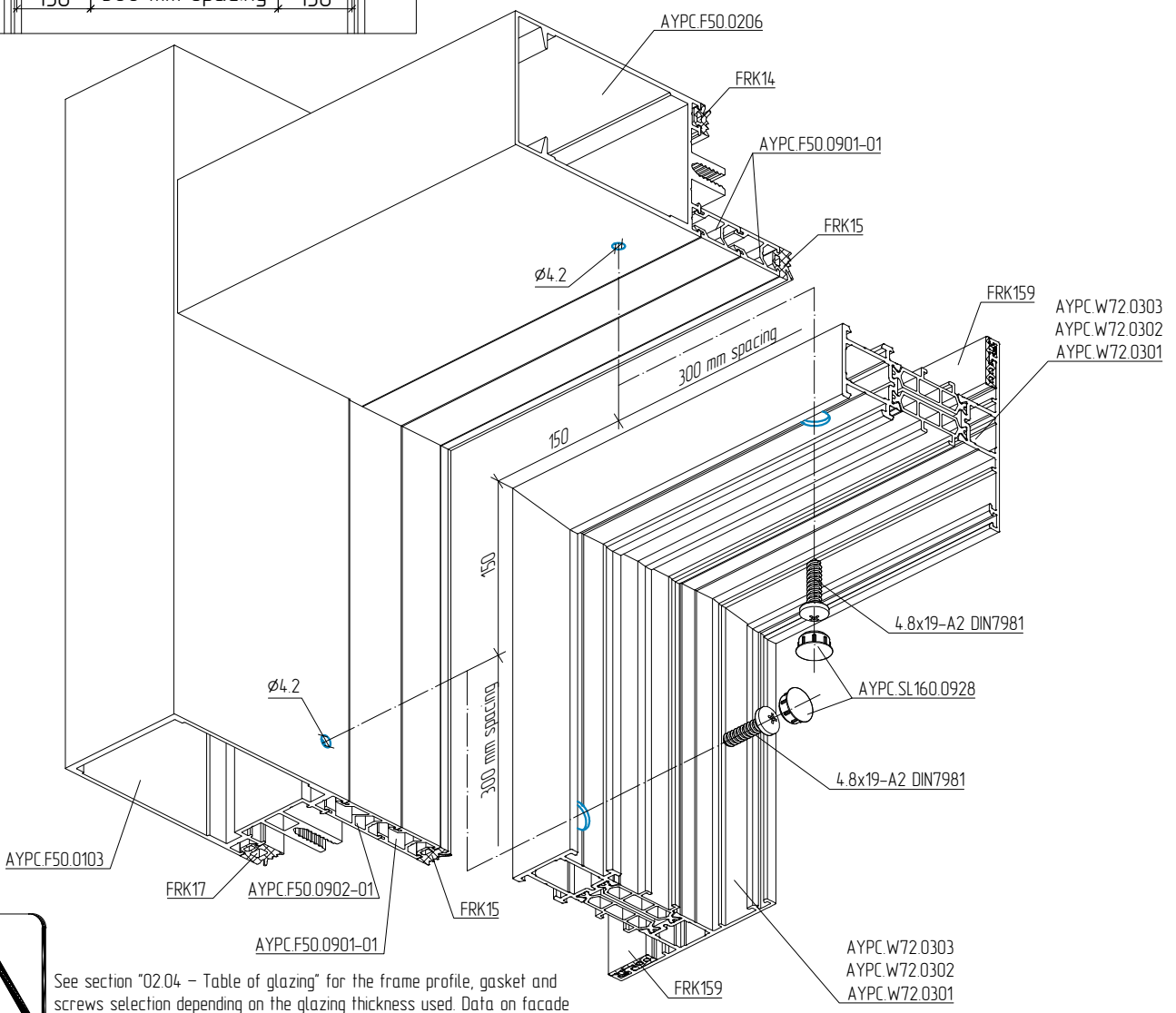

See section "02.04 – Table of glazing" for the frame profile, gasket and screws selection depending on the glazing thickness used. Data on facade integration elements is provided in ALT F50 catalogue

FRK159 gasket installation

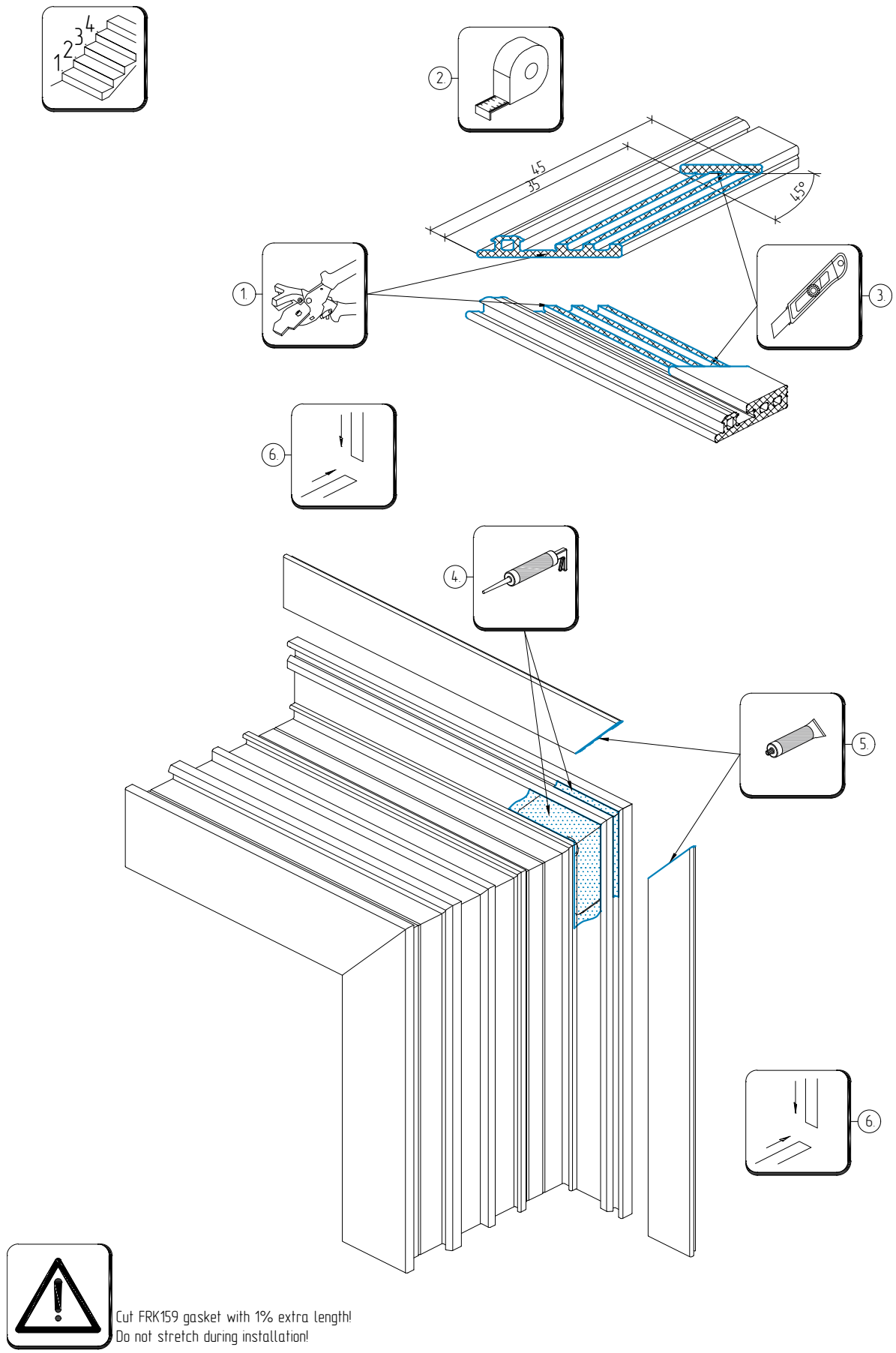

Cut FRK159 gasket with 1% extra length!
Do not stretch during installation!

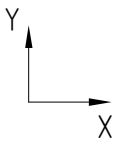

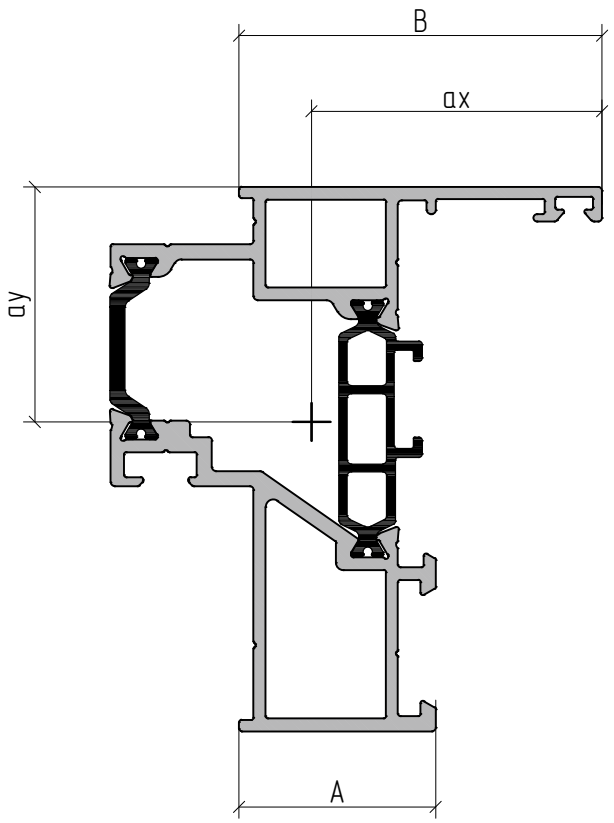

Profile	m, kg/m	S, mm^2	Jx, cm^4	Wx, cm^3	ay, mm	Jy, cm^4	Wy, cm^3	ax, mm	A, mm	B, mm
AYPC.W72.0130	1.6	667.0	22.2	5.4	40.9	11.0	2.9	38.4	26	48
AYPC.W72.0131	1.5	658.3	23.4	5.9	39.5	10.9	2.9	38.2	26	48
AYPC.W72.0132	1.8	746.6	26.5	6.9	40.5	16.9	4.0	42.4	34	56
AYPC.W72.0133	1.7	734.4	27.8	7.1	39.2	16.6	4.0	42.0	34	56

ALUTECH ALTW72
Windows and doors
with thermal break

TERRACE DOOR

03.01.01 System description

03.02.01 Order information

03.03.01 Accessories

03.04.01 Sections and junctions

03.05.01 Examples of standard system calculation

03.06.01 Machining and assemblage

03.07.01 Statics

W72 balcony door with low threshold

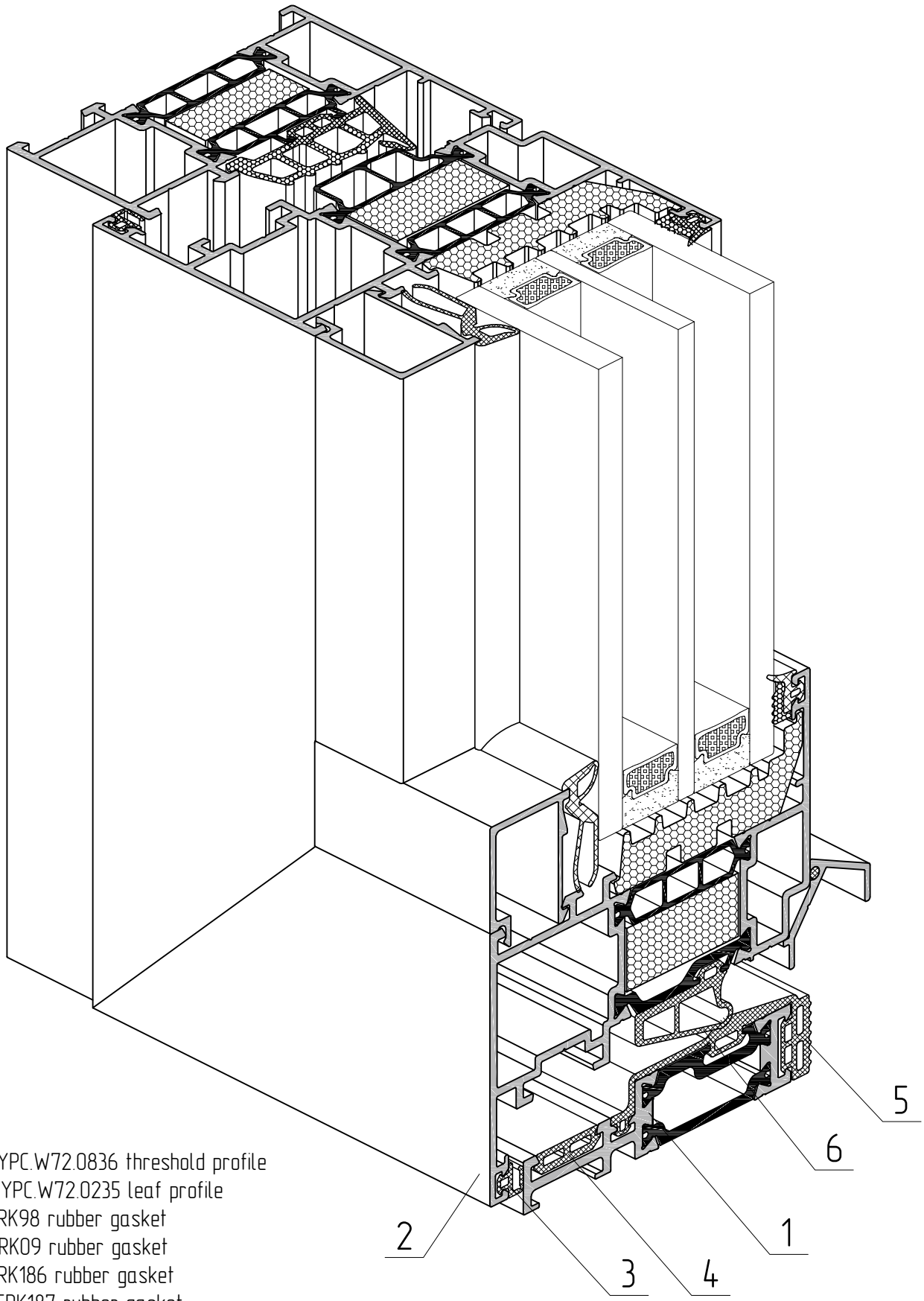

1 – AYPC.W72.0836 threshold profile
2 – AYPC.W72.0235 leaf profile
3 – FRK98 rubber gasket
4 – FRK09 rubber gasket
5 – FRK186 rubber gasket
6 – FRK187 rubber gasket

Article	Name / Drawing	Weight, kg/m	Exterior perimeter, mm	Cross sectional area, mm^2	Code	Profile colour	Bar length, m	Quantity in pack		Weight of a pack	
								pcs	m	net, kg	gross, kg
AYPC.W72.0235E	Leaf profile 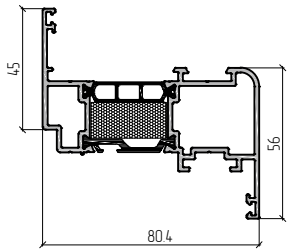	1.72	446.3	719.1	10918621 10918624 10918630 10918631 109186808	RAL9016 RAL8014 RAL8017 RAL9006 A00-D6	6.5	2	13	23.21 23.21 23.21 23.21 22.10	23.62 23.62 23.62 23.62 22.54
AYPC.W72.0235NE	Leaf profile 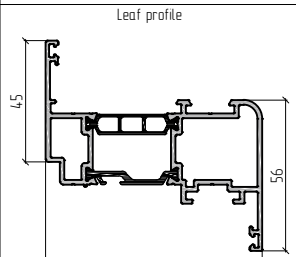	1.71	446.3	719.1	10918700 10918721 10918724 10918730 10918731 109187808	00 RAL9016 RAL8014 RAL8017 RAL9006 A00-D6	6.5	2	13	22.10 23.21 23.21 23.21 23.21 22.10	22.54 23.62 23.62 23.62 23.62 22.54
AYPC.W72.0236E	Leaf profile 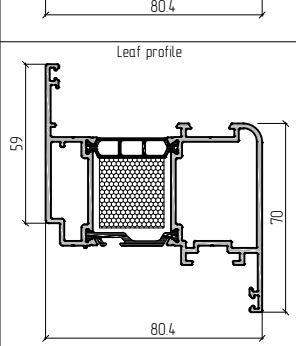	2.09	461.8	851.8	10931921 10931924 10931930 10931931 109319808	RAL9016 RAL8014 RAL8017 RAL9006 A00-D6	6.5	2	13	28.12 28.12 28.12 28.12 26.78	28.68 28.68 28.68 28.68 27.32
AYPC.W72.0236NE	Leaf profile 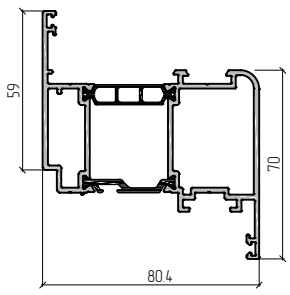	2.07	461.8	851.8	10932000 10932021 10932024 10932030 10932031 109320808	00 RAL9016 RAL8014 RAL8017 RAL9006 A00-D6	6.5	2	13	26.78 28.12 28.12 28.12 28.12 26.78	27.32 28.68 28.68 28.68 28.68 27.32
AYPC.W72.0237E	Leaf profile 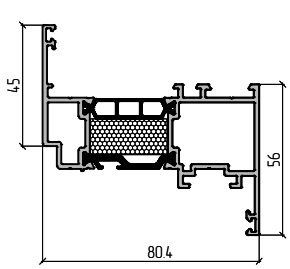	1.75	461.7	726.6	10919021 10919024 10919030 10919031 109190808	RAL9016 RAL8014 RAL8017 RAL9006 A00-D6	6.5	2	13	23.48 23.48 23.48 23.48 22.36	23.95 23.95 23.95 23.95 22.81

Article	Name / Drawing	Weight, kg/m	Exterior perimeter, mm	Cross sectional area, mm²	Code	Profile colour	Bar length, m	Quantity in pack		Weight of a pack	
								pcs	m	net, kg	gross, kg
AYPC.W72.0237NE	Leaf profile 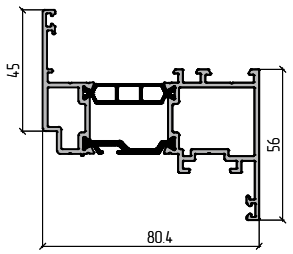	1.74	461.7	726.6	10919100 10919121 10919124 10919130 10919131 109191808	00 RAL9016 RAL8014 RAL8017 RAL9006 A00–D6	6.5	2	13	22.36 23.48 23.48 23.48 23.48 22.36	22.81 23.95 23.95 23.95 23.95 22.81
AYPC.W72.0238E	Leaf profile 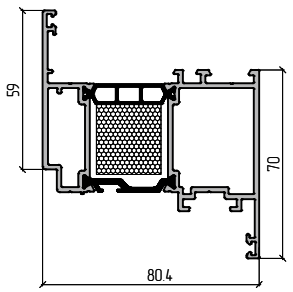	2.11	488.0	859.4	10919221 10919224 10919230 10919231 109192808	RAL9016 RAL8014 RAL8017 RAL9006 A00–D6	6.5	2	13	28.3 28.3 28.3 28.3 27.5	29.1 29.1 29.1 29.1 28.3
AYPC.W72.0238NE	Leaf profile 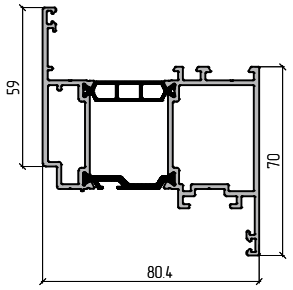	2.09	488.0	859.4	10919300 10919321 10919324 10919330 10919331 109193808	00 RAL9016 RAL8014 RAL8017 RAL9006 A00–D6	6.5	2	13	27.5 28.3 28.3 28.3 28.3 27.5	28.3 29.1 29.1 29.1 29.1 28.3
AYPC.W72.0836E	Threshold profile 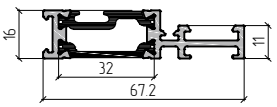	0.90	254.5	416.3	10968600 109686808	00 A00–D6	6.5	4	26	22.96 22.96	23.42 23.42
AYPC.W62.0613	Drip bar 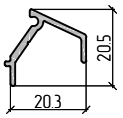	0.18	90.7	66.9	10871900 10871921 10871924 10871930 10871931 108719808	00 RAL9016 RAL8014 RAL8017 RAL9006 A00–D6	6.5	12	78	15.14 15.14 15.14 15.14 14.04	15.54 15.54 15.54 15.54 14.48

Image	Code	Article	Application
	10210800	FRK09	EPDM rubber gasket. Quantity in pack – 225 m
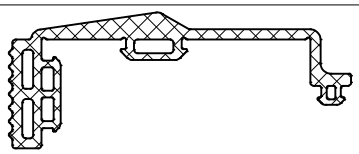	10940000	FRK186	EPDM rubber gasket. Quantity in pack – 50 m
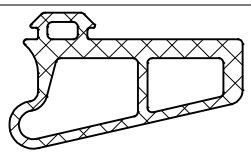	10940100	FRK187	EPDM rubber gasket. Quantity in pack – 50 m
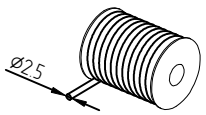	12620500	AYPC.SL160.0948	EPDM foamed rubber gasket. Quantity in pack – 100 m
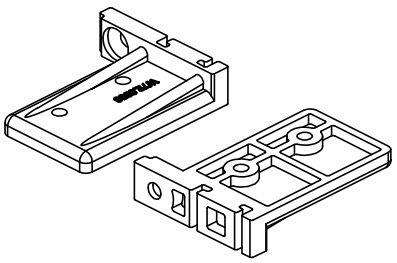	10918800	AYPC.W72.0936	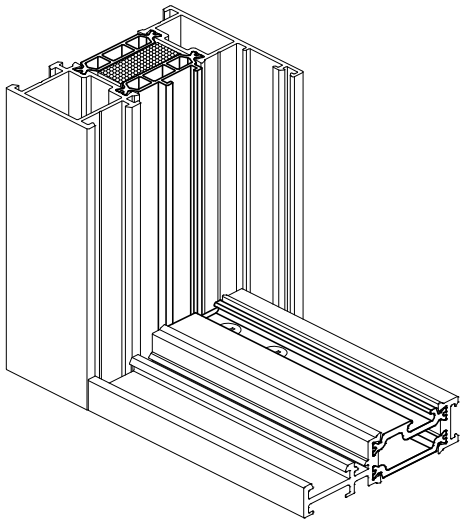
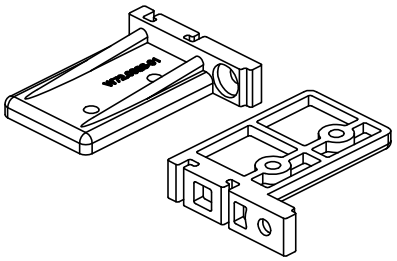			Threshold plug kit. Quantity in pack – 100 kits
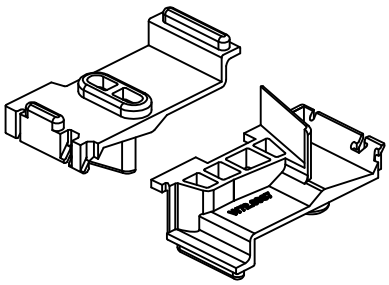	10919600	AYPC.W72.0937	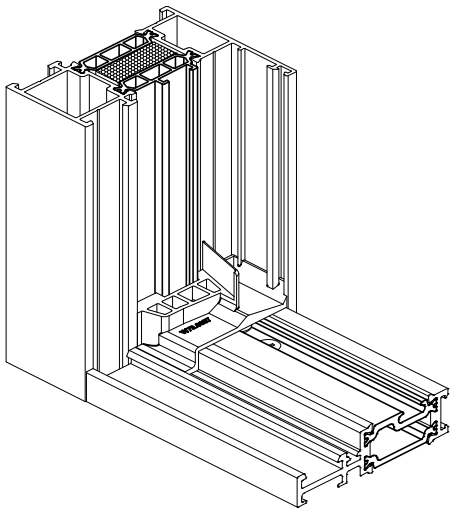
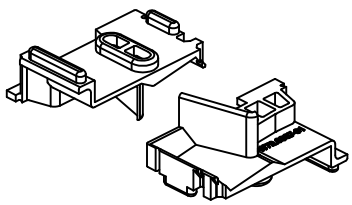			Threshold collar kit. Quantity in pack – 100 kits

Image	Code	Article	Application
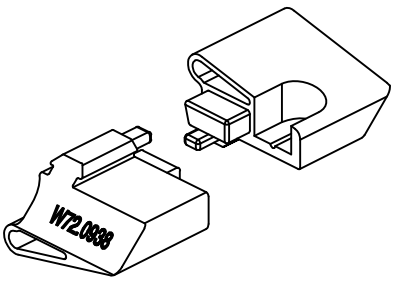	10922700	AYPC.W72.0938	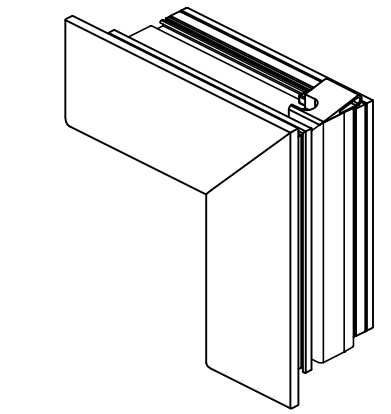 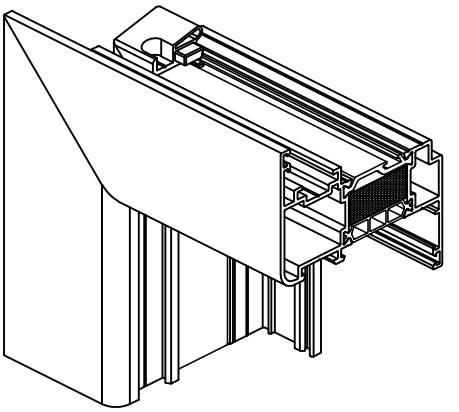 Leaf collar kit. Quantity in pack – 100 kits
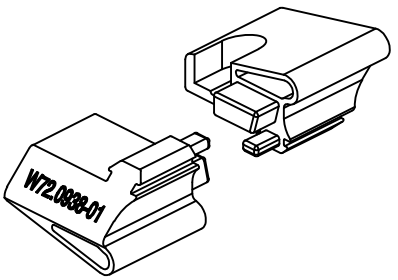			
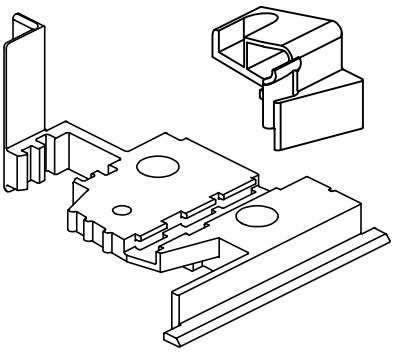	10923000	AYPC.W72.0941	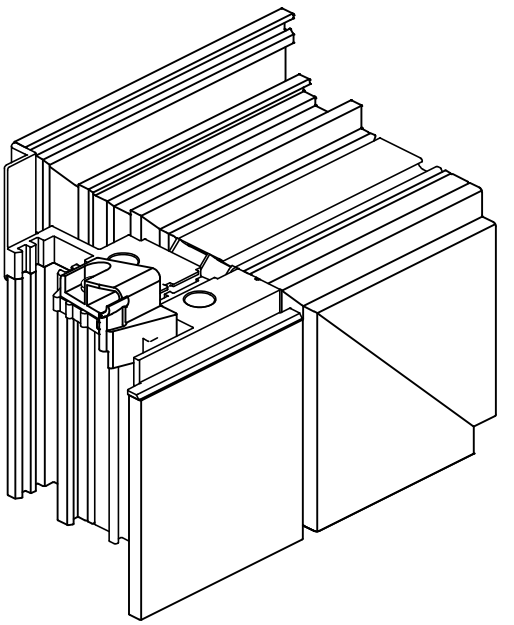
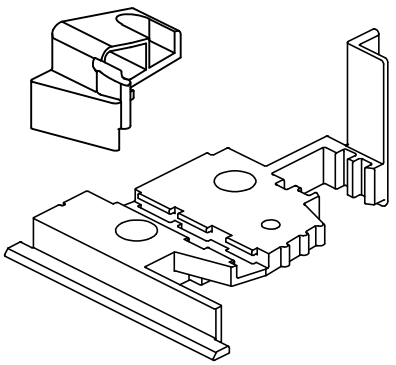	10923100	AYPC.W72.0941-01	Double casement collar kit. Quantity in pack – 20 kits

<table>
<tr><th>Image</th><th>Code</th><th>Article</th><th>Application</th></tr>
<tr><td> 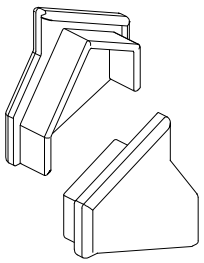 </td><td>10840800</td><td>AYPC.W62.0990
Colour: black</td><td rowspan="2"> 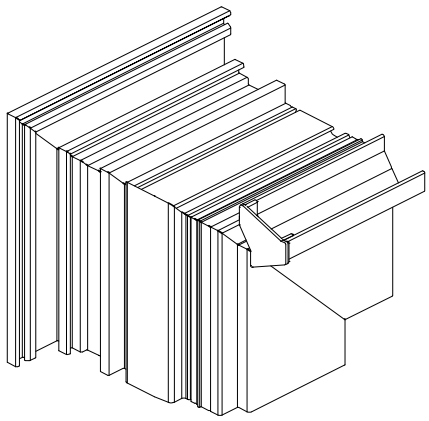 </td></tr>
<tr><td> 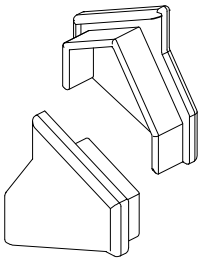 </td><td>10840801</td><td>AYPC.W62.0990
Colour: white</td></tr>
<tr><td colspan="3">Drain plugs kit. Quantity in pack – 30 kits</td></tr>
<tr><td rowspan="3"> 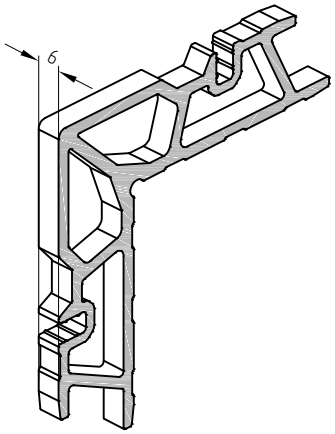
</td><td rowspan="3">10812300</td><td rowspan="3">AYPC.W62.0953</td><td>Corner plug made from AYPC.W50.0703 profile. Quantity in pack – 200 pcs</td></tr>
<tr><td> 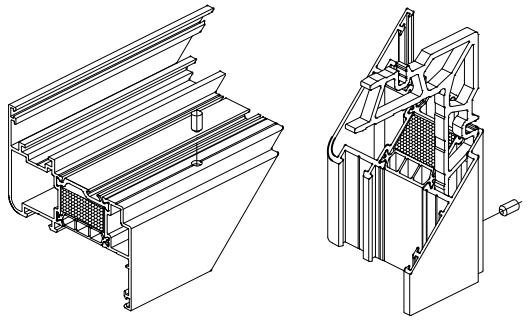 </td></tr>
<tr><td>For leaf profiles
AYPC.W72.0235, AYPC.W72.0237</td></tr>
<tr><td rowspan="3"> 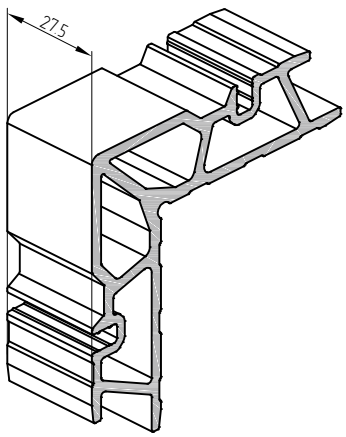
</td><td rowspan="3">10812600</td><td rowspan="3">AYPC.W62.0953-03</td><td>Corner plug made from AYPC.W50.0703 profile. Quantity in pack – 40 pcs</td></tr>
<tr><td> 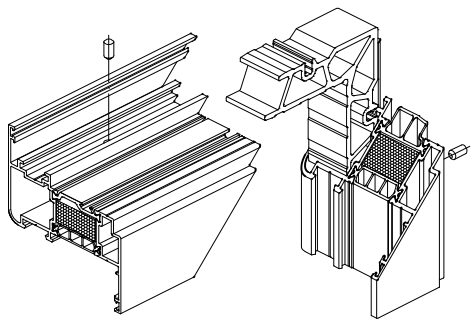 </td></tr>
<tr><td>For leaf profiles
AYPC.W72.0235, AYPC.W72.0237</td></tr>
</table>

Image	Code	Article	Application
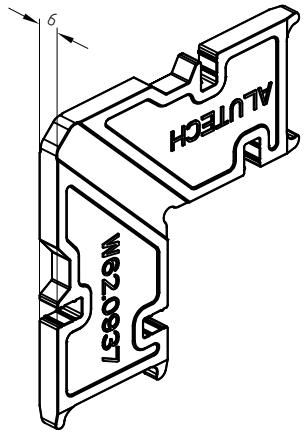	10829900	AYPC.W62.0937	Clamping corner. Quantity in pack – 60 pcs 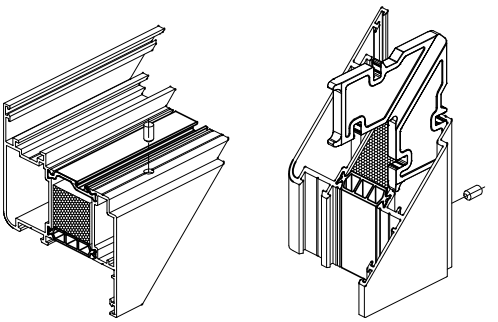 For leaf profiles AYPC.W72.0236, AYPC.W72.0238
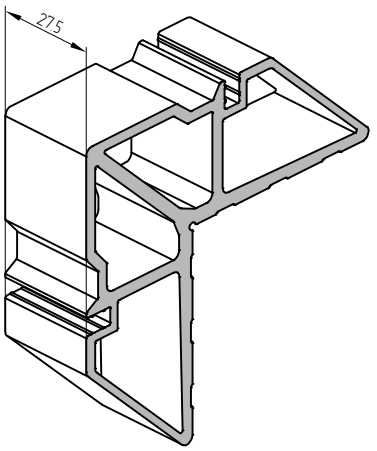	10815000	AYPC.W62.0954-05	Clamping corner made from AYPC.C48.0704 profile. Quantity in pack – 50 pcs 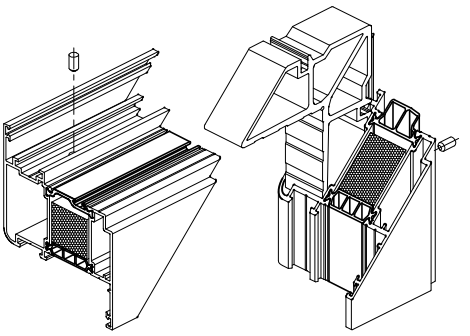 For leaf profiles AYPC.W72.0236, AYPC.W72.0238

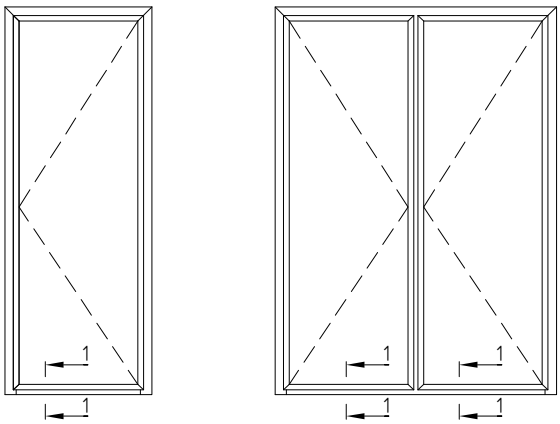

1–1

AYPC.W72.0836 + AYPC.W72.0235

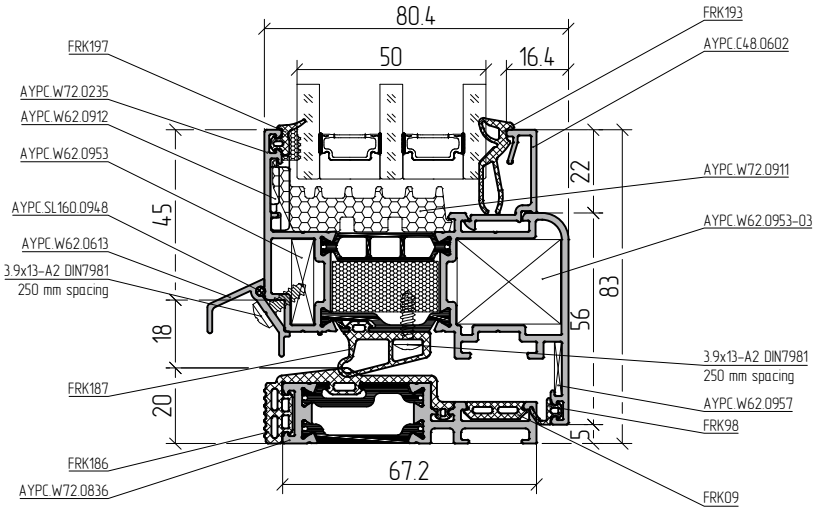

AYPC.W72.0836 + AYPC.W72.0236

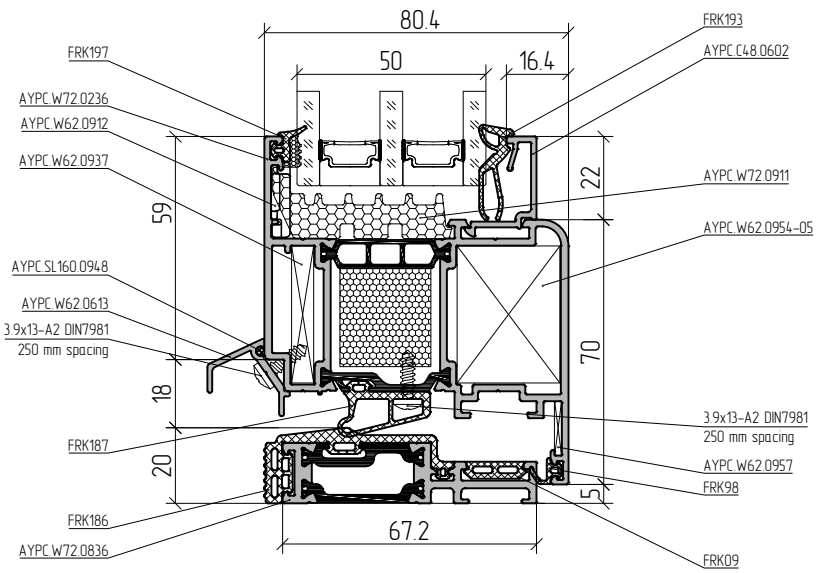

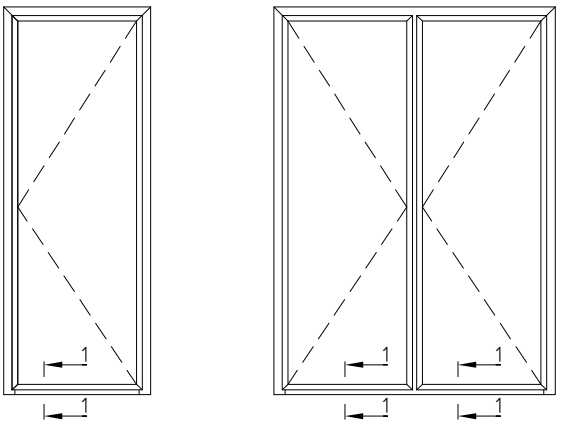

1–1

AYPC.W72.0836 + AYPC.W72.0237

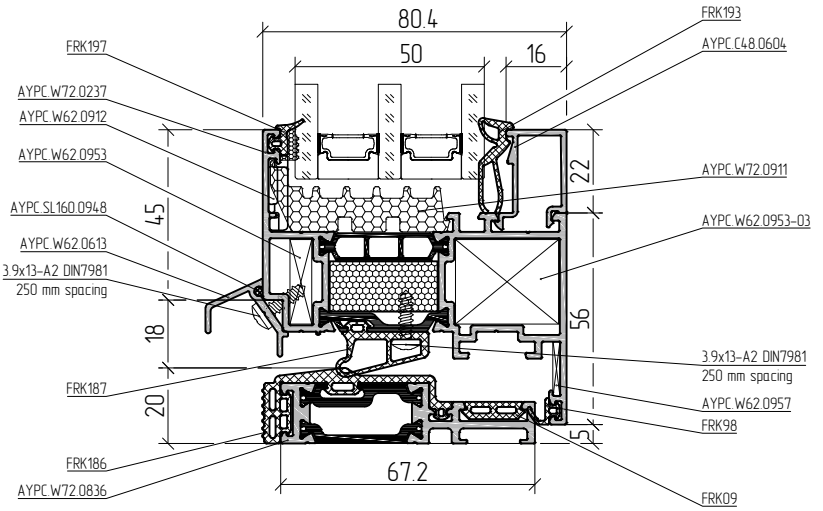

AYPC.W72.0836 + AYPC.W72.0238

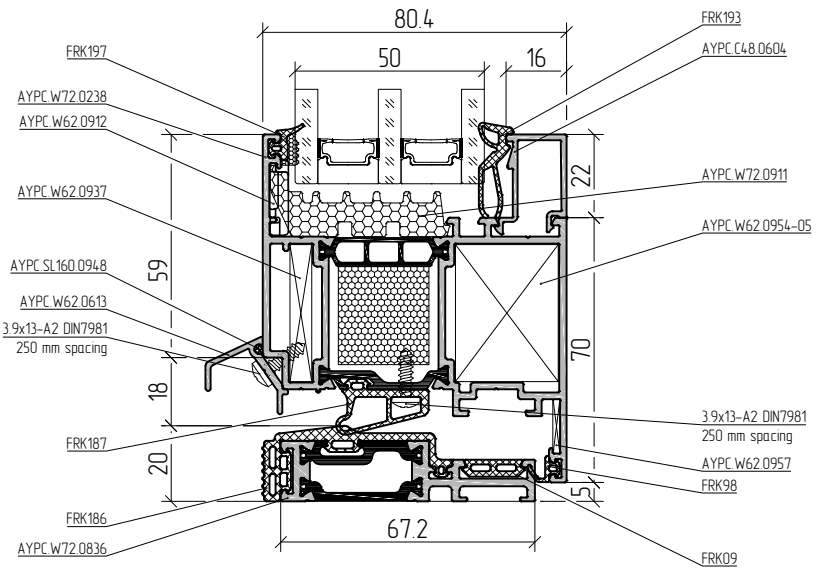

ALUTECH PROFILE SYSTEMS

Example of balcony door calculation

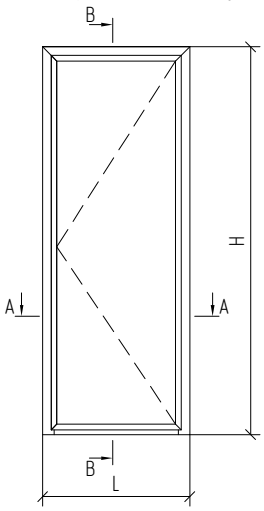

B–B

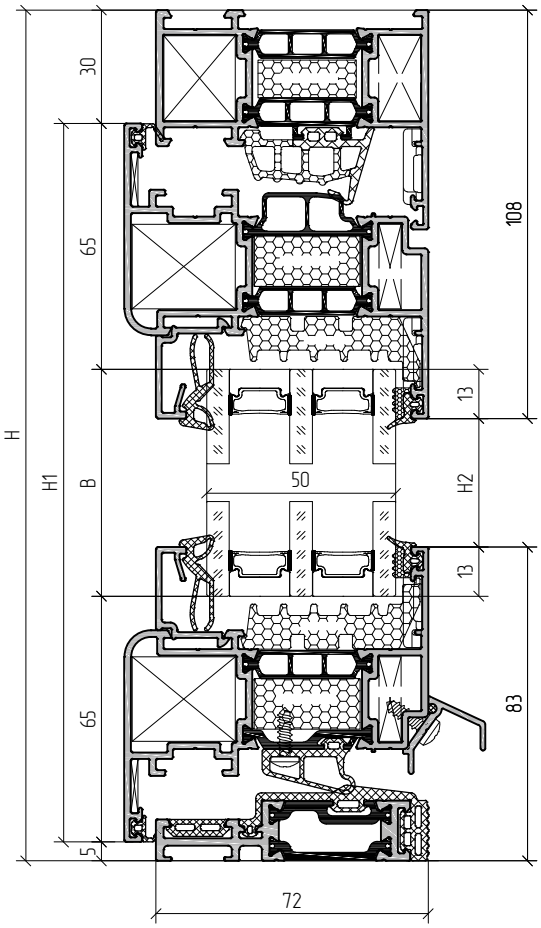

A–A

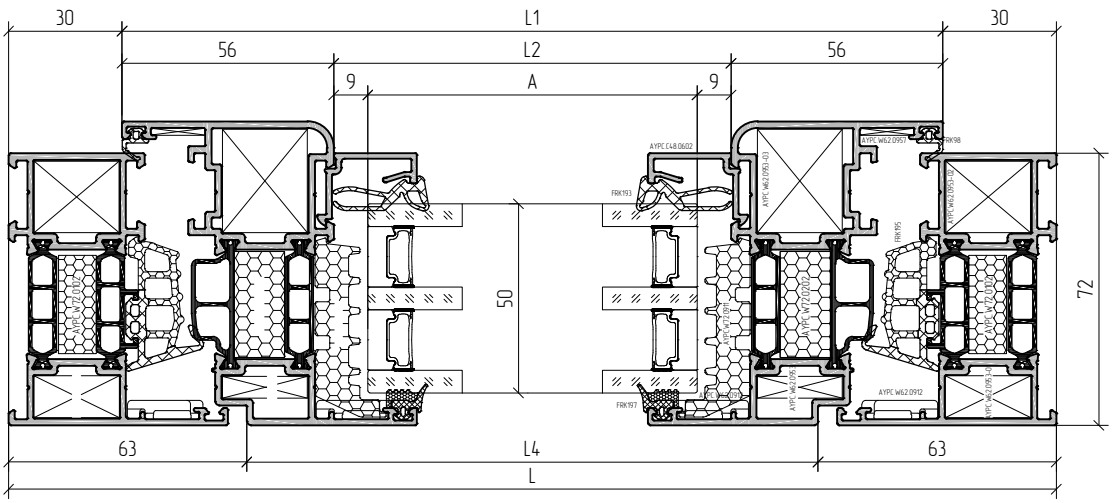

50 mm infill unit	
A=L1–130; B=H1–130	1

Example of balcony door calculation

Article	Name / Image		L	1....
Profile				
AYPC.W72.0102	Frame profile		L	1
			H	1
			H	1
AYPC.W72.0202	Leaf profile		L1=L-60	1
			H1=H-35	2
AYPC.W72.0235	Leaf profile		L1=L-60	1

Article	Name / Image		L	1....
Profile				
AYPC.W72.0836	Threshold profile		L3=L-72	1
AYPC.W62.0613	Drip bar		L4=L-130	1
AYPC.C48.0612 (AYPC.W62.0607)	Rod profile		-	
AYPC.C48.0602	Glass bead profile		L2=L1-112	2
			H2=H1-156	2

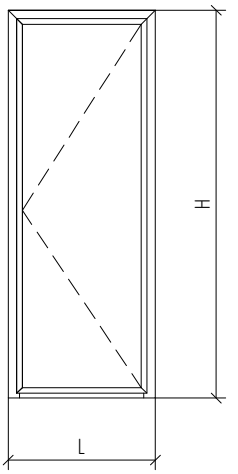

Article	Name / Image		1....
Accessories			
FRK195	Rubber gasket	L1x1+H1x2	1
FRK196	Rubber corner		2
FRK197	Rubber gasket	Ax2+Bx2	1
FRK179	Rubber corner		4
FRK09	Rubber gasket	L3	1
FRK186	Rubber gasket	L3-22x2	1
FRK187	Rubber gasket	L1	1
FRK193	Rubber gasket	Ax2+Bx2	1
FRK98	Rubber gasket	L1x2+H1x2	1
FRK101	Rubber gasket	Lx1+Hx2	1*
AYPC.SL160.0948	Rubber gasket	L4=L-130	1
AYPC.W72.0911	Seam sealing	Ax2+Bx2-4x100**	1
AYPC.W62.0917	Bearing support		4
100x56x1(3)	Leveling support		4(4)
AYPC.W62.0953	Clamping corner		4
AYPC.W62.0953-01	Clamping corner		2
AYPC.W62.0953-02	Clamping corner		2
AYPC.W62.0953-03	Clamping corner		4
AYPC.W62.0912	Plastic corner		6
AYPC.W62.0957	Leveling corner		4
3.9x13-A2 DIN7981	Self-tapping screw		(L4/250)x2+2
AYPC.W72.0936	Threshold plug kit		1 kit
AYPC.W72.0937	Threshold collar kit		1 kit
AYPC.W72.0938	Leaf end seal kit		1 kit
AYPC.W62.0990	Kit of drip bar end plugs		1 kit
3.9x9.5-A2 DIN7982	Self-tapping screw		6
Pin 5x10	Pin 5x10 DIN6325D		24

1. Choose the articles of glass bead profiles and rubber gaskets depending on infill unit thickness (see section 01.04 – Table of glazing).
The dimensions and quantity of AYPC.C48.0612 (AYPC.W62.0607) rod profile are determined by the type of hardware and leaf dimensions (L1 and H1).
3. AYPC.W62.0607 rod profile is only used with ROTO hardware kits.
* See section 01.07 – Profiles machining and assemblage (page 01.07.15 and page 01.07.40).
** The quantity of removed AYPC.W72.0911 seam sealing depends on the type of opening and quantity of bearing supports

Example of balcony door calculation

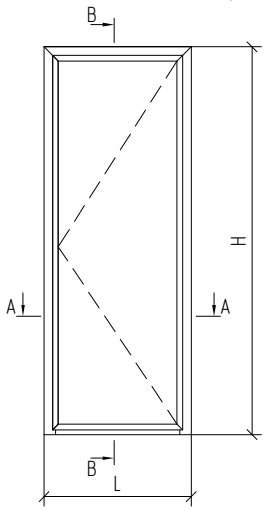

B–B

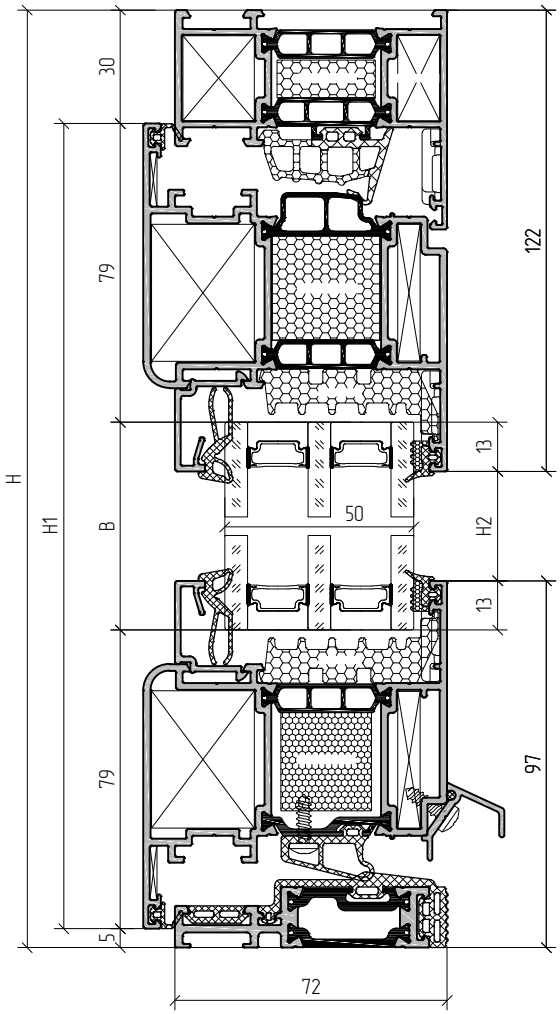

A–A

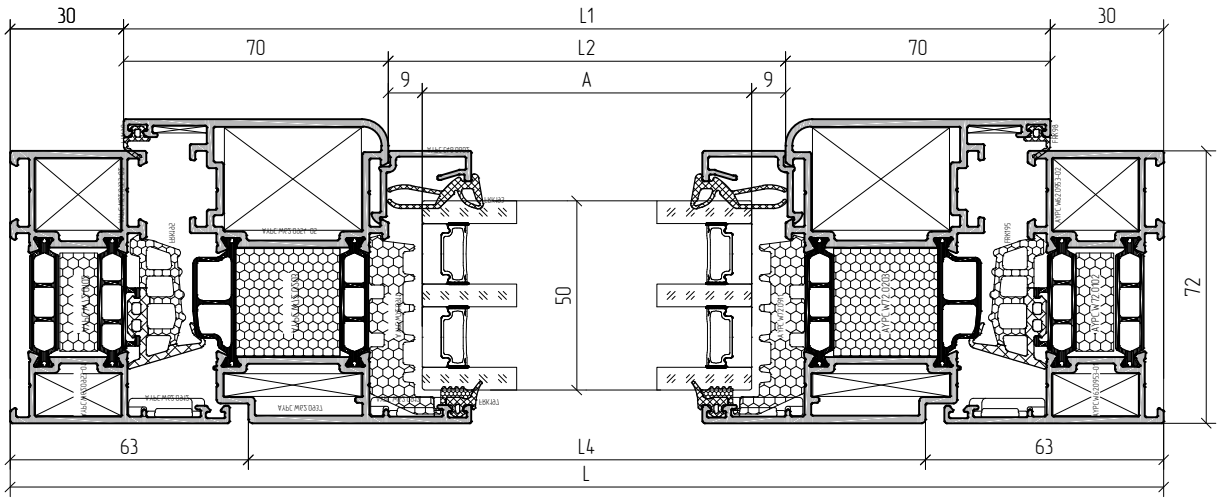

50 mm infill unit	
A=L1–158; B=H1–158	1

Example of balcony door calculation

Article	Name / Image		L	1....
Profile				
AYPC.W72.0102	Frame profile		L	1
			H	1
			H	1
AYPC.W72.0203	Leaf profile		L1=L-60	1
			H1=H-35	2
AYPC.W72.0236	Leaf profile		L1=L-60	1

Article	Name / Image		L	1....
Profile				
AYPC.W72.0836	Threshold profile		L3=L-72	1
AYPC.W62.0613	Drip bar		L4=L-130	1
AYPC.C48.0612 (AYPC.W62.0607)	Rod profile		-	
AYPC.C48.0602	Glass bead profile		L2=L1-140	2
			H2=H1-184	2

Article	Name / Image	L	1....
Accessories			
FRK195	Rubber gasket	L1x1+H1x2	1
FRK196	Rubber corner		2
FRK197	Rubber gasket	Ax2+Bx2	1
FRK179	Rubber corner		4
FRK09	Rubber gasket	L3	1
FRK186	Rubber gasket	L3-22x2	1
FRK187	Rubber gasket	L1	1
FRK193	Rubber gasket	Ax2+Bx2	1
FRK98	Rubber gasket	L1x2+H1x2	1
FRK101	Rubber gasket	Lx1+Hx2	1*
AYPC.SL160.0948	Rubber gasket	L4=L-130	1
AYPC.W72.0911	Seam sealing	Ax2+Bx2-4x100**	1
AYPC.W62.0917	Bearing support		4
100x56x1(3)	Leveling support		4(4)
AYPC.W62.0937	Clamping corner		4
AYPC.W62.0953-01	Clamping corner		2
AYPC.W62.0953-02	Clamping corner		2
AYPC.W62.0954-05	Clamping corner		4
AYPC.W62.0912	Plastic corner		6
AYPC.W62.0957	Leveling corner		4
3.9x13-A2 DIN7981	Self-tapping screw		(L4/250)x2+2
AYPC.W72.0936	Threshold plug kit		1 kit
AYPC.W72.0937	Threshold collar kit		1 kit
AYPC.W72.0938	Leaf collar kit		1 kit
AYPC.W62.0990	Kit of drip bar end plugs		1 kit
3.9x9.5-A2 DIN7982	Self-tapping screw		6
Pin 5x10	Pin 5x10 DIN6325D		24

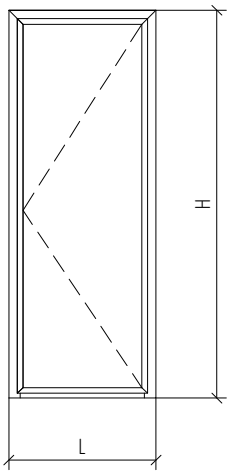

1. Choose the articles of glass bead profiles and rubber gaskets depending on infill unit thickness (see section 01.04 – Table of glazing).
The dimensions and quantity of AYPC.C48.0612 (AYPC.W62.0607) rod profile are determined by the type of hardware and leaf dimensions (L1 and H1).
3. AYPC.W62.0607 rod profile is only used with ROTO hardware kits.
* See section 01.07 – Profiles machining and assemblage (page 01.07.15 and page 01.07.40).
** The quantity of removed AYPC.W72.0911 seam sealing depends on the type of opening and quantity of bearing supports

Example of balcony door with double casement calculation

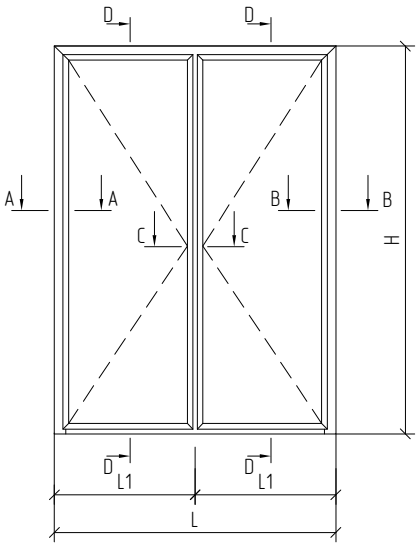

A–A

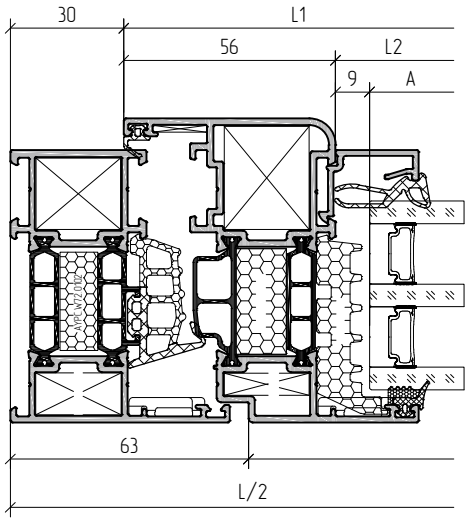

C–C

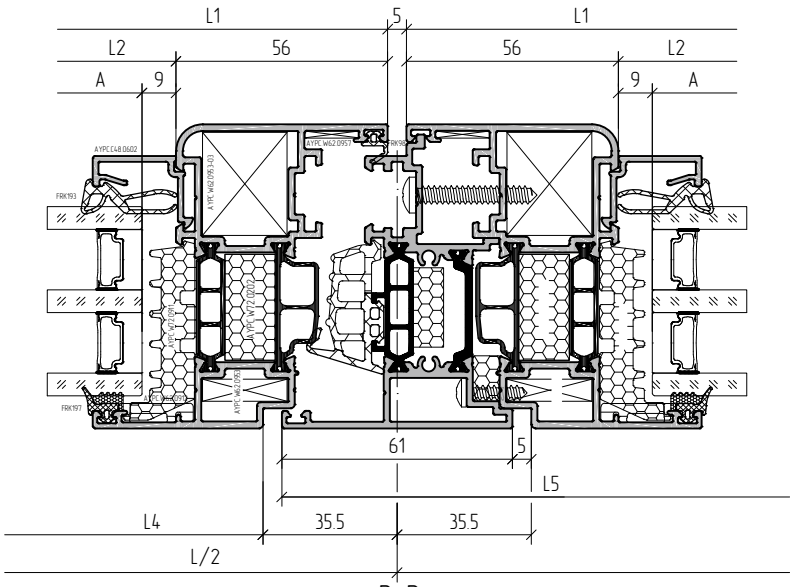

D–D

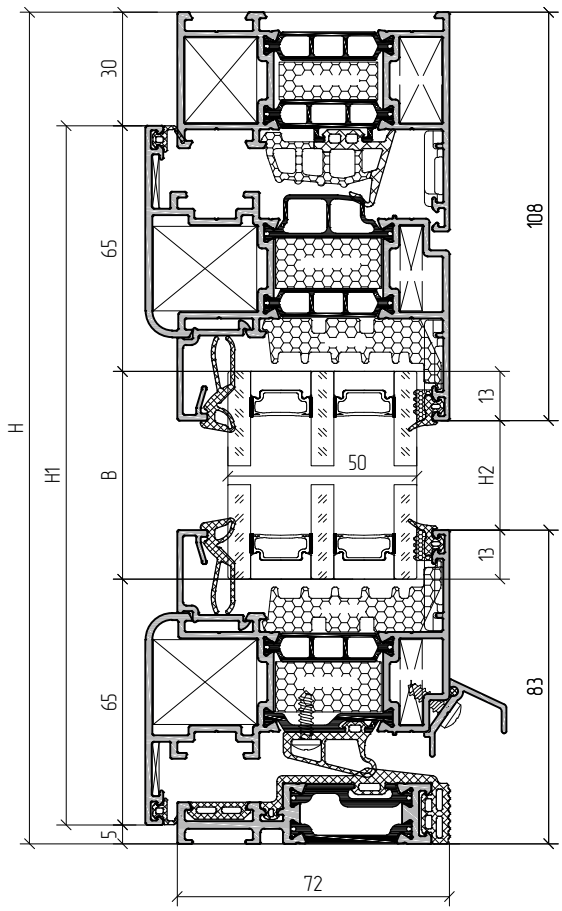

B–B

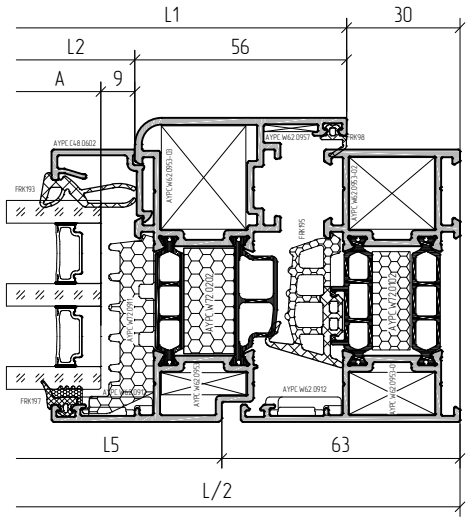

50 mm infill unit	
A=L1–130; B=H1–130	2

1. Choose the articles of glass bead profiles and rubber gaskets depending on infill unit thickness (see section 01.04 – Table of glazing).
The dimensions and quantity of AYPC.C48.0612 (AYPC.W62.0607) rod profile are determined by the type of hardware and leaf dimensions (L1 and H1).
3. AYPC.W62.0607 rod profile is only used with ROTO hardware kits.
* See section 01.07 – Profiles machining and assemblage (page 01.07.15 and page 01.07.40).
** The quantity of removed AYPC.W72.0911 seam sealing depends on the type of opening and quantity of bearing supports

Calculation example of balcony door with double casement profile

Article	Name / Image		L	1....
Profile				
AYPC.W72.0102	Frame profile		L	1
			H	1
			H	1
AYPC.W72.0202	Leaf profile		L1=L/2-32.5	2
			H1=H-35	4
AYPC.W72.0235	Leaf profile		L1=L/2-32.5	2
AYPC.W72.0504	Double casement profile		H3=H1-66	1

Article	Name / Image			1....
Profile				
AYPC.W72.0836	Threshold profile		L3=L-72	1
AYPC.W62.0613	Drip bar		L4=L/2-102.5	1
			L5=L/2-36.5	1
AYPC.C48.0612 (AYPC.W62.0607)	Rod profile		-	
AYPC.C48.0602	Glass bead profile		L2=L1-112	4
			H4=H1-156	4

Article	Name / Image	L	1....
Accessories			
FRK195	Rubber gasket	Lx1+H1x2+H3	1
FRK196	Rubber corner		2
FRK197	Rubber gasket	(Ax2+Bx2)x2	1
FRK179	Rubber corner		8
FRK09	Rubber gasket	L3	1
FRK186	Rubber gasket	L3-22x2	1
FRK187	Rubber gasket	L1x2	1
FRK193	Rubber gasket	(Ax2+Bx2)x2	1
FRK98	Rubber gasket	L1x4+H1x3	1
FRK101	Rubber gasket	L1x2+H1x3	1*
AYPC.SL160.0948	Rubber gasket	(L/2-102.5)+(L/2-36.5)	1
AYPC.W72.0911	Seam sealing	(Ax2+Bx2)x2-8x100**	1
AYPC.W62.0917	Bearing support		8
100x56x1(3)	Leveling support		8(8)
AYPC.W62.0953	Clamping corner		8
AYPC.W62.0953-01	Clamping corner		2
AYPC.W62.0953-02	Clamping corner		2
AYPC.W62.0953-03	Clamping corner		8
AYPC.W62.0912	Plastic corner		10
AYPC.W62.0957	Leveling corner		8
3.9x13-A2 DIN7981	Self-tapping screw	(L4/250+L5/250)x2+9	
AYPC.W72.0944	Double casement profile plug		1*
3.9x16-A2 DIN7981	Self-tapping screw	H3/450	
4.8x32-A2 DIN7981	Self-tapping screw	H3/450	
AYPC.W72.0936	Threshold plug kit		1 kit
AYPC.W72.0937	Threshold collar kit		1 kit
AYPC.W72.0938	Leaf collar kit		2 kits
AYPC.W72.0941-01	Double casement profile plug kit		1 kit*
AYPC.W62.0990	Kit of drip bar end plugs		2 kits
3.9x9.5-A2 DIN7982	Self-tapping screw		6
Pin 5x10	Pin 5x10 DIN6325D		40

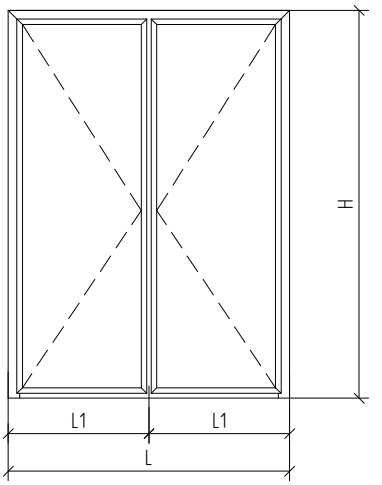

Calculation example of balcony door with double casement profile

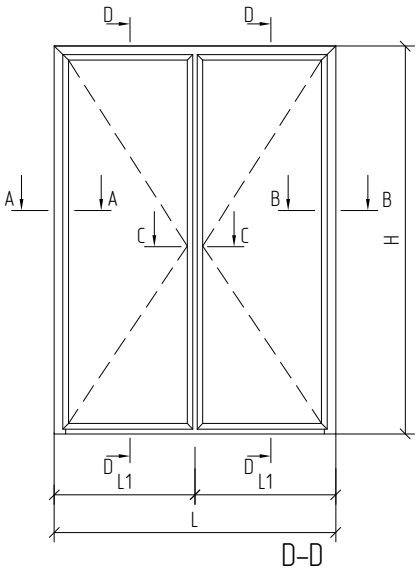

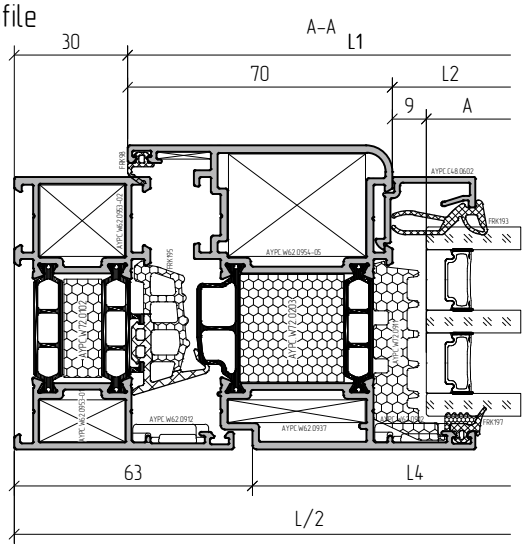

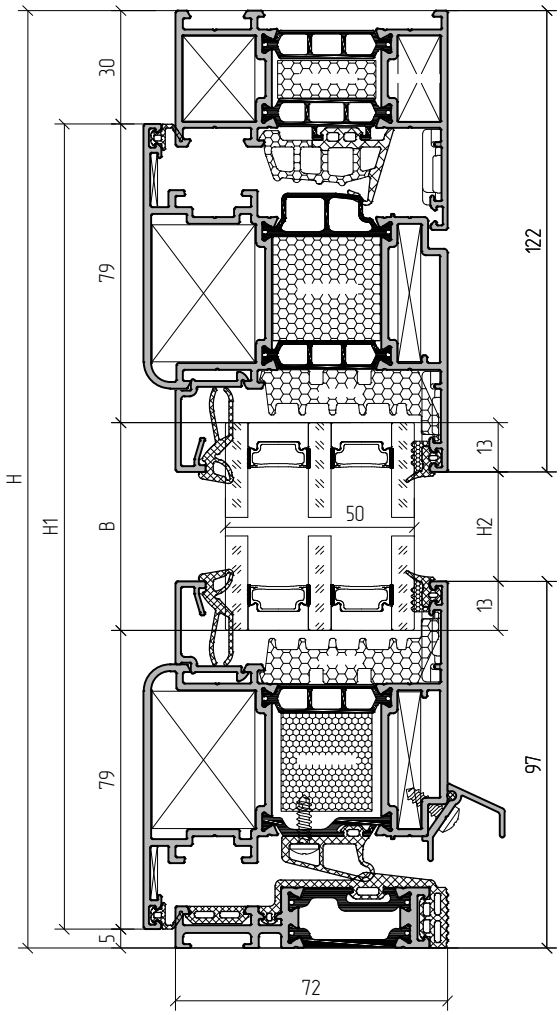

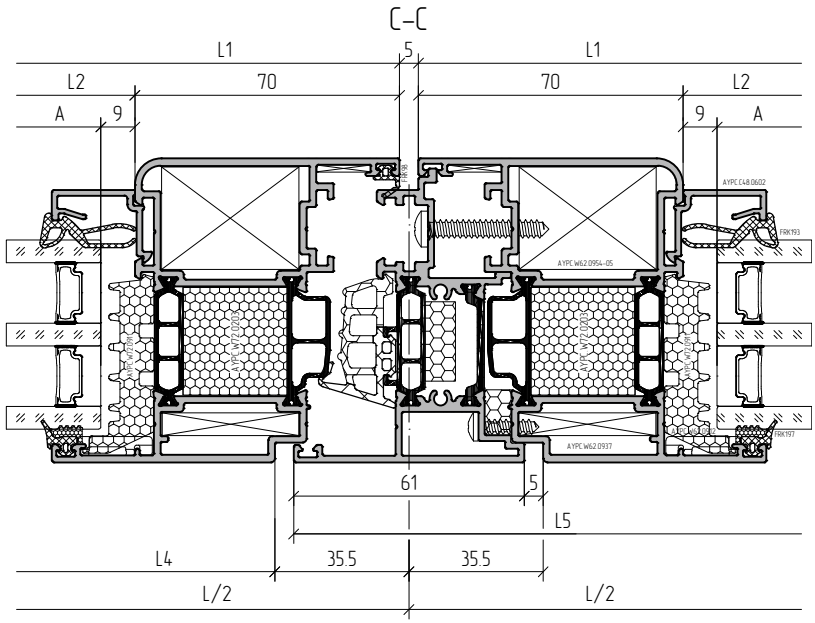

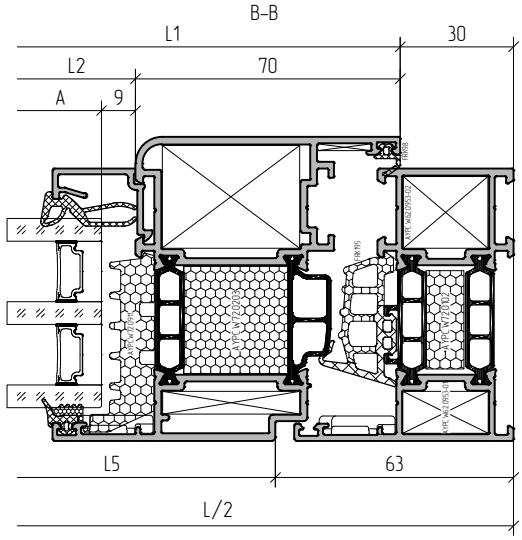

50 mm infill unit

A=L1–158; B=H1–158	2

1. Choose the articles of glass bead profiles and rubber gaskets depending on infill unit thickness (see section 01.04 – Table of glazing).
The dimensions and quantity of AYPC.C48.0612 (AYPC.W62.0607) rod profile are determined by the type of hardware and leaf dimensions (L1 and H1).
3. AYPC.W62.0607 rod profile is only used with ROTO hardware kits.
* See section 01.07 – Profiles machining and assemblage (page 01.07.15 and page 01.07.40).
** The quantity of removed AYPC.W72.0911 seam sealing depends on the type of opening and quantity of bearing supports

Calculation example of balcony door with double casement profile

Article	Name / Image		L	1....
Profile				
AYPC.W72.0102	Frame profile		L	1
			H	1
			H	1
AYPC.W72.0203	Leaf profile		L1=L/2-32.5	2
			H1=H-35	4
AYPC.W72.0236	Leaf profile		L1=L/2-32.5	2

Article	Name / Image		L	1....
Profile				
AYPC.W72.0504	Double casement profile		H3=H1-66	1
AYPC.W72.0836	Threshold profile		L3=L-72	1
AYPC.W62.0613	Drip bar		L4=L/2-102.5	1
			L5=L/2-36.5	1
AYPC.C48.0612 (AYPC.W62.0607)	Rod profile		-	
AYPC.C48.0602	Glass bead profile		L2=L1-140	4
			H4=H1-184	4

Article	Name / Image	L	1....
Accessories			
FRK195	Rubber gasket	Lx1+H1x2+H3	1
FRK196	Rubber corner		2
FRK197	Rubber gasket	(Ax2+Bx2)x2	1
FRK179	Rubber corner		8
FRK09	Rubber gasket	L3	1
FRK186	Rubber gasket	L3-22x2	1
FRK187	Rubber gasket	L1x2	1
FRK193	Rubber gasket	(Ax2+Bx2)x2	1
FRK98	Rubber gasket	L1x4+H1x3	1
FRK101	Rubber gasket	L1x2+H1x3	1*
AYPC.SL160.0948	Rubber gasket	(L/2-102.5)+(L/2-36.5)	1
AYPC.W72.0911	Seam sealing	(Ax2+Bx2)x2-8x100**	1
AYPC.W62.0917	Bearing support		8
100x56x1(3)	Leveling support		8(8)
AYPC.W62.0937	Clamping corner		8
AYPC.W62.0953-01	Clamping corner		2
AYPC.W62.0953-02	Clamping corner		2
AYPC.W62.0954-05	Clamping corner		8
AYPC.W62.0912	Plastic corner		10
AYPC.W62.0957	Leveling corner		8
3.9x13-A2 DIN7981	Self-tapping screw	(L4/250+L5/250)x2+9	
AYPC.W72.0944	Double casement profile plug		1*
3.9x16-A2 DIN7981	Self-tapping screw	H3/450	
4.8x32-A2 DIN7981	Self-tapping screw	H3/450	
AYPC.W72.0936	Threshold plug kit		1 kit
AYPC.W72.0937	Threshold collar kit		1 kit
AYPC.W72.0938	Leaf collar kit		2 kits
AYPC.W72.0941-01	Double casement profile plug kit		1 kit*
AYPC.W62.0990	Kit of drip bar end plugs		2 kits
3.9x9.5-A2 DIN7982	Self-tapping screw		6
Pin 5x10	Pin 5x10 DIN6325D		40

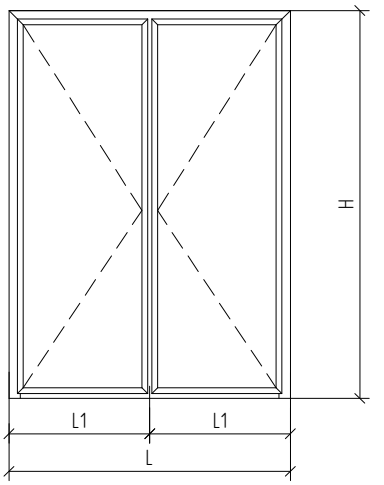

Door schemes

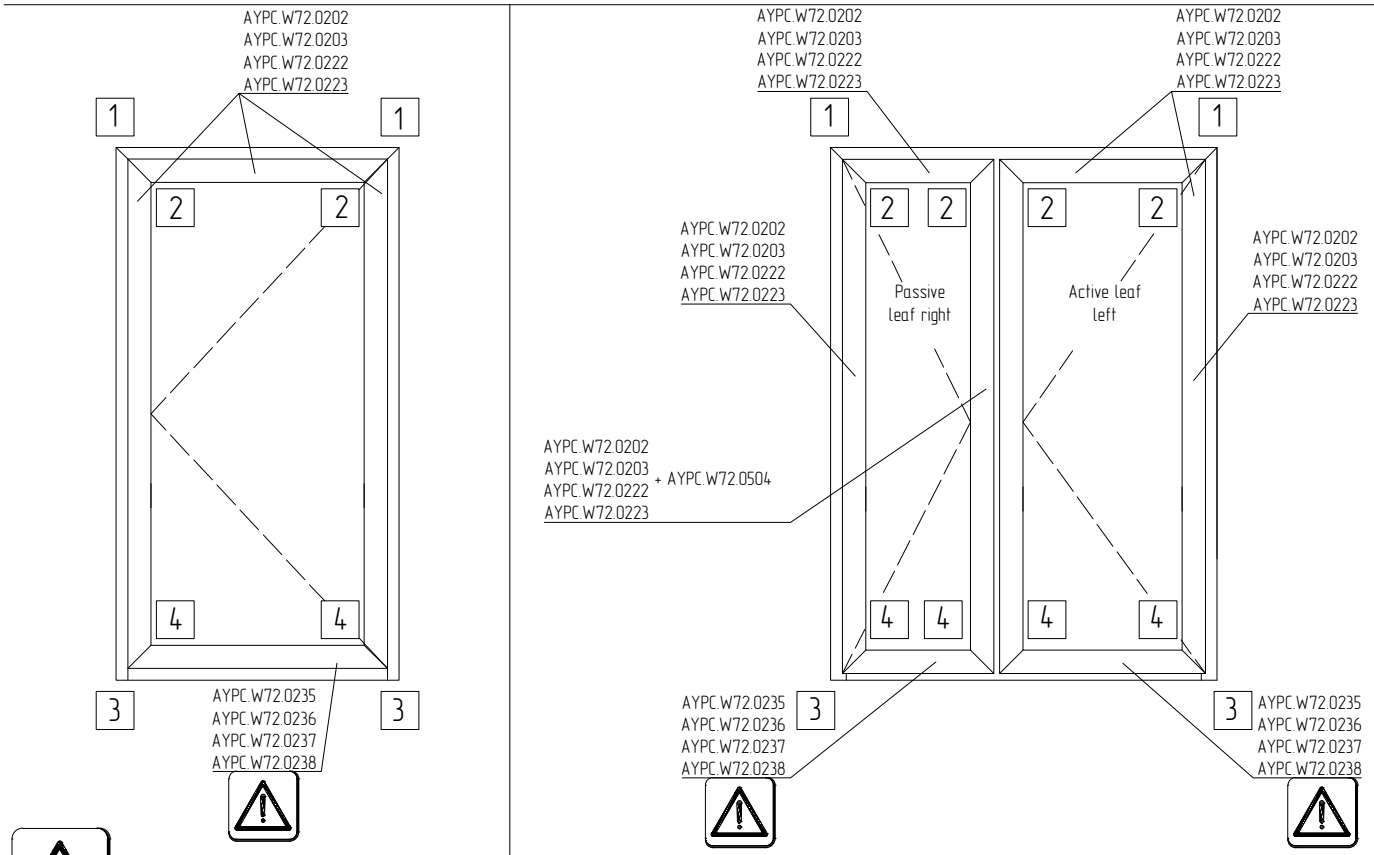

Terrace door leaf is made on the basis of a standard window sash.
For assembly sequence of corner connections except 3, 4 see section 01.07 – Profiles machining and assemblage

Correspondence table of clamping corners

Corner connection of leaf profiles

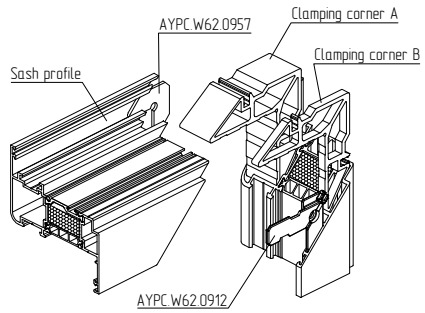

Article	Transom fixing element A	Transom fixing element B
AYPC.W72.0235, AYPC.W72.0237	AYPC.W62.0953–03	AYPC.W62.0953
AYPC.W72.0236, AYPC.W72.0238	AYPC.W62.0954–05	AYPC.W62.0937

Profile machining for corner connection with pins

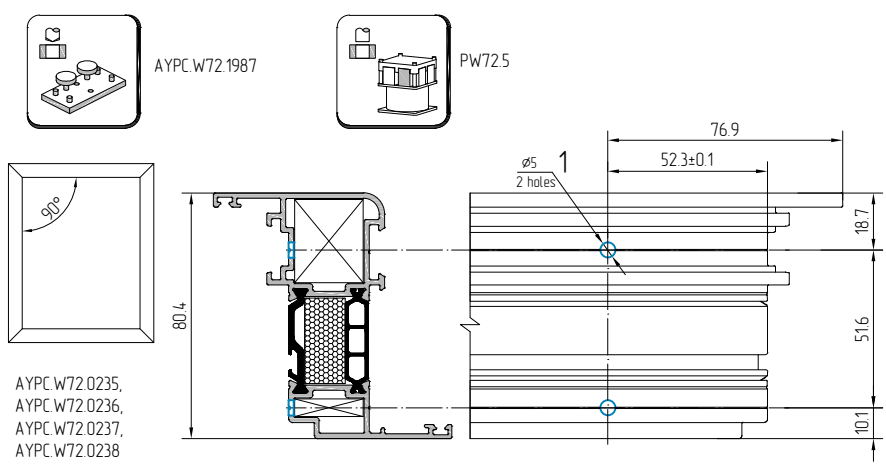

AYPC.W72.0235,
AYPC.W72.0236,
AYPC.W72.0237,
AYPC.W72.0238

Data for corner connection by crimping

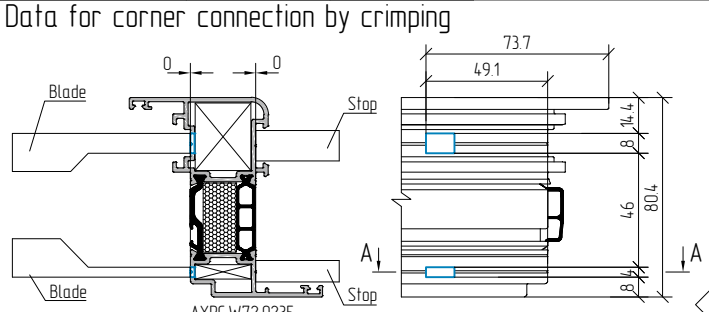

AYPC.W72.0235,
AYPC.W72.0236,
AYPC.W72.0237,
AYPC.W72.0238

Stop is shown schematically and depends on used tools

A–A

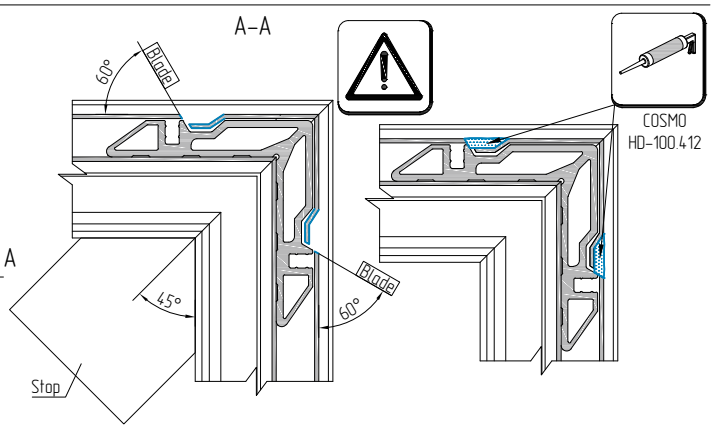

Assembly sequence of frame corner connection No 3 and installation of AYPC.W72.0836 threshold

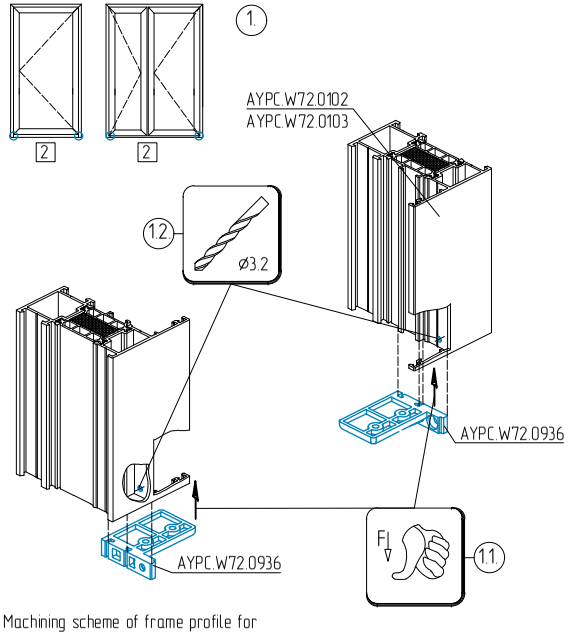

Machining scheme of frame profile for AYPC.W72.0936 threshold plug installation with the use of 3.9x9.5-A2 self-tapping screws

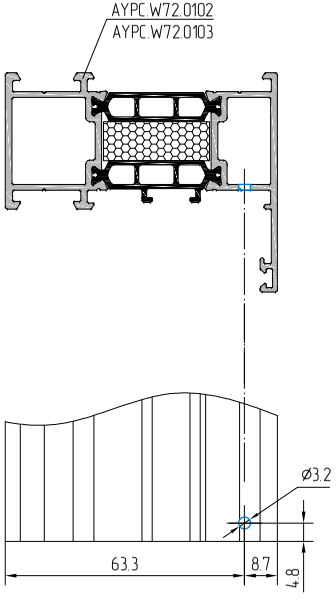

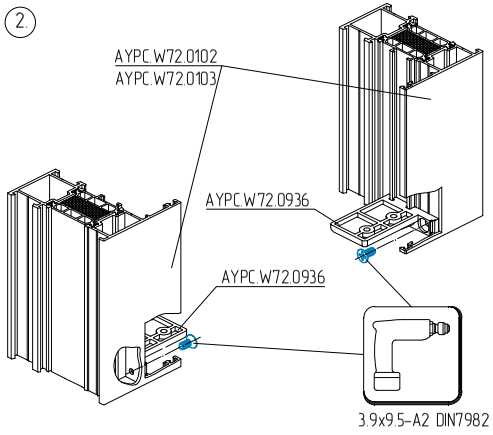

Installation scheme of AYPC.W72.0936 threshold plug

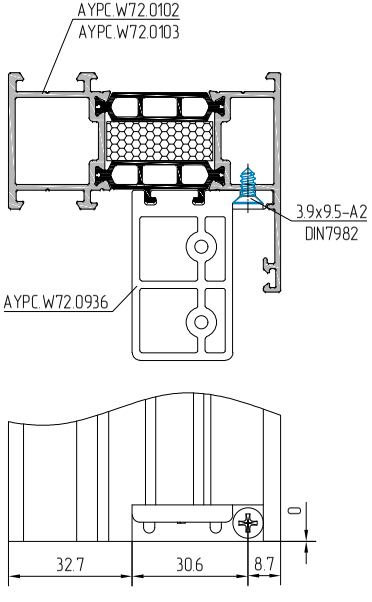

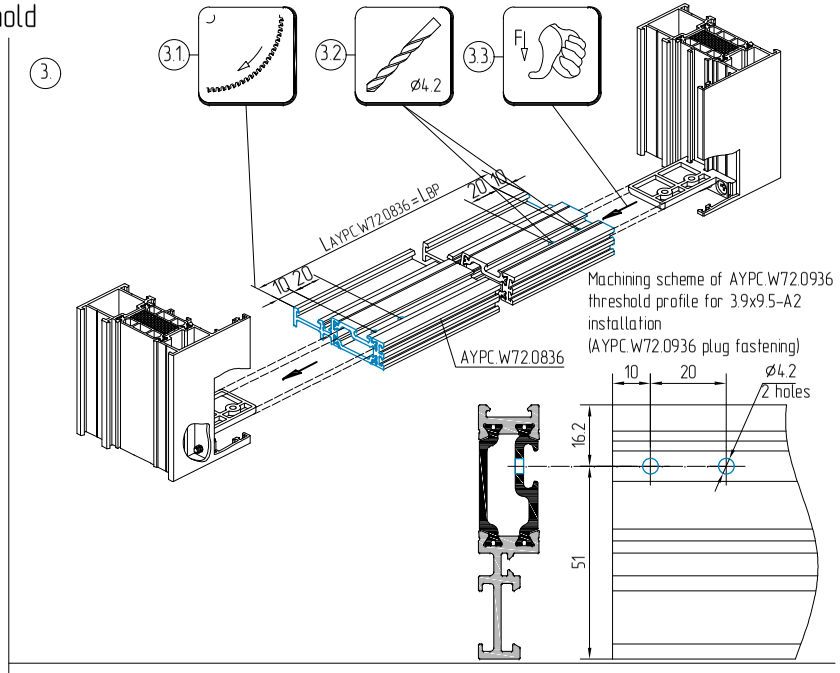

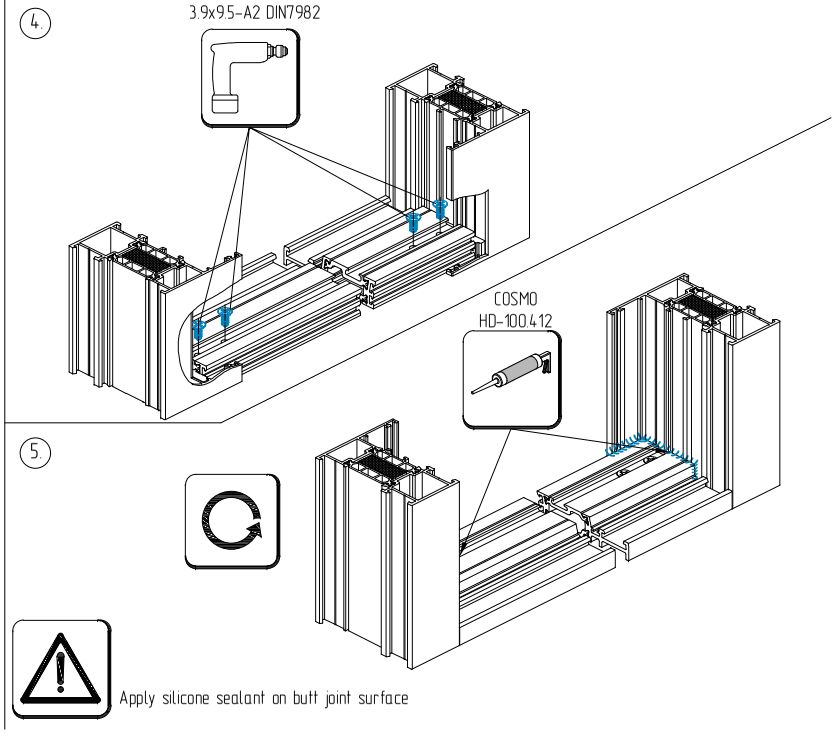

ALUTECH PROFILE SYSTEMS

Installation sequence of FRK186 gasket and AYPC.W72.0937 rubber corners

(6)

Location scheme of gaskets and rubber corners on the terrace door frame

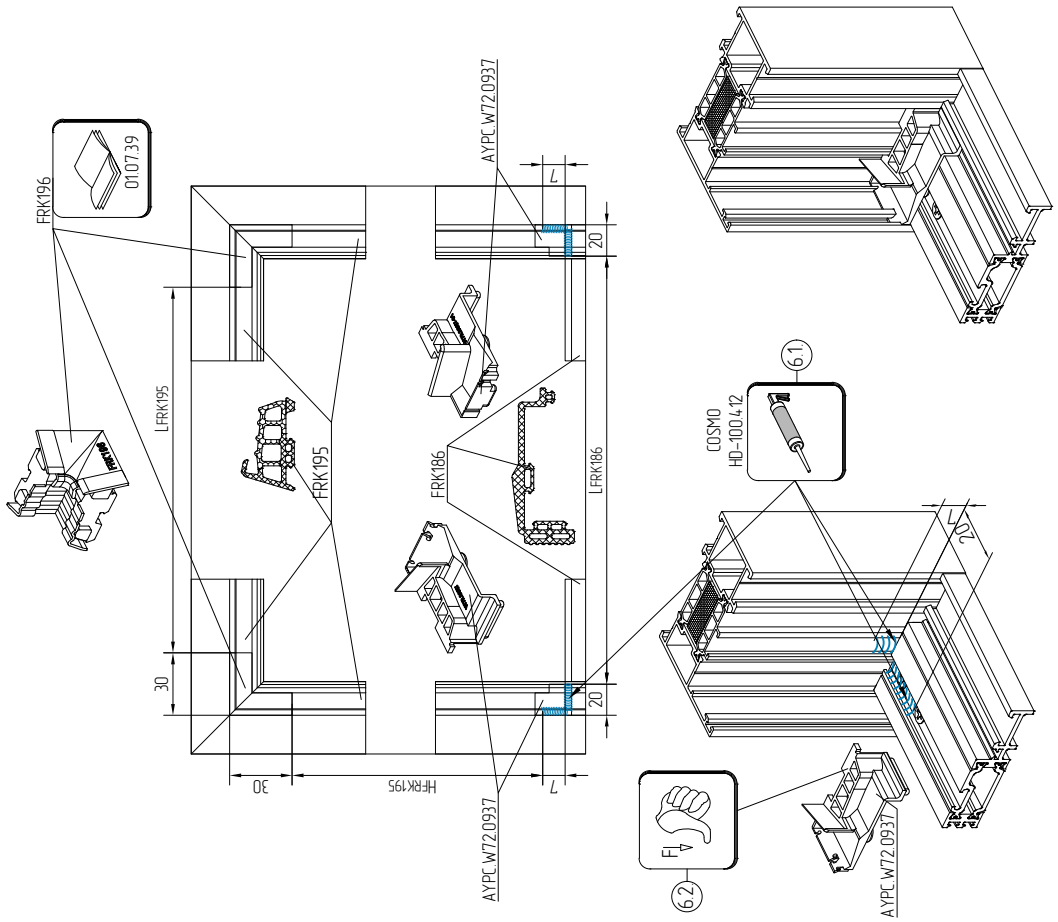

(7)

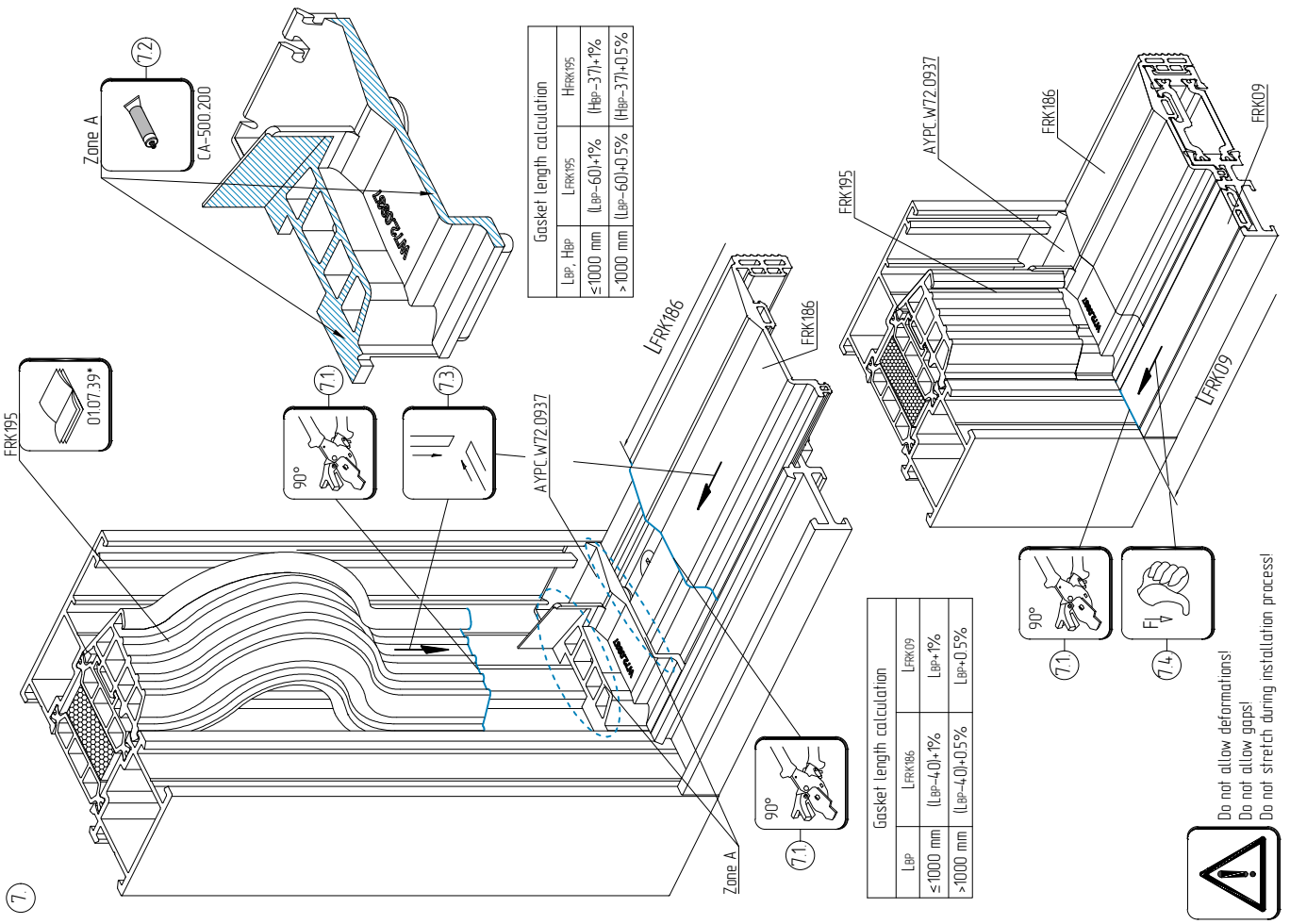

Assembly sequence of leaf corner connection No 4

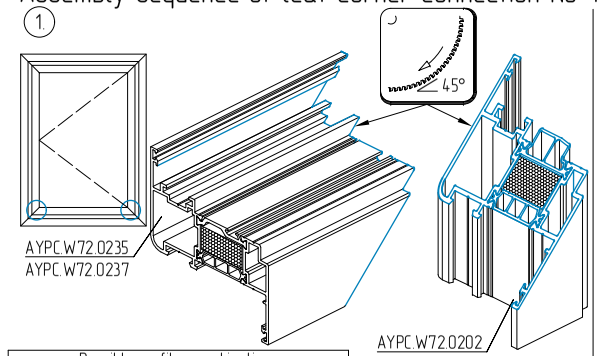

Possible profiles combinations		
	AYPC.W72.0202	AYPC.W72.0222
AYPC.W72.0235	+	–
AYPC.W72.0237	–	+

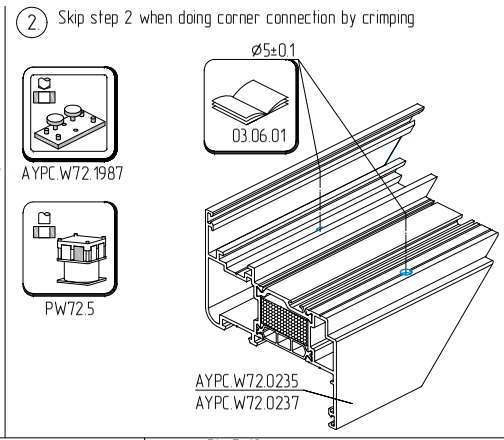

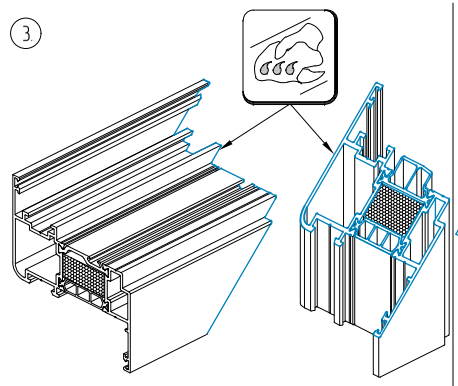

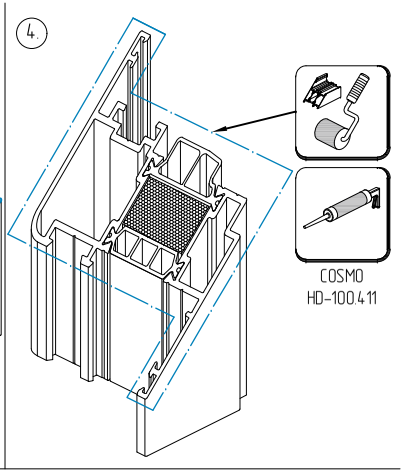

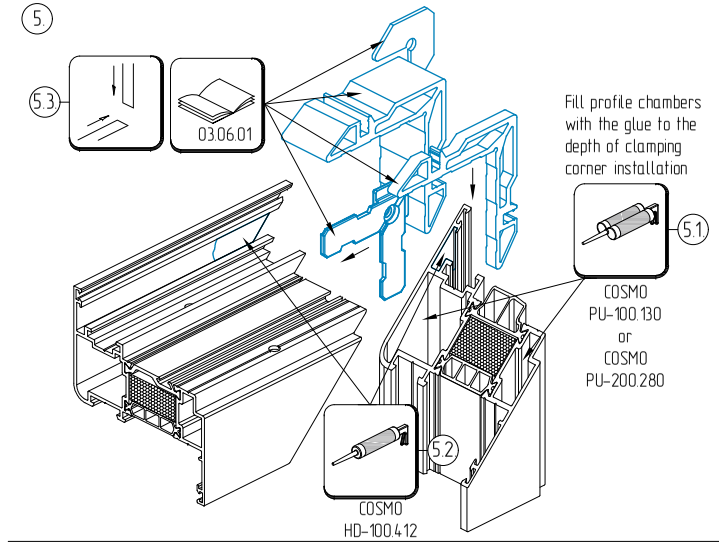

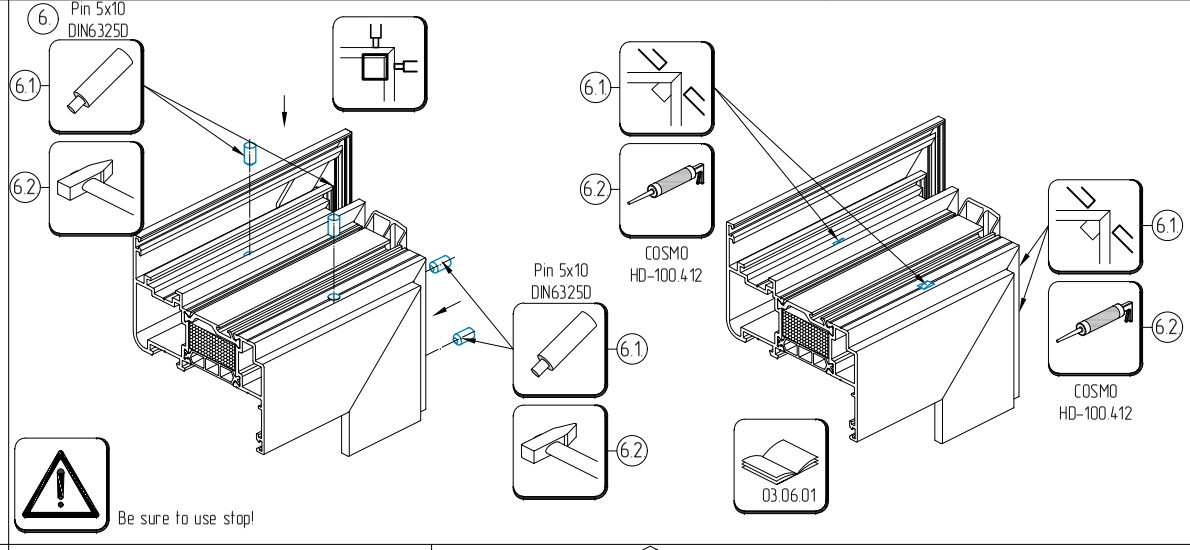

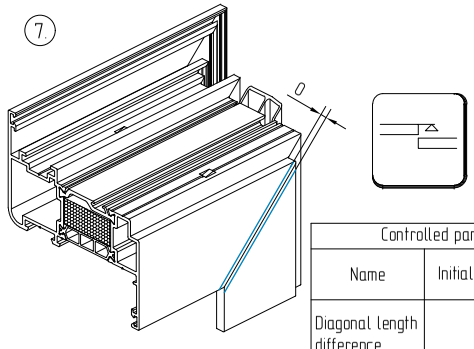

Controlled parameters of assembled item		
Name	Initial size intervals, mm	Limit deviation, mm
Diagonal length difference	≤1000 1000–2000 >2000	1.0 2.0 3.0

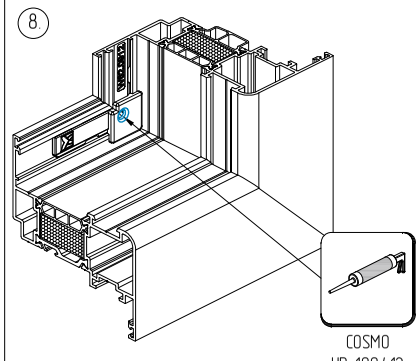

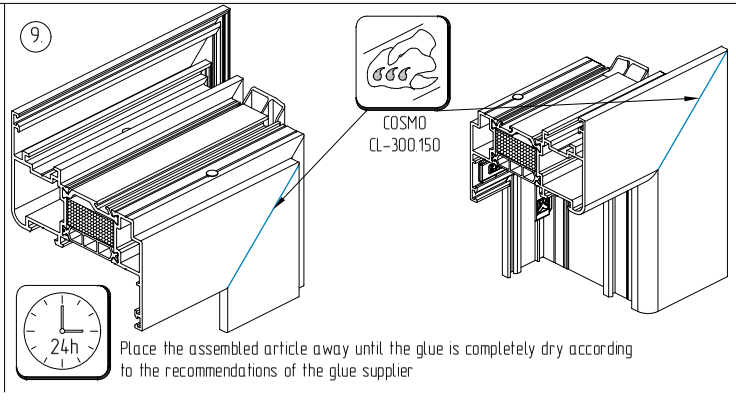

Assembly sequence of leaf corner connection No 4

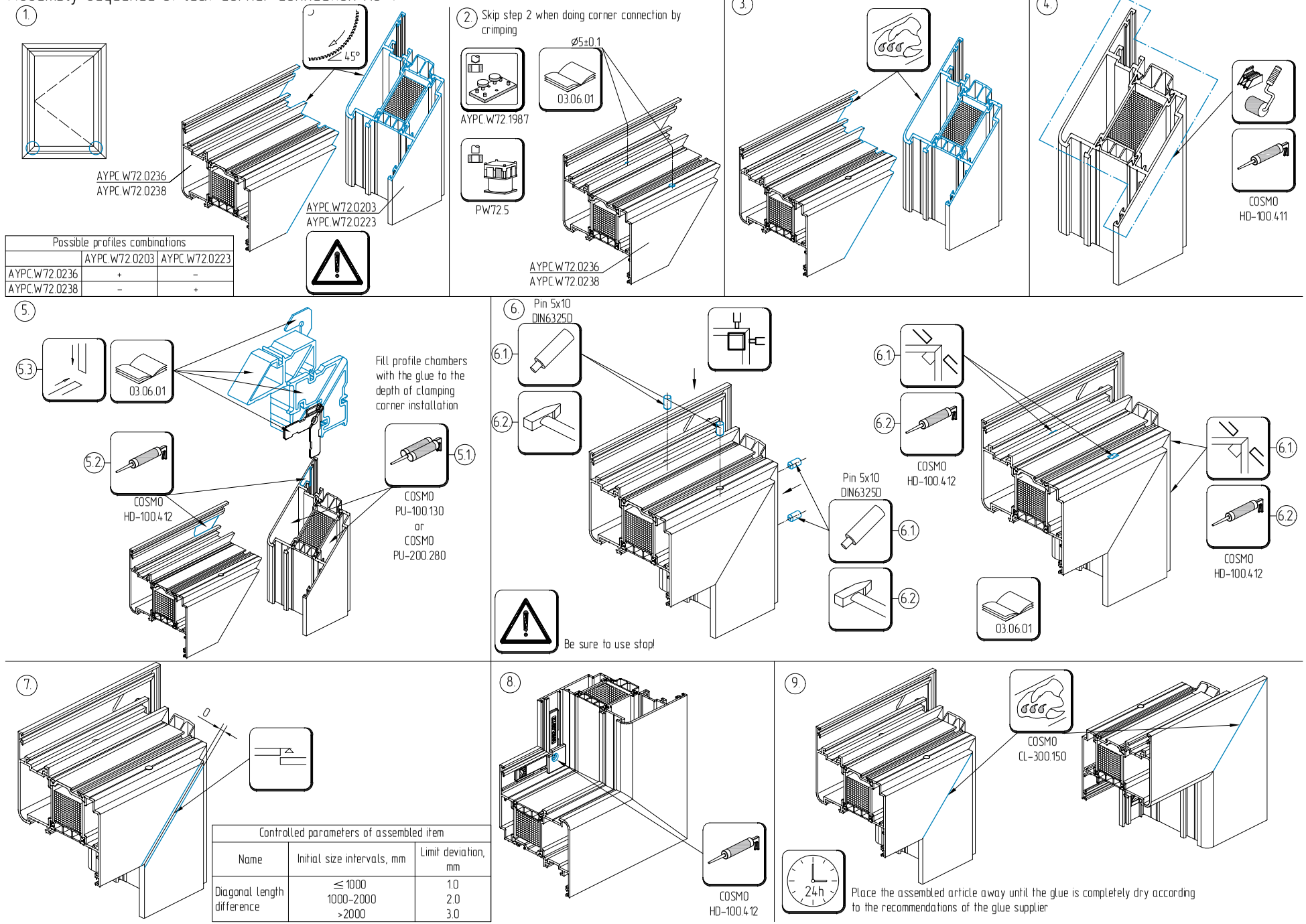

Possible profiles combinations		
	AYPC.W72.0203	AYPC.W72.0223
AYPC.W72.0236	+	–
AYPC.W72.0238	–	+

Controlled parameters of assembled item		
Name	Initial size intervals, mm	Limit deviation, mm
Diagonal length difference	≤ 1000 1000–2000 >2000	1.0 2.0 3.0

Installation sequence of leaf collars and FRK187 gasket

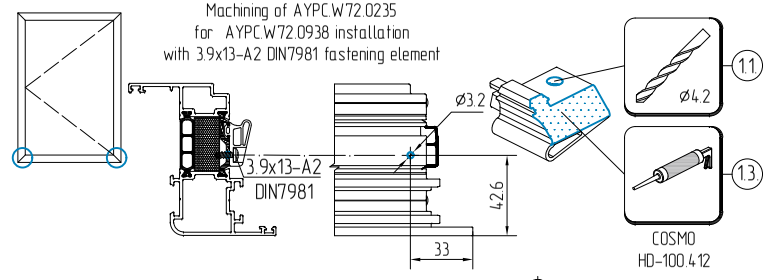

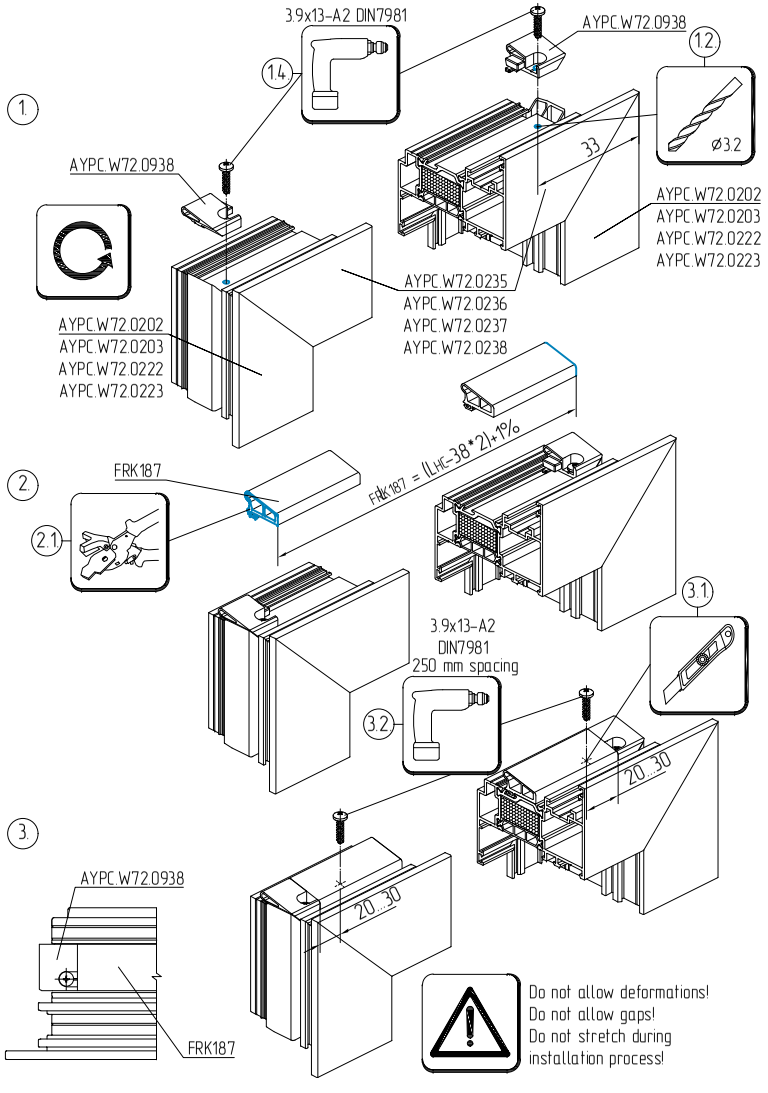

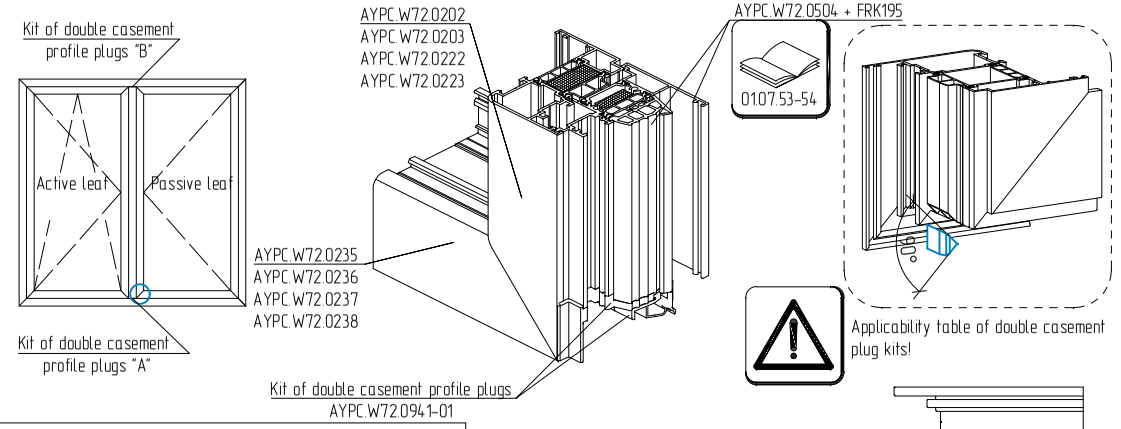

Applicability table of double casement plug kits		
Passive leaf	A	B
right	AYPC.W72.0941	AYPC.W72.0944-01
left	AYPC.W72.0941-01	AYPC.W72.0944

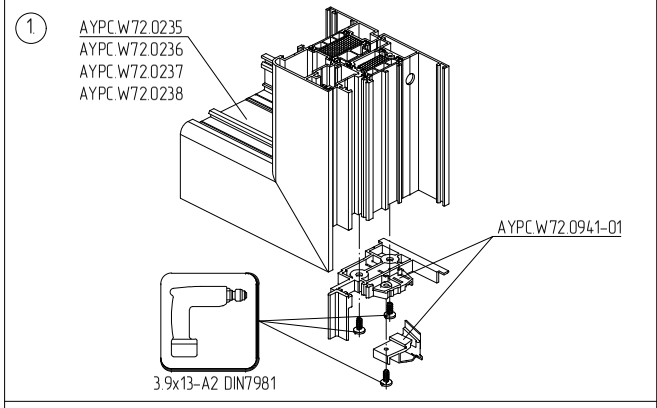

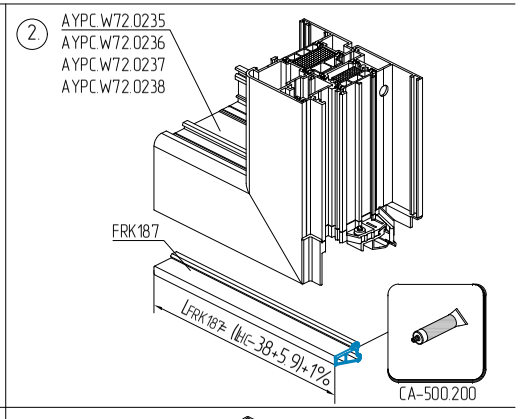

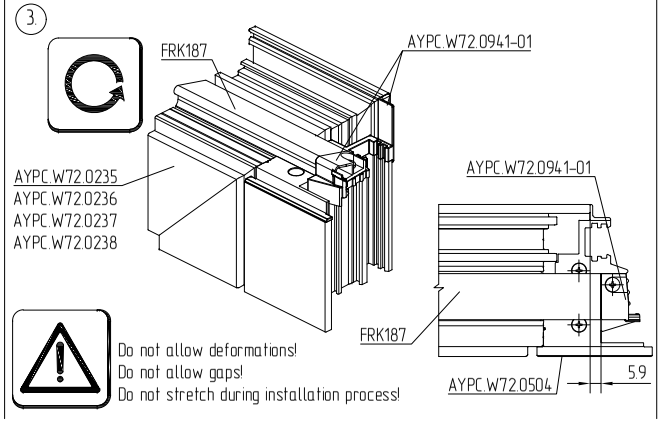

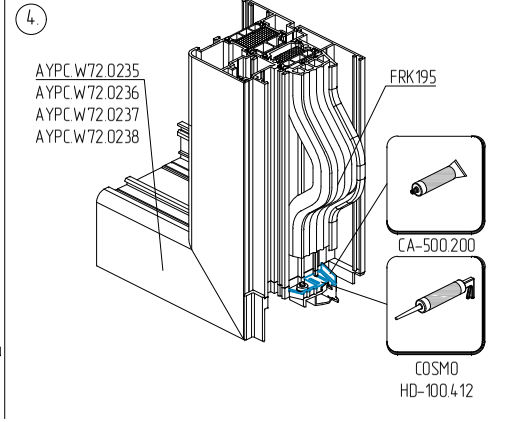

Machining and installation of drip bar on the window sash. Drainage system

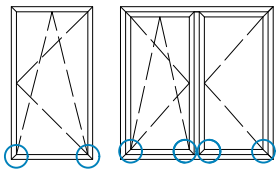

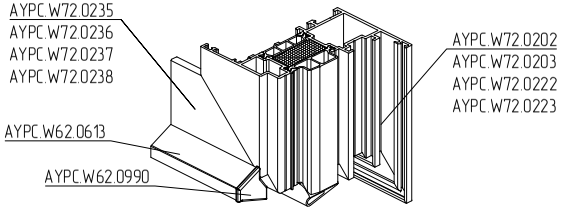

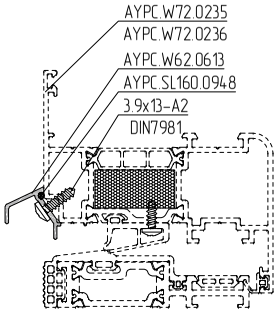

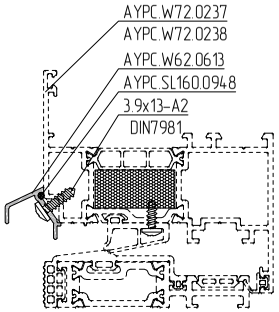

Machining of bottom leaf profile for the Drainage system

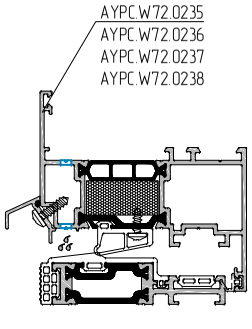

1. Machining of drip bar

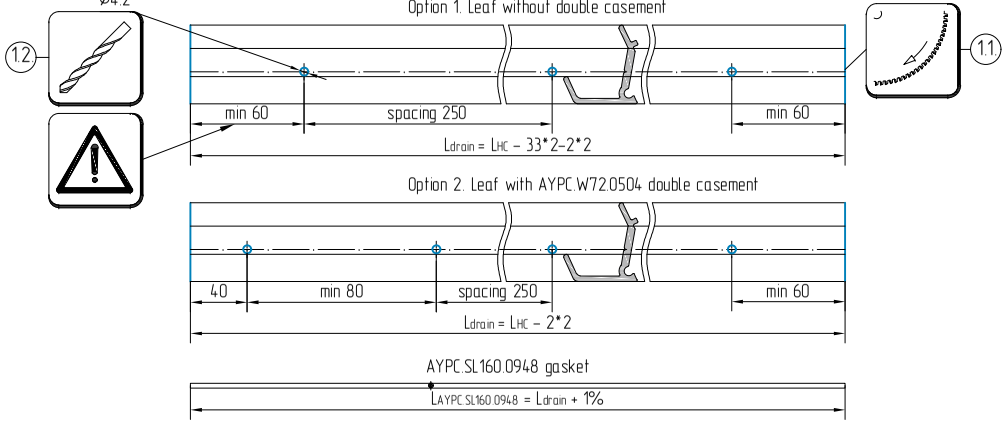

Machining scheme of AYPC.W62.0613 drip bar for 3.9x13-A2 DIN7981 installation

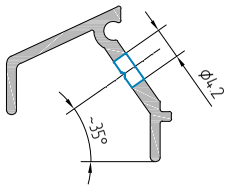

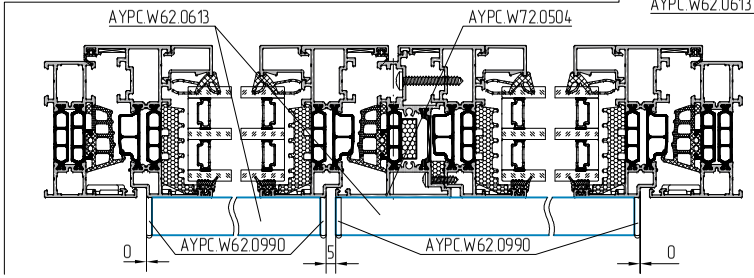

2. Installation of AYPC.W62.0990 and AYPC.SL160.0948 drain plugs

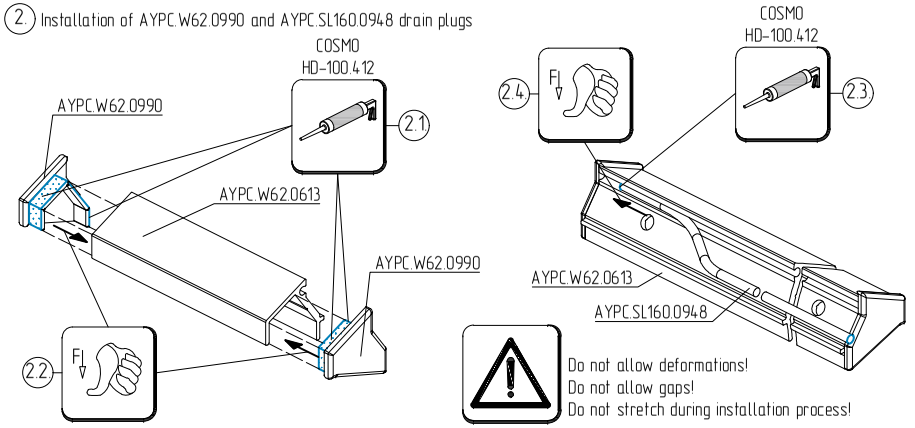

3. Drip bar installation

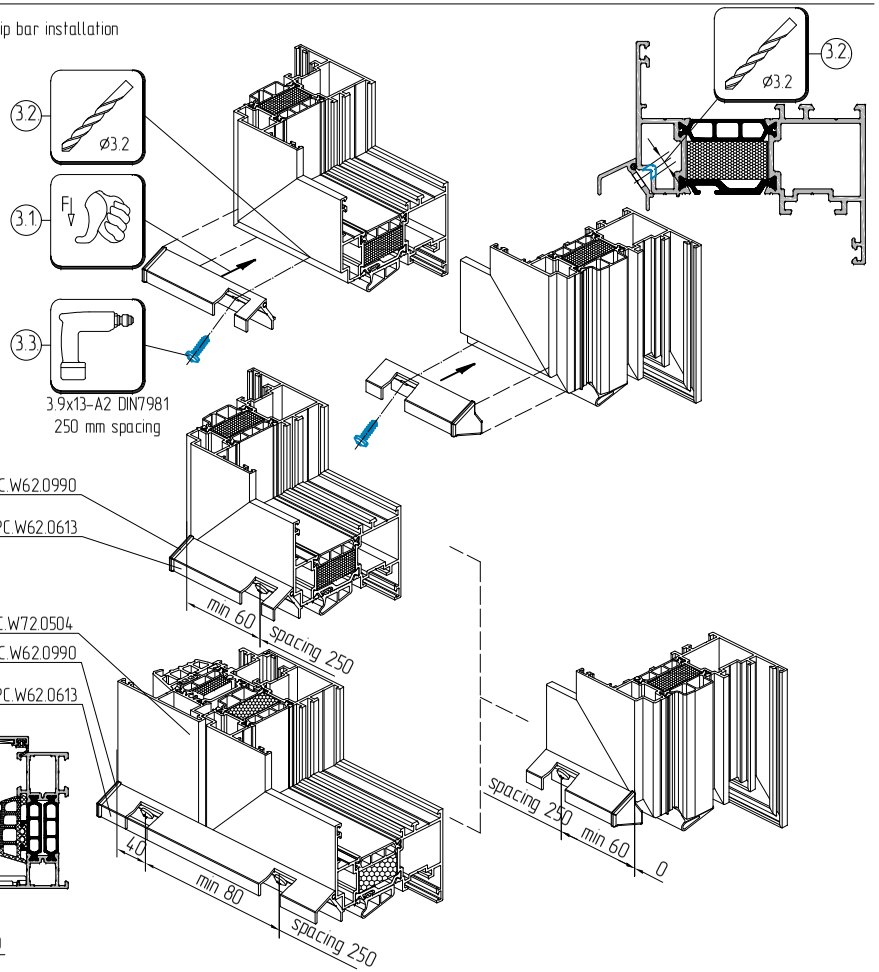

Cutting example of FRK09 gasket for bottom hidden window hinge installation

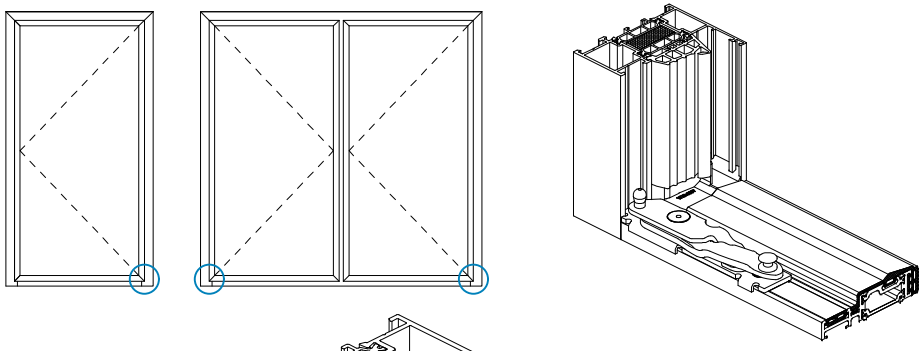

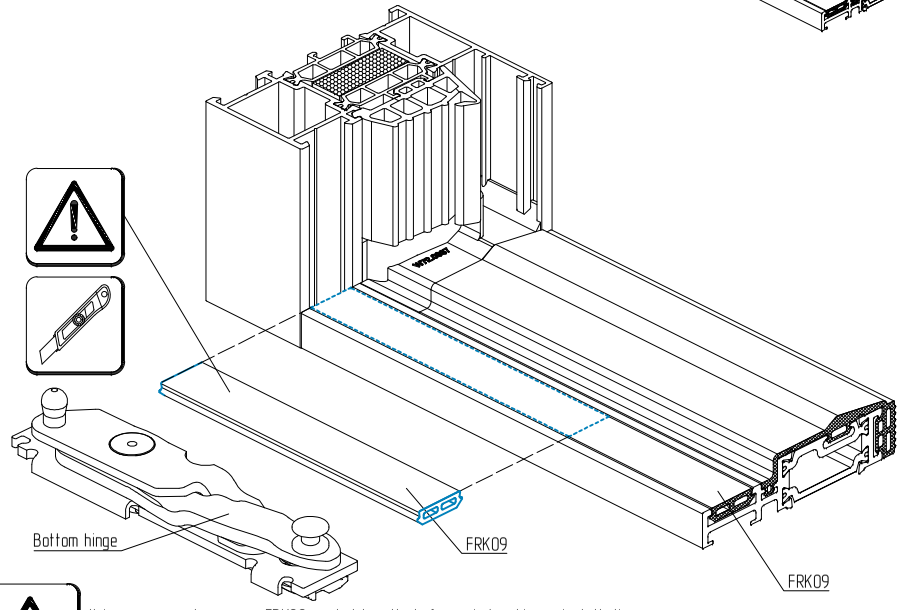

It is necessary to remove FRK09 gasket locally before window hinges installation.
The dimension of the removed part of FRK09 gasket depends on the opening type and hinges used.
Sealant data is available on request

Cutting example of FRK09 gasket for hardware elements installation

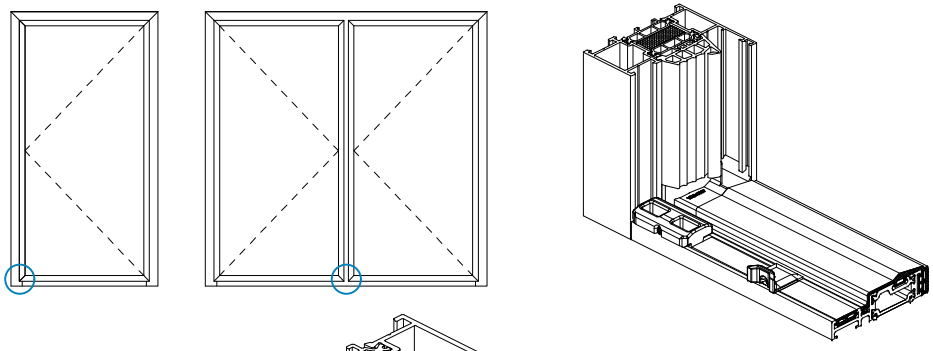

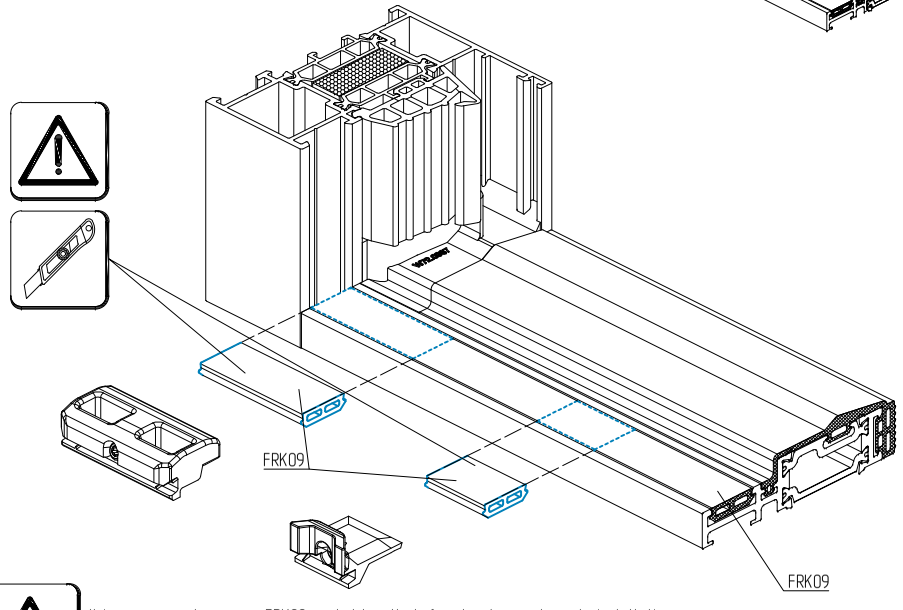

It is necessary to remove FRK09 gasket locally before hardware elements installation.
The dimension of the removed part of FRK09 gasket depends on the opening type and used hardware kits.
Sealant data is available on request

Cutting of sash grooves for window hardware installation

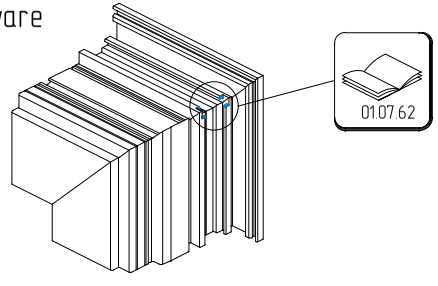

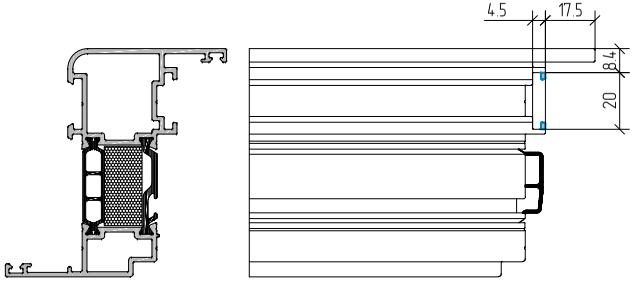

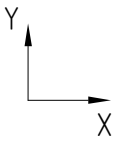

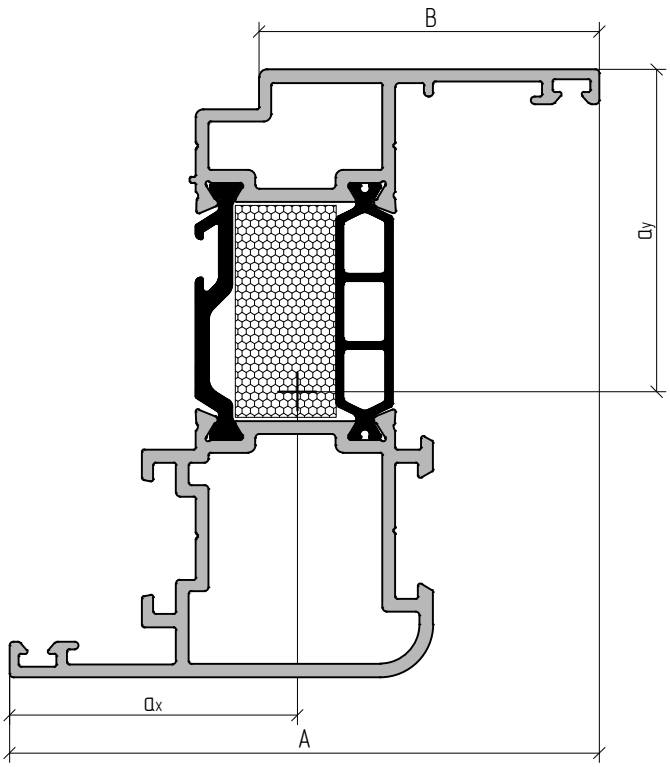

Profile	m, kg/m.	S, mm^2	Jx, cm^4	Wx, cm^3	ax, mm	Jy, cm^4	Wy, cm^3	ay, mm
AYPC.W72.0235	1.70	719.1	36.5	8.6	42.6	14.4	3.6	39.9
AYPC.W72.0236	2.06	851.8	46.5	11.3	41.3	28.8	6.2	46.7
AYPC.W72.0237	1.72	726.6	37.0	8.6	43.0	14.48	3.6	39.8
AYPC.W72.0238	2.08	859.4	46.3	11.1	41.6	29	6.2	46.5

ALUTECH ALT W72
Windows and doors
with thermal break

CLASSIC DOORS

04.01.01 System description

04.02.01 Order information

04.03.01 Accessories

04.04.01 Sections and junctions

04.05.01 Examples of standard system calculation

04.06.01 Machining and assemblage

04.07.01 Statics

W72 door series

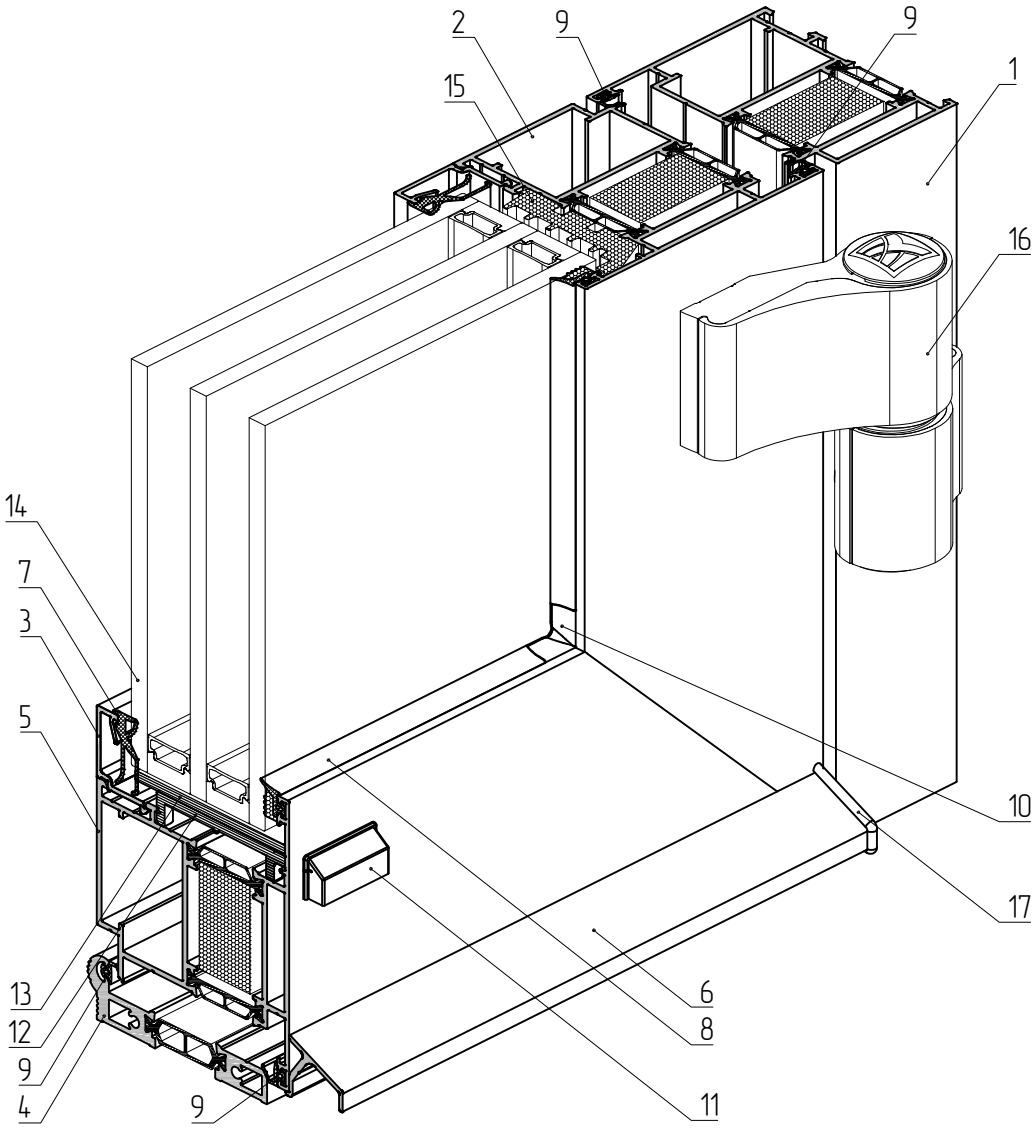

1 – AYPC.W72.0104 frame profile
2 – AYPC.W72.0204 leaf profile
3 – AYPC.C48.0602 glass bead profile
4 – AYPC.W72.0838 threshold profile
5 – AYPC.W72.0241 leaf profile
6 – AYPC.C48.0611 drip bar
7 – FRK194 rubber gasket
8 – FRK197 rubber gasket
9 – FRK98 rubber gasket
10 – FRK179 rubber corner
11 – AYPC.C48.0919M-01 drain plug
12 – AYPC.W62.0917 bearing support
13 – 100x56x1 (100x56x3) leveling support kit
14 – 50 mm infill unit
15 – AYPC.W72.0911 seam sealing
16 – 2AH67 door hinge
17 – AYPC.W62.0999 drain plug

Article	Name / Image	Weight, kg/m	Exterior perimeter, mm	Cross sectional area, mm^2	Code	Profile colour	Bar length, m	Quantity in pack		Weight of a pack	
								pcs	m	net, kg	gross, kg
AYPC.W72.0104E	Frame profile 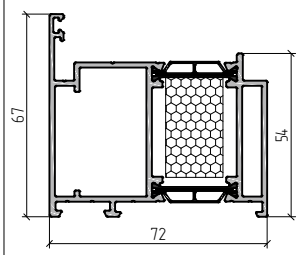	1.83	371.4	735.3	10960321 10960324 10960330 10960331 109603808	RAL9016 RAL8014 RAL8017 RAL9006 A00–D6	6.5	2	13	24.3 24.3 24.3 24.3 23.8	25.2 25.2 25.2 25.2 24.6
AYPC.W72.0104NE	Frame profile 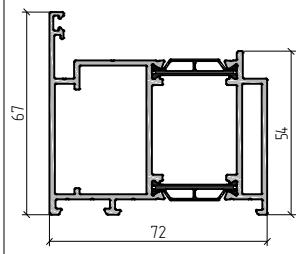	1.81	371.4	735.3	10964200 10964221 10964224 10964230 10964231 109642808	00 RAL9016 RAL8014 RAL8017 RAL9006 A00–D6	6.5	2	13	23.6 24.1 24.1 24.1 24.1 23.6	24.3 24.9 24.9 24.9 24.9 24.3
AYPC.W72.0105E	Frame profile 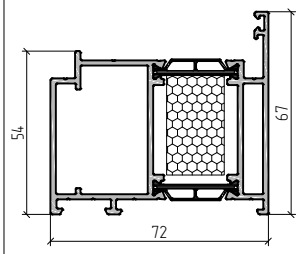	1.83	370.1	734.7	10961121 10961124 10961130 10961131 109611808	RAL9016 RAL8014 RAL8017 RAL9006 A00–D6	6.5	2	13	24.3 24.3 24.3 24.3 23.7	25.1 25.1 25.1 25.1 24.6
AYPC.W72.0105NE	Frame profile 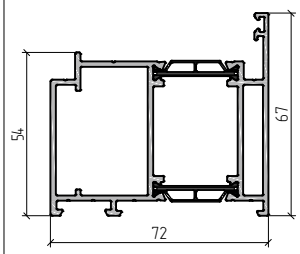	1.81	370.1	734.7	10964800 10964821 10964824 10964830 10964831 109648808	00 RAL9016 RAL8014 RAL8017 RAL9006 A00–D6	6.5	2	13	23.5 24.1 24.1 24.1 24.1 23.5	24.3 24.9 24.9 24.9 24.9 24.3
AYPC.W72.0204	Leaf profile 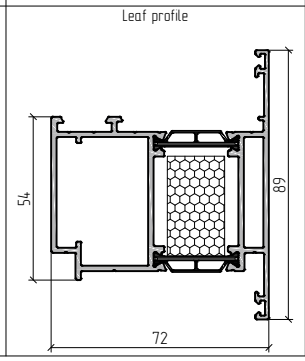	1.95	431.5	780.1	10960621 10960624 10960630 10960631 109606808	RAL9016 RAL8014 RAL8017 RAL9006 A00–D6	6.5	2	13	26.0 26.0 26.0 26.0 25.3	26.9 26.9 26.9 26.9 26.2

Article	Name / Image	Weight, kg/m	Exterior perimeter, mm	Cross sectional area, mm^2	Code	Profile colour	Bar length, m	Quantity in pack		Weight of a pack	
								pcs	m	net, kg	gross, kg
AYPC.W72.0204NE	Leaf profile 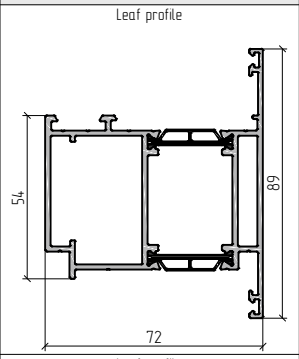	1.93	431.5	780.1	10963900 10963921 10963924 10963930 10963931 109639808	00 RAL9016 RAL8014 RAL8017 RAL9006 A00–D6	6.5	2	13	25.1 25.8 25.8 25.8 25.8 25.1	26.0 26.7 26.7 26.7 26.7 26.0
AYPC.W72.0205E	Leaf profile 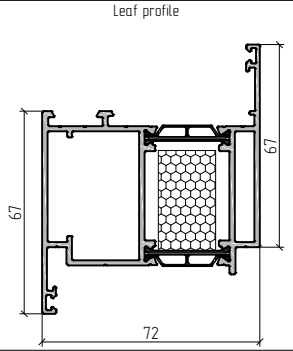	1.95	431.8	780.6	10961521 10961524 10961530 10961531 109615808	RAL9016 RAL8014 RAL8017 RAL9006 A00–D6	6.5	2	13	26.0 26.0 26.0 26.0 25.4	26.8 26.8 26.8 26.8 26.2
AYPC.W72.0205NE	Leaf profile 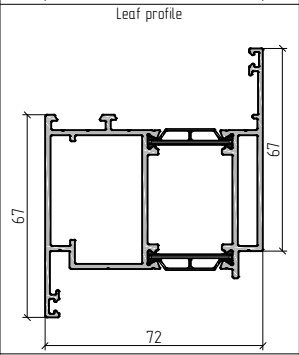	1.93	431.8	780.6	10963800 10963821 10963824 10963830 10963831 109638808	00 RAL9016 RAL8014 RAL8017 RAL9006 A00–D6	6.5	2	13	25.1 25.8 25.8 25.8 25.8 25.1	26.0 26.6 26.6 26.6 26.6 26.0
AYPC.W72.0214E	Leaf profile (bi-metal) 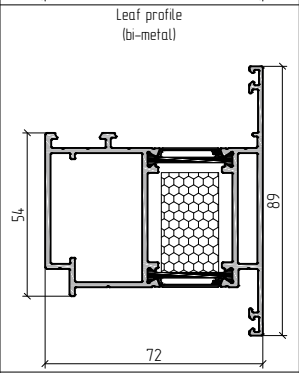	1.98	431.5	805.1	10981021 10981024 10981030 10981031 109810808	RAL9016 RAL8014 RAL8017 RAL9006 A00–D6	6.5	4	26	52.8 52.8 52.8 52.8 51.5	53.7 53.7 53.7 53.7 52.3
AYPC.W72.0214NE	Leaf profile (bi-metal) 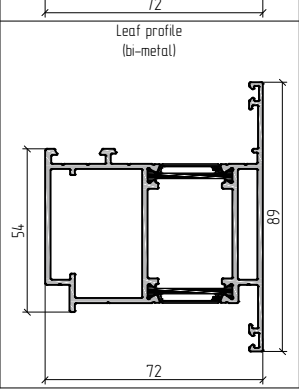	1.96	431.5	805.1	10969400 10969421 10969424 10969430 10969431 109694808	00 RAL9016 RAL8014 RAL8017 RAL9006 A00–D6	6.5	2	13	25.5 26.2 26.2 26.2 26.2 25.5	26.3 27.0 27.0 27.0 27.0 26.3

Article	Name / Image	Weight, kg/m	Exterior perimeter, mm	Cross sectional area, mm²	Code	Profile colour	Bar length, m	Quantity in pack		Weight of a pack	
								pcs	m	net, kg	gross, kg
AYPC.W72.0215E	Leaf profile (bi-metal) 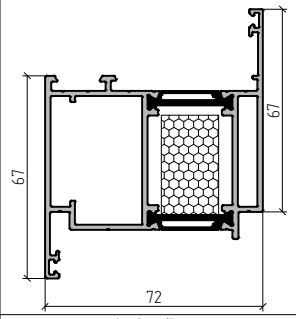	1.98	431.8	805.1	10981121 10981124 10981130 10981131 109811808	RAL9016 RAL8014 RAL8017 RAL9006 A00–D6	6.5	4	26	52.8 52.8 52.8 52.8 51.5	53.7 53.7 53.7 53.7 52.3
AYPC.W72.0215NE	Leaf profile (bi-metal) 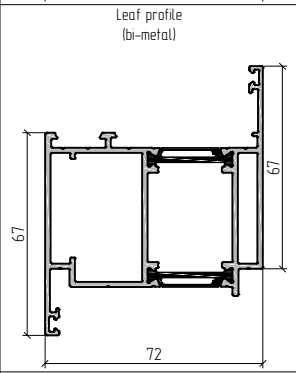	1.96	431.8	805.1	10969500 10969521 10969524 10969530 10969531 109695808	00 RAL9016 RAL8014 RAL8017 RAL9006 A00–D6	6.5	2	13	25.5 26.2 26.2 26.2 26.2 25.5	26.3 27.0 27.0 27.0 27.0 26.3
AYPC.W72.0241E	Leaf profile 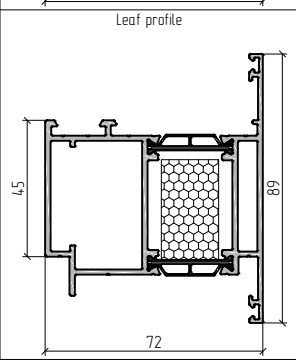	1.97	440.5	787.2	10928521 10928524 10928530 10928531 109285808	RAL9016 RAL8014 RAL8017 RAL9006 A00–D6	6.5	2	13	26.3 26.3 26.3 26.3 25.6	27.2 27.2 27.2 27.2 26.5
AYPC.W72.0241NE	Leaf profile 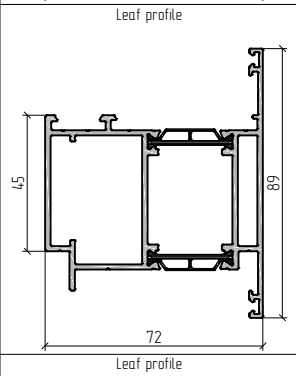	1.95	440.5	787.2	10935000 10935021 10935024 10935030 10935031 109350808	00 RAL9016 RAL8014 RAL8017 RAL9006 A00–D6	6.5	2	13	25.4 26.1 26.1 26.1 26.1 25.4	26.2 26.9 26.9 26.9 26.9 26.2
AYPC.W72.0242E	Leaf profile 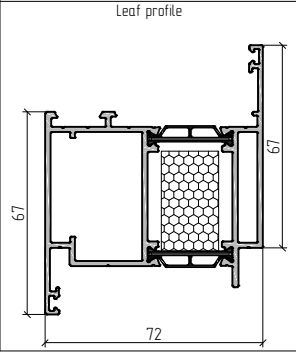	1.972	440.1	788.6	10928621 10928624 10928630 10928631 109286808	RAL9016 RAL8014 RAL8017 RAL9006 A00–D6	6.5	2	13	26.3 26.3 26.3 26.3 25.6	27.1 27.1 27.1 27.1 26.5

Article	Name / Image	Weight, kg/m	Exterior perimeter, mm	Cross sectional area, mm^2	Code	Profile colour	Bar length, m	Quantity in pack		Weight of a pack	
								pcs	m	net, kg	gross, kg
AYPC.W72.0242NE	Leaf profile 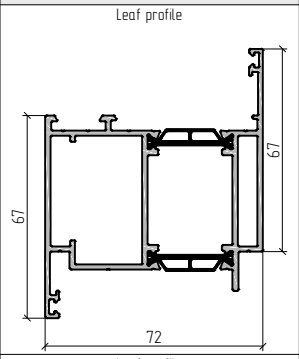	1.96	440.1	788.6	10935100 10935121 10935124 10935130 10935131 109351808	00 RAL9016 RAL8014 RAL8017 RAL9006 A00–D6	6.5	2	13	25.4 26.1 26.1 26.1 26.1 25.4	26.3 26.9 26.9 26.9 26.9 26.3
AYPC.W72.0243E	Leaf profile (bi-metal) 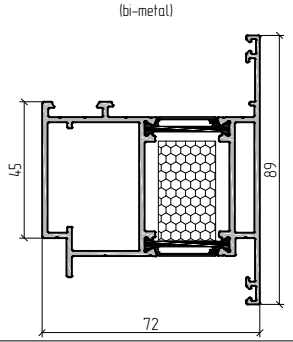	2.01	440.5	787.2	10934721 10934724 10934730 10934731 109347808	RAL9016 RAL8014 RAL8017 RAL9006 A00–D6	6.5	2	13	26.9 26.9 26.9 26.9 26.2	27.7 27.7 27.7 27.7 26.8
AYPC.W72.0243NE	Leaf profile (bi-metal) 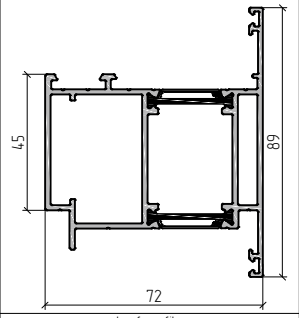	2.00	440.5	787.2	10934600 10934621 10934624 10934630 10934631 109346808	00 RAL9016 RAL8014 RAL8017 RAL9006 A00–D6	6.5	2	13	26.2 26.9 26.9 26.9 26.9 26.2	27.1 27.7 27.7 27.7 27.7 27.1
AYPC.W72.0244E	Leaf profile (bi-metal) 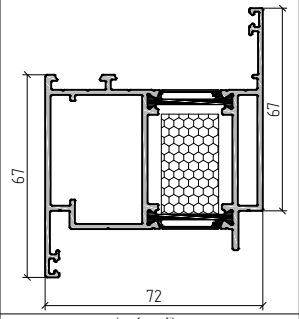	2.02	440.1	788.6	10934921 10934924 10934930 10934931 109349808	RAL9016 RAL8014 RAL8017 RAL9006 A00–D6	6.5	2	13	26.9 26.9 26.9 26.9 26.2	27.7 27.7 27.7 27.7 26.8
AYPC.W72.0244NE	Leaf profile (bi-metal) 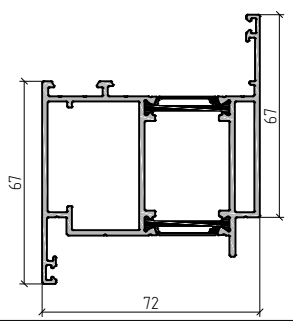	2.00	440.1	788.6	10934800 10934821 10934824 10934830 10934831 109348808	00 RAL9016 RAL8014 RAL8017 RAL9006 A00–D6	6.5	2	13	26.0 26.7 26.7 26.7 26.7 26.0	26.9 27.5 27.5 27.5 27.5 26.9

Article	Name / Image	Weight, kg/m	Exterior perimeter, mm	Cross sectional area, mm²	Code	Profile colour	Bar length, m	Quantity in pack		Weight of a pack	
								pcs	m	net, kg	gross, kg
AYPC.W72.0838E	Threshold profile 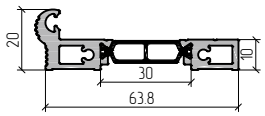	0.96	187	392.6	10927800 109278808	00 A00–D6	6.5	4	26	24.8 24.8	25.3 25.3
AYPC.W72.0839E	Basement profile 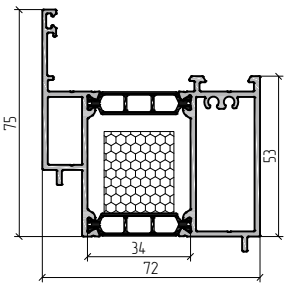	1.86	368	768.0	10927921 10927924 10927930 10927931 109279808	RAL9016 RAL8014 RAL8017 RAL9006 A00–D6	6.5	2	13	24.8 24.8 24.8 24.8 24.2	25.6 25.6 25.6 25.6 25.0
AYPC.W72.0839NE	Basement profile 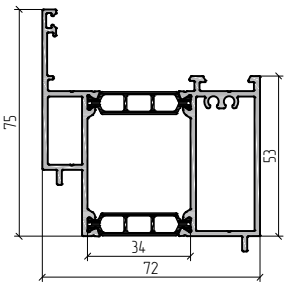	1.85	368	768.0	10937000 10937021 10937024 10937030 10937031 109370808	00 RAL9016 RAL8014 RAL8017 RAL9006 A00–D6	6.5	2	13	24.0 24.6 24.6 24.6 24.6 24.2	24.8 25.4 25.4 25.4 25.4 24.8

Image	Code	Article	Application
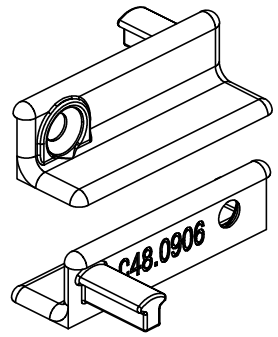	10410400	AYPC.C48.0906	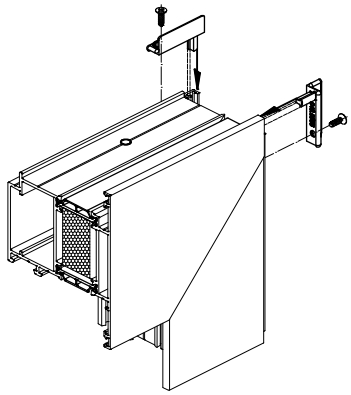 Plug. Quantity in pack – 100 pcs
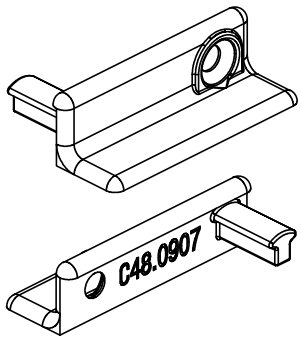	10410500	AYPC.C48.0907	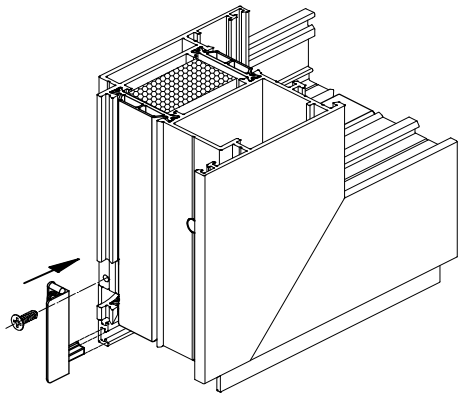 Plug. Quantity in pack – 100 pcs
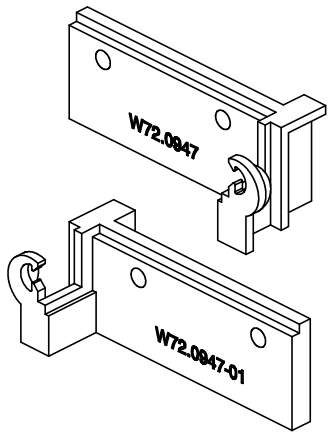	12950800	AYPC.W72.0947	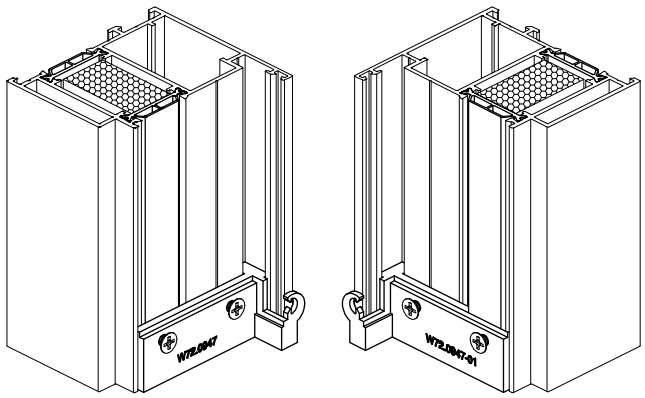 Threshold plug kit. Quantity in pack – 50 pcs
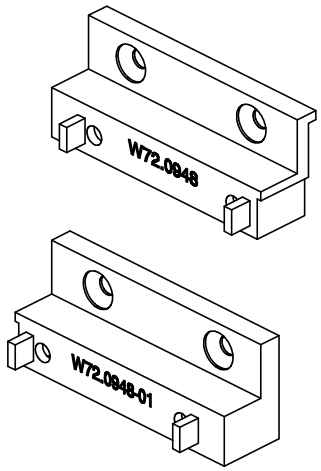	12950900	AYPC.W72.0948	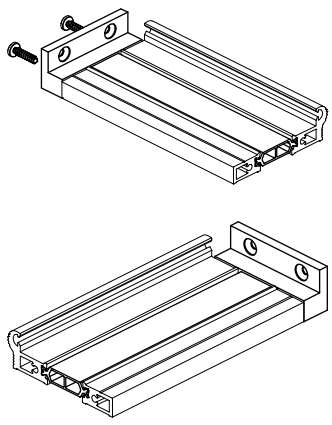 Threshold plug kit. Quantity in pack – 50 pcs

Image	Code	Article	Application
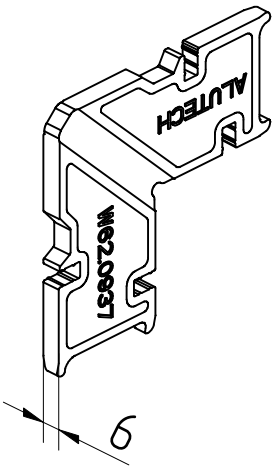	10829900	AYPC.W62.0937	Casted clamping corner. Quantity in pack – 60 pcs 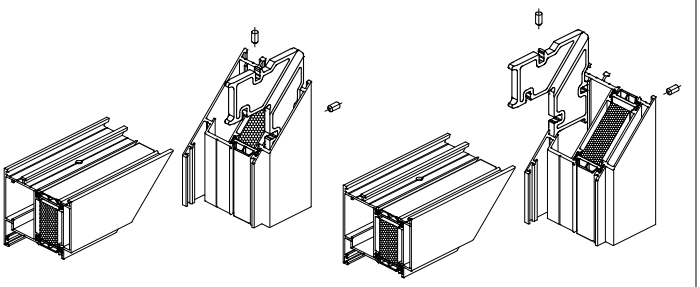 For frame/leaf profiles AYPC.W72.0104, AYPC.W72.0105 / AYPC.W72.0204, AYPC.W72.0205, AYPC.W72.0241, AYPC.W72.0242, AYPC.W72.0214, AYPC.W72.0215, AYPC.W72.0243, AYPC.W72.0244
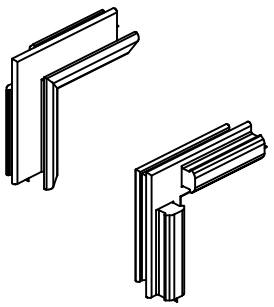	10830200	AYPC.W62.0977	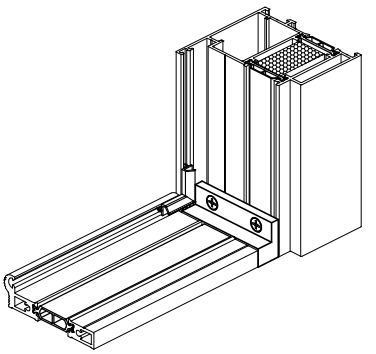 Rubber corner. Quantity in pack – 100 pcs
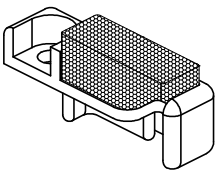	10839400	AYPC.W62.0988	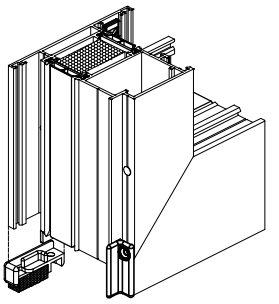 Door adjoining profile plug kit. Quantity in pack – 20 pcs Kit includes: AYPC.W62.0949 and AYPC.W62.0985
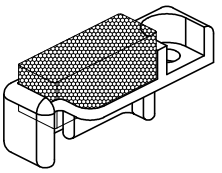	10839500	AYPC.W62.0988-01	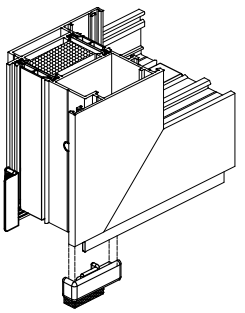 Door adjoining profile plug kit. Quantity in pack – 20 pcs Kit includes: AYPC.W62.0949-01 and AYPC.W62.0985

Image	Code	Article	Application
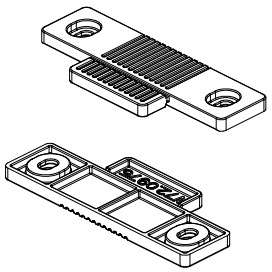	12951100	AYPC.W72.0975	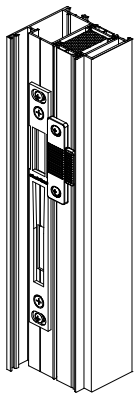 Strike plate. Quantity in pack – 50 pcs
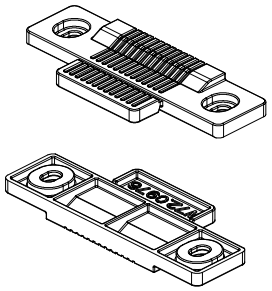	12951200	AYPC.W72.0976	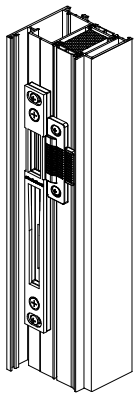 Strike plate. Quantity in pack – 50 pcs
	10462000	AYPC.C43.0913	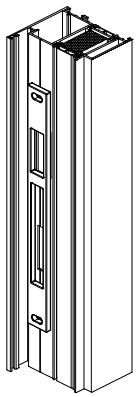 Support. Quantity in pack – 50 pcs

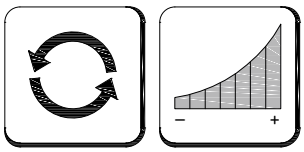

Option 1

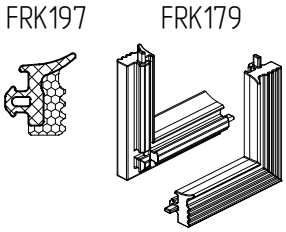

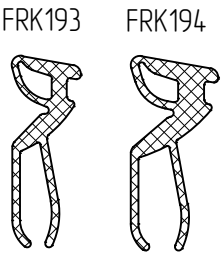

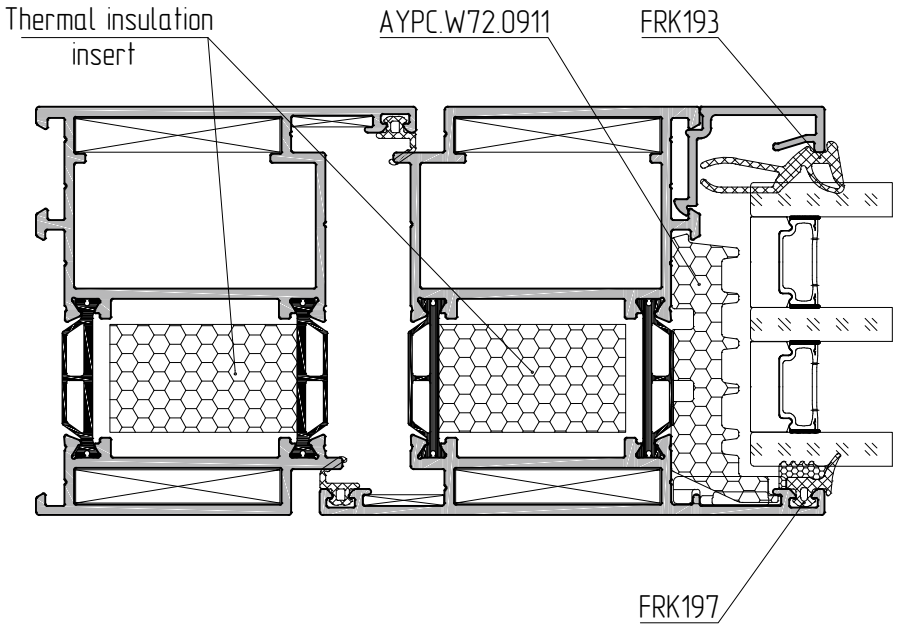

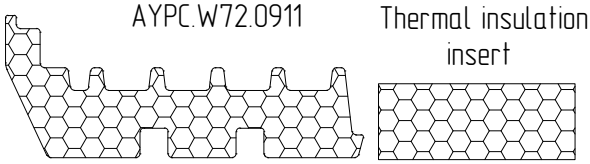

Option 2

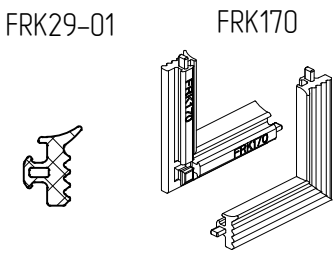

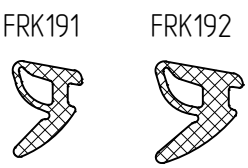

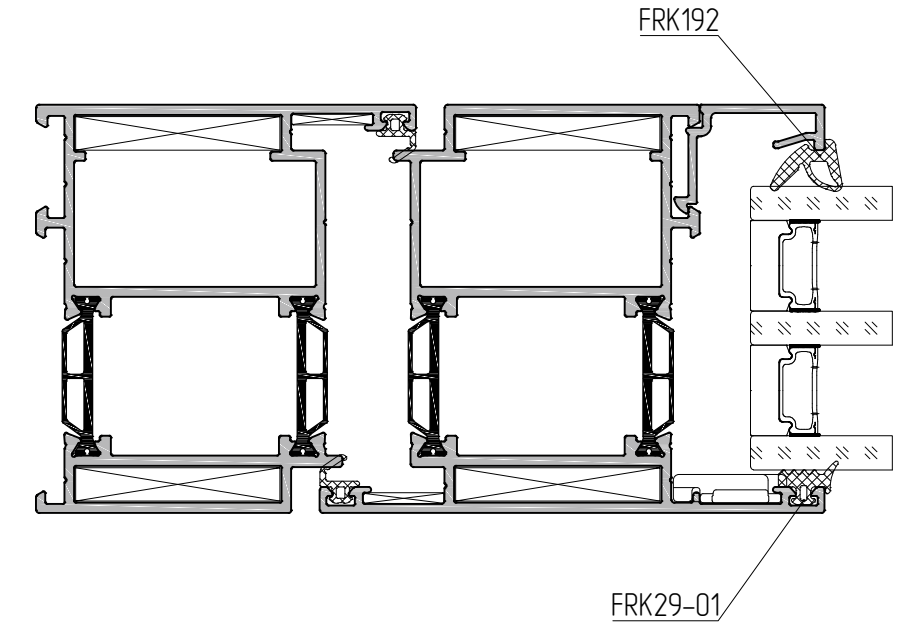

U-value calculations

Calculation results of thermal transmission coefficient of AYPC.W72 profiles in Flixo pro 7 (7.0.628.1) complex with space filling in seam infill unit area
with thermal insulation inserts.
Option 1 . Joint solution: AYPC.W72.0104 frame profile / AYPC.W72.0204 leaf profile

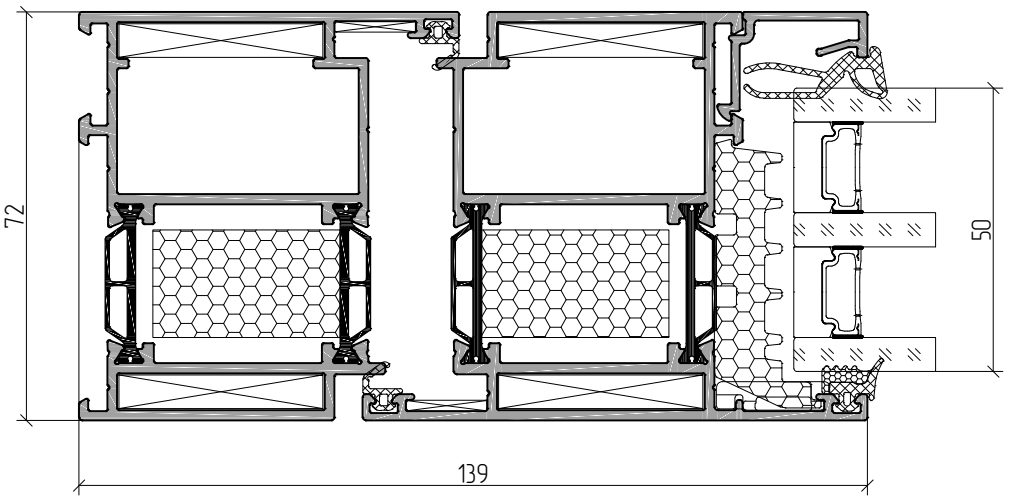

$$U_{f,A,B} = \frac{\frac{\Phi}{\Delta T} - U_p \cdot b_p}{b_f} = \frac{\frac{8,736}{20,000} - 0,626 \cdot 0,237}{0,108} = 2,08\ W/(m^2 \cdot K)$$

Calculation results of thermal transmission coefficient of AYPC.W72 profiles in Flixo pro 7 (7.0.628.1) complex without space filling in seam infill unit area with thermal insulation inserts.
Option 2. Joint solution: AYPC.W72.0104N frame profile / AYPC.W72.0204N leaf profile

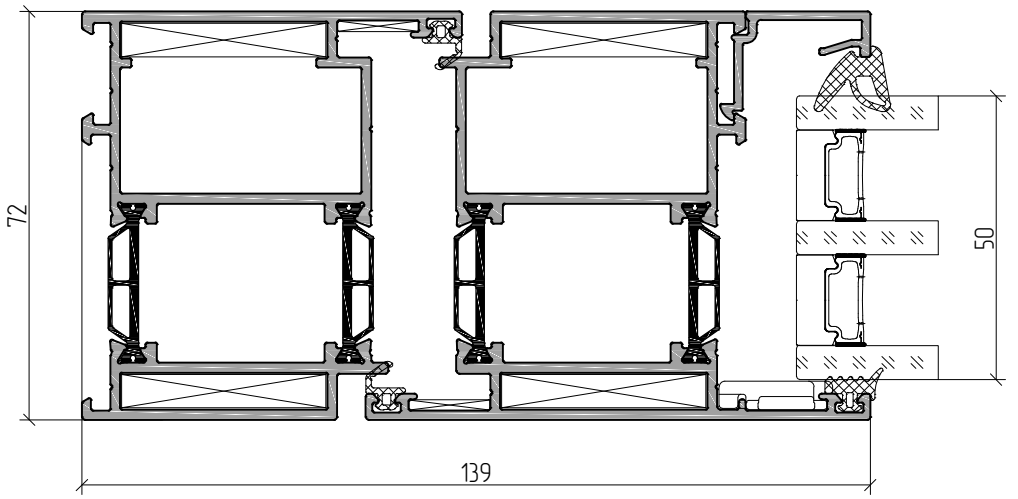

$$U_{f,A,B} = \frac{\frac{\Phi}{\Delta T} - U_p \cdot b_p}{b_f} = \frac{\frac{10,867}{20,000} - 0,626 \cdot 0,237}{0,139} = 2,84\ W/(m^2 \cdot K)$$

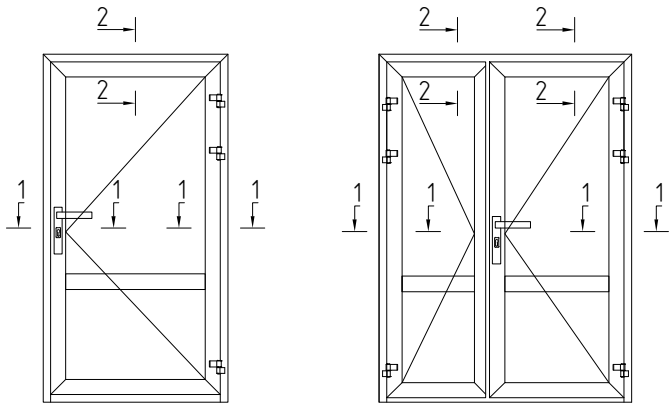

Scale 1:2

1–1

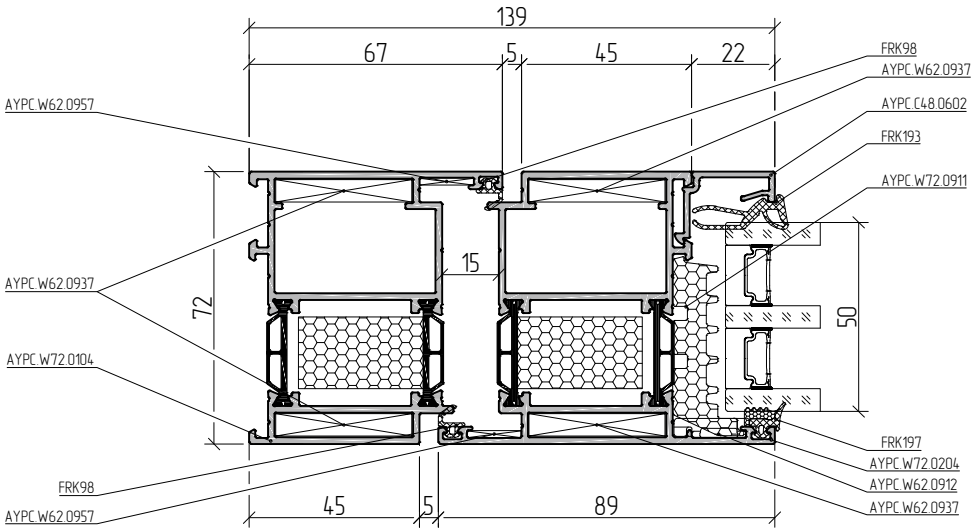

2–2

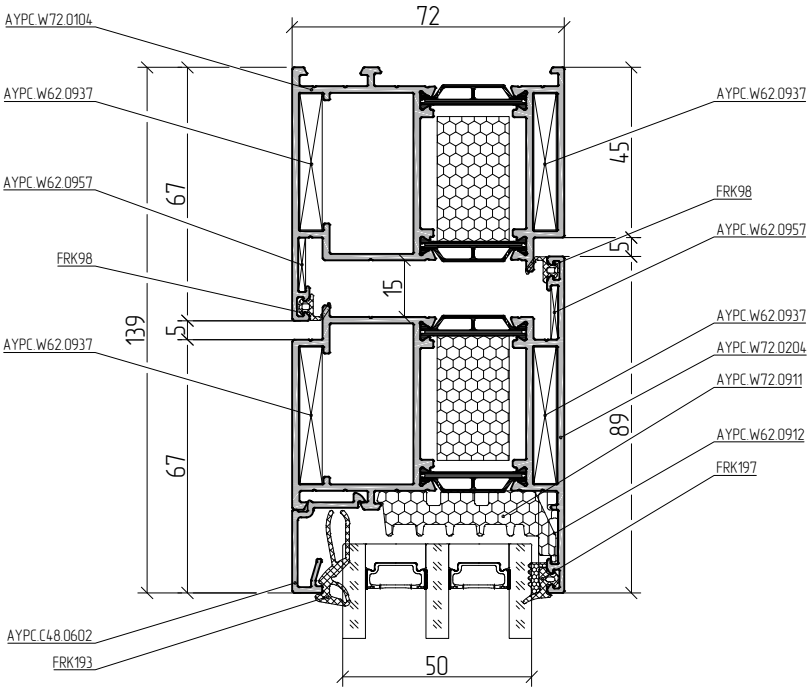

Scale 1:2

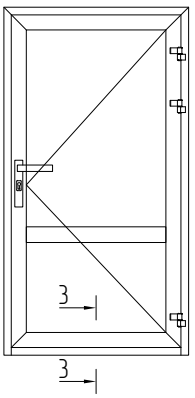

3–3

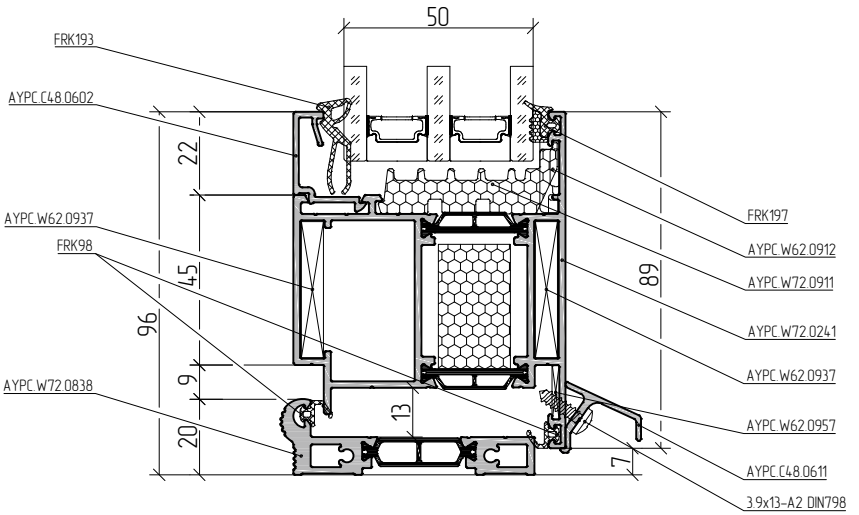

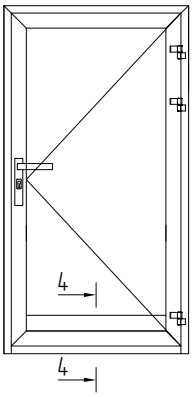

4–4

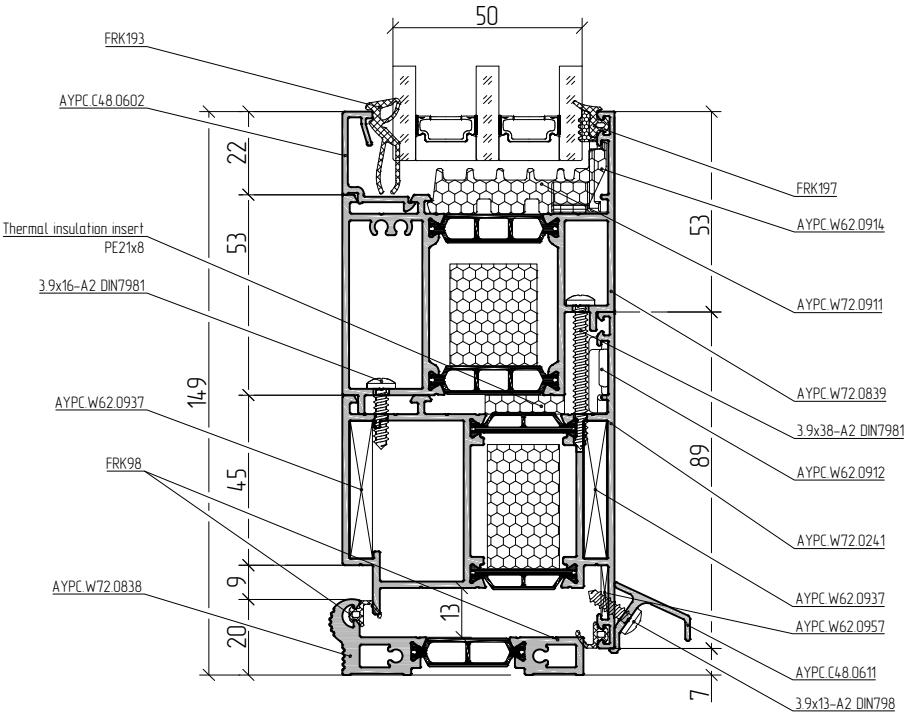

Scale 1:2

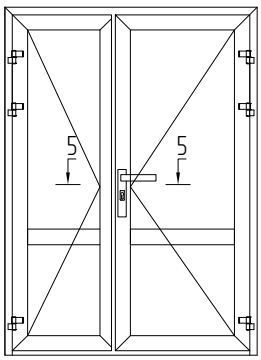
5
5

5–5

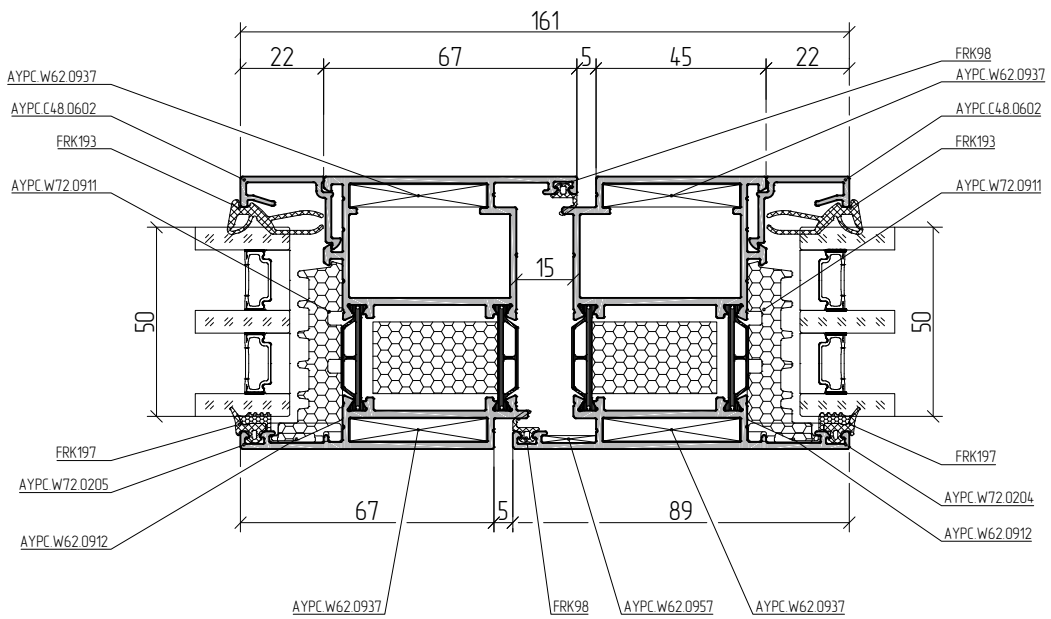
161
22
67
5
45
22
AYPC W62 0937
AYPC C48 0602
FRK193
AYPC W72 0911
FRK98
AYPC W62 0937
AYPC C48 0602
FRK193
AYPC W72 0911
15
50
50
FRK197
AYPC W72 0205
AYPC W62 0912
FRK197
AYPC W72 0204
AYPC W62 0912
67
5
89
AYPC W62 0937
FRK98
AYPC W62 0957
AYPC W62 0937

Scale 1:2

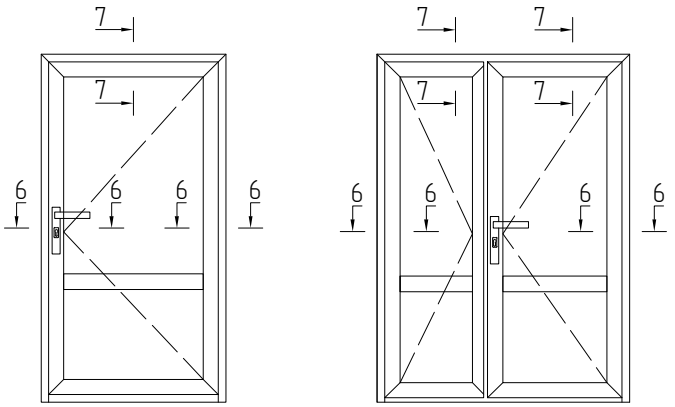

6–6

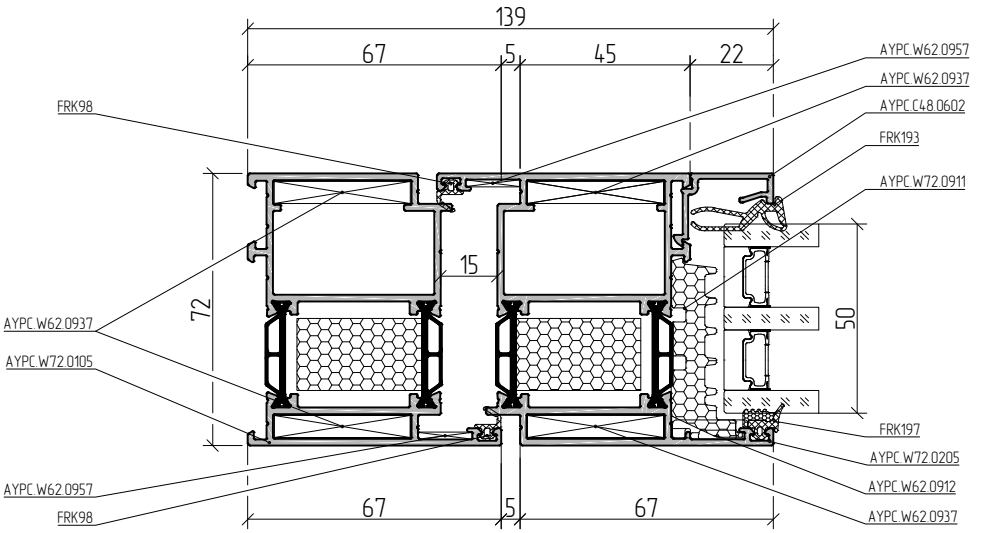

7–7

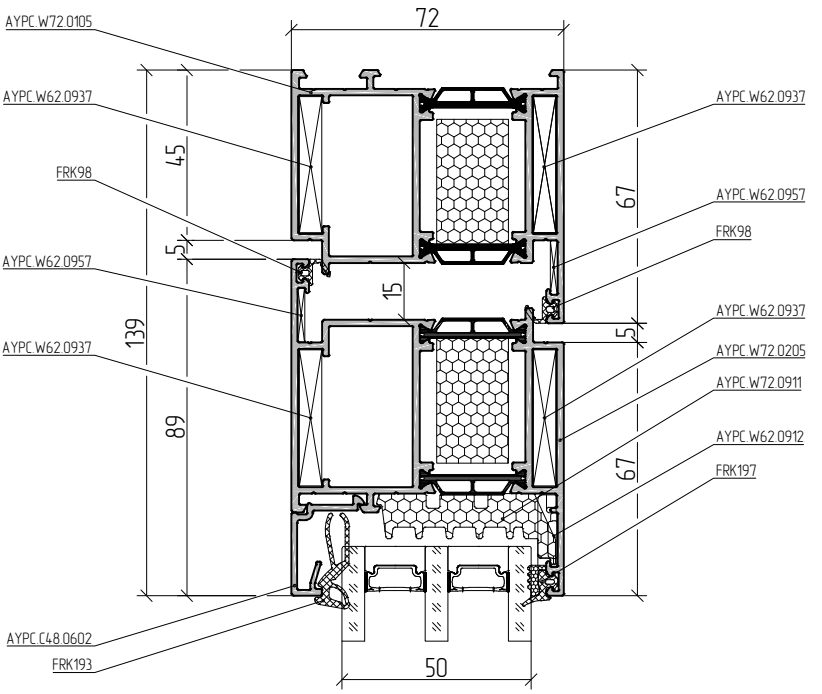

Scale 1:2

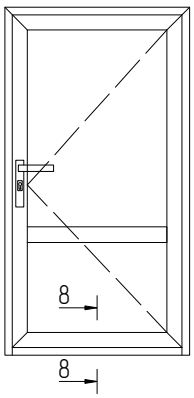

8–8

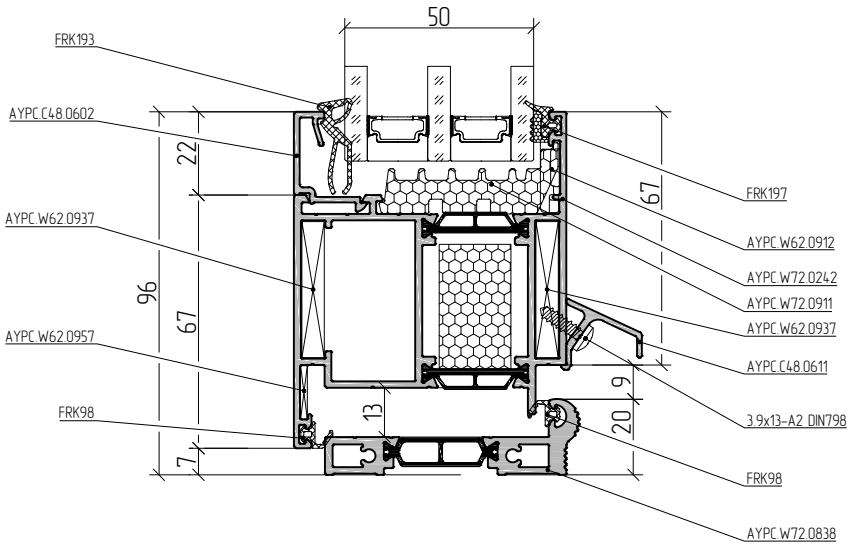

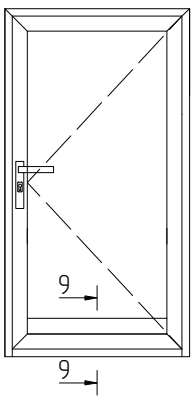

9–9

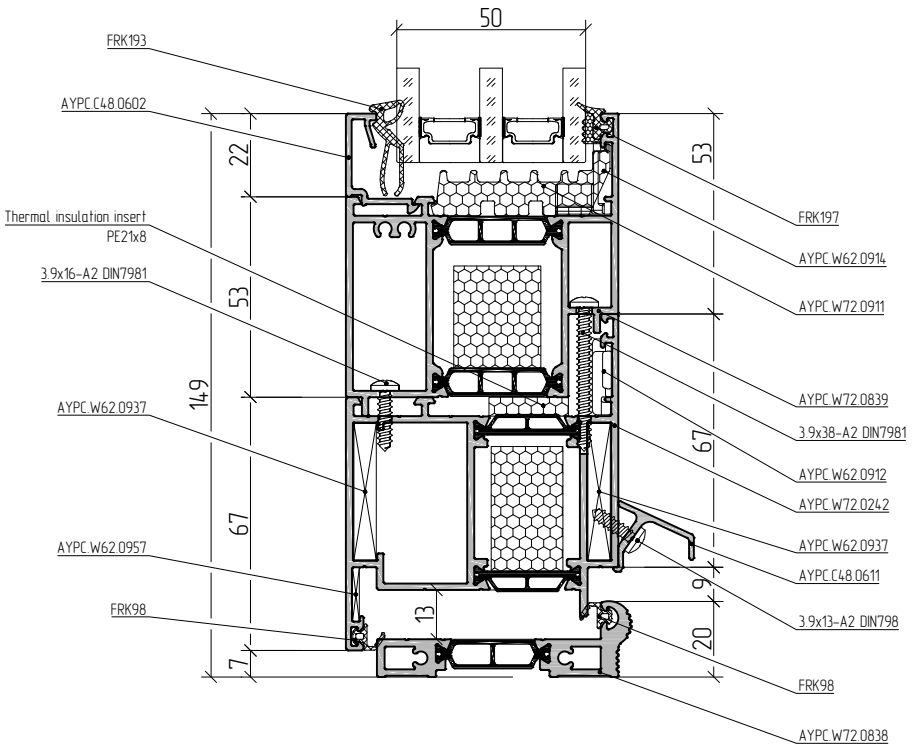

Scale 1:2

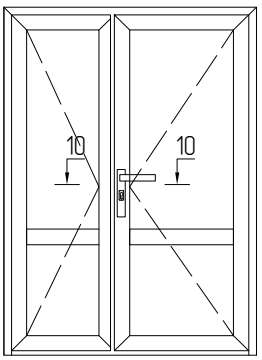

10–10

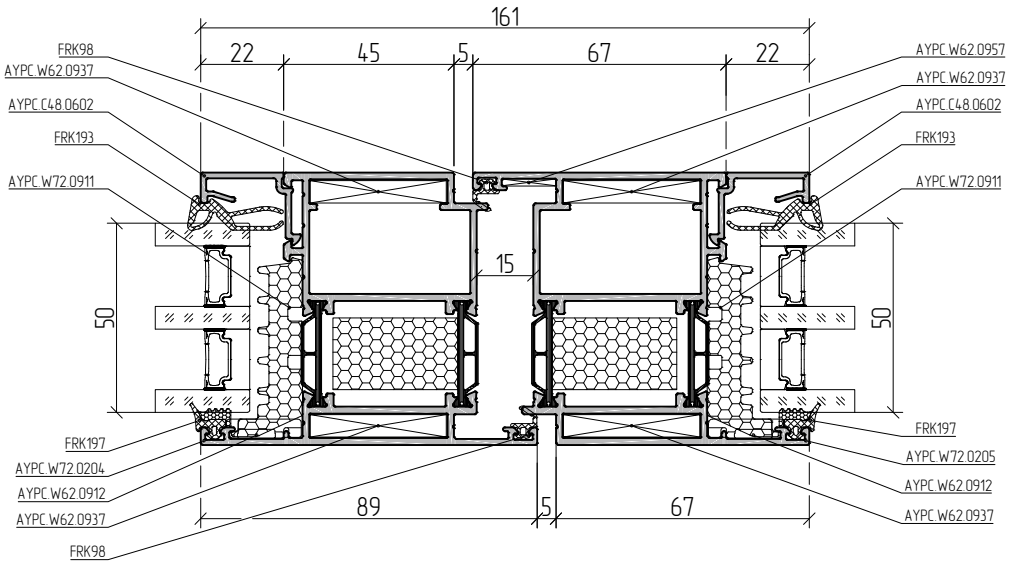

Example of outward opening single leaf door calculation

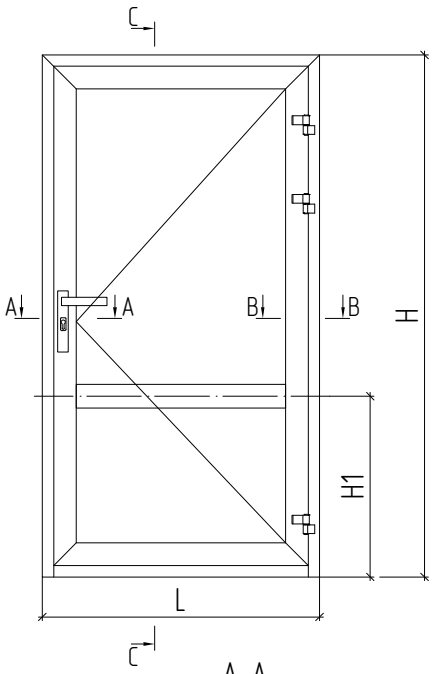

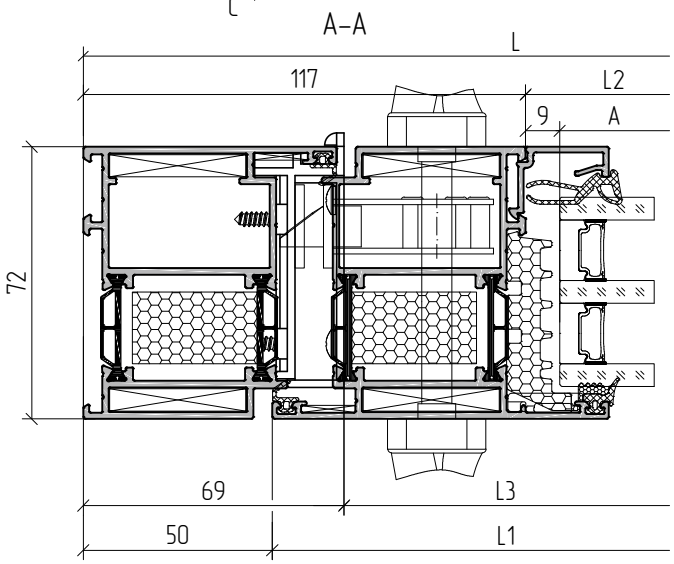

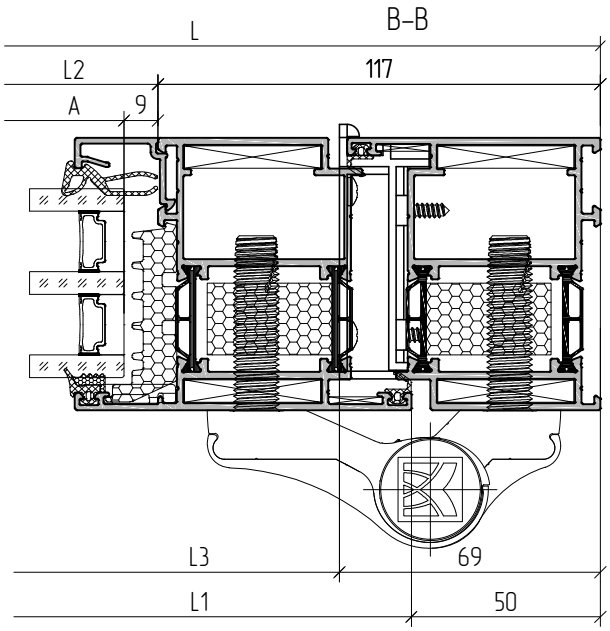

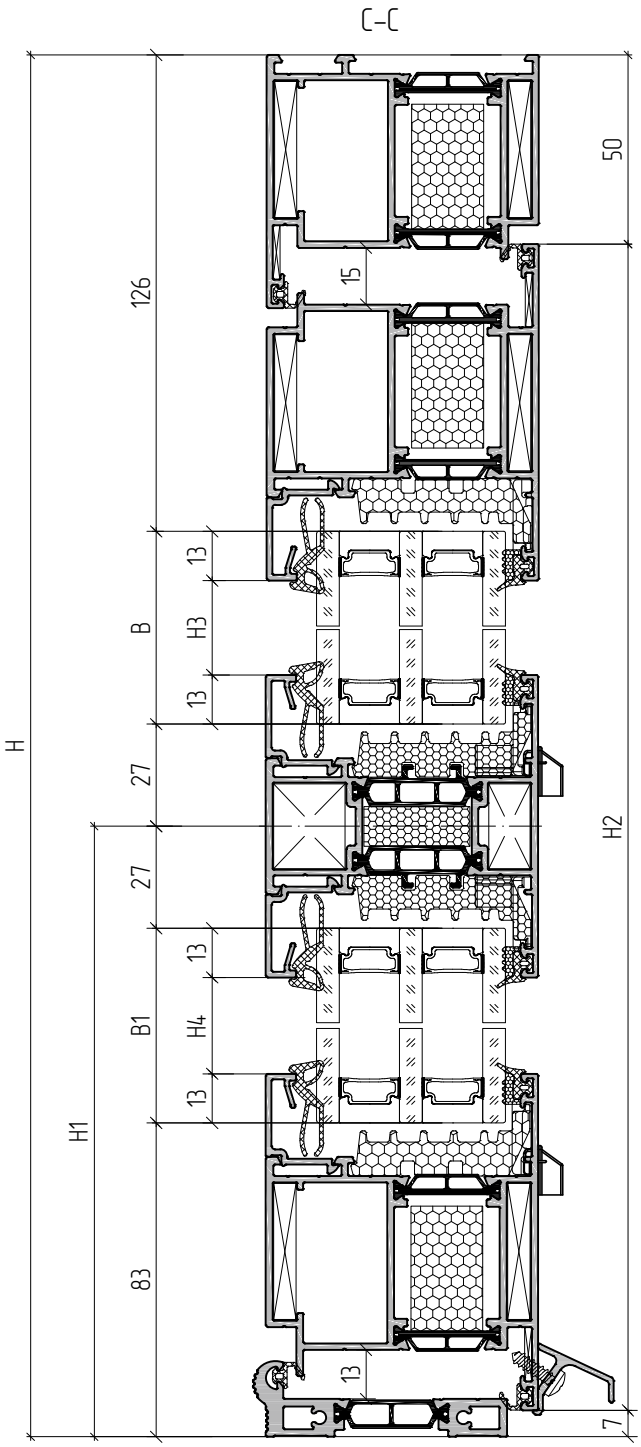

Example of outward opening single leaf door calculation

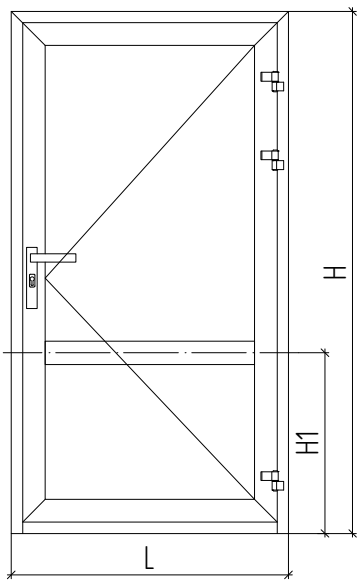

Article	Name Image	45°	L	1....
Profile				
AYPC.W72.0104	Frame profile		L	1
			H	1
			H	1
AYPC.W72.0204	Leaf profile		L1=L–100	1
			H2=H–57	2
AYPC.W72.0241	Leaf profile		* L1=L–100	1
AYPC.W72.0302	Transom bar profile		L2=L1–134	1
AYPC.W72.0838	Threshold profile		L3=L–138	1
AYPC.C48.0611	Drip bar		L4=L1–3	1
AYPC.C48.0602	Glass bead profile		L5=L2	4
			H3=H–H1–179	2
			H4=H1–136	2

Article	Name	Image	1....
Accessories			
AYPC.W62.0917	Bearing support		8
100x56x1(3)	Leveling support		8 (8)
AYPC.C48.0919M–01	Drain plug		4
AYPC.W62.0999	Kit of drip bar end plugs		1
AYPC.W62.0937	Clamping corner		12
AYPC.W62.0912	Plastic corner		4
Pin 5x10	Pin 5x10 DIN6325D		24
AYPC.W62.0913	Plastic corner		4
AYPC.W62.0957	Leveling corner		6
AYPC.W62.0973–01	Transom fixing element		2
AYPC.W62.0951–01	Transom fixing element		2
AYPC.W62.0916–01	Foamed support		2
AYPC.W72.0947	Threshold plug kit		1
AYPC.W72.0948	Threshold plug kit		1
3.9x13–A2 DIN7981	Self–tapping screw		L4/250
3.9x16–A2 DIN7981	Self–tapping screw		4
3.9x16–A2 DIN7982	Self–tapping screw		4

Article	Name	Image	L	1....
Gaskets				
FRK98	Rubber gasket		(L+H)x2+(L1+H2)x2	1
AYPC.W62.0977	Rubber corner			2
** FRK193	Rubber gasket		(A+B)x2+(A+B1)x2	1
** AYPC.W72.0911	Seam sealing		Ax4+Bx2+B1x2–8x100***	1
** FRK197	Rubber gasket		(A+B)x2+(A+B1)x2	1
** FRK179	Rubber corner			8
50 mm infill unit				
A=L1–152; B=H–H1–153				1
A=L1–152; B1=H1–110				1

1. Select articles of glass bead profiles and rubber gaskets depending on infill unit thickness (see section 01.04 – Table of glazing).
2. For profiles marked with * the subsequent machining is required (see section 04.06 – Profiles machining and assemblage).

** Other accessories are possible (see section 04.04 – Sections and junctions).

*** The quantity of removed AYPC.W72.0911 seam sealing depends on the type of opening and quantity of bearing supports

Calculation of outward opening single leaf door with basement profile

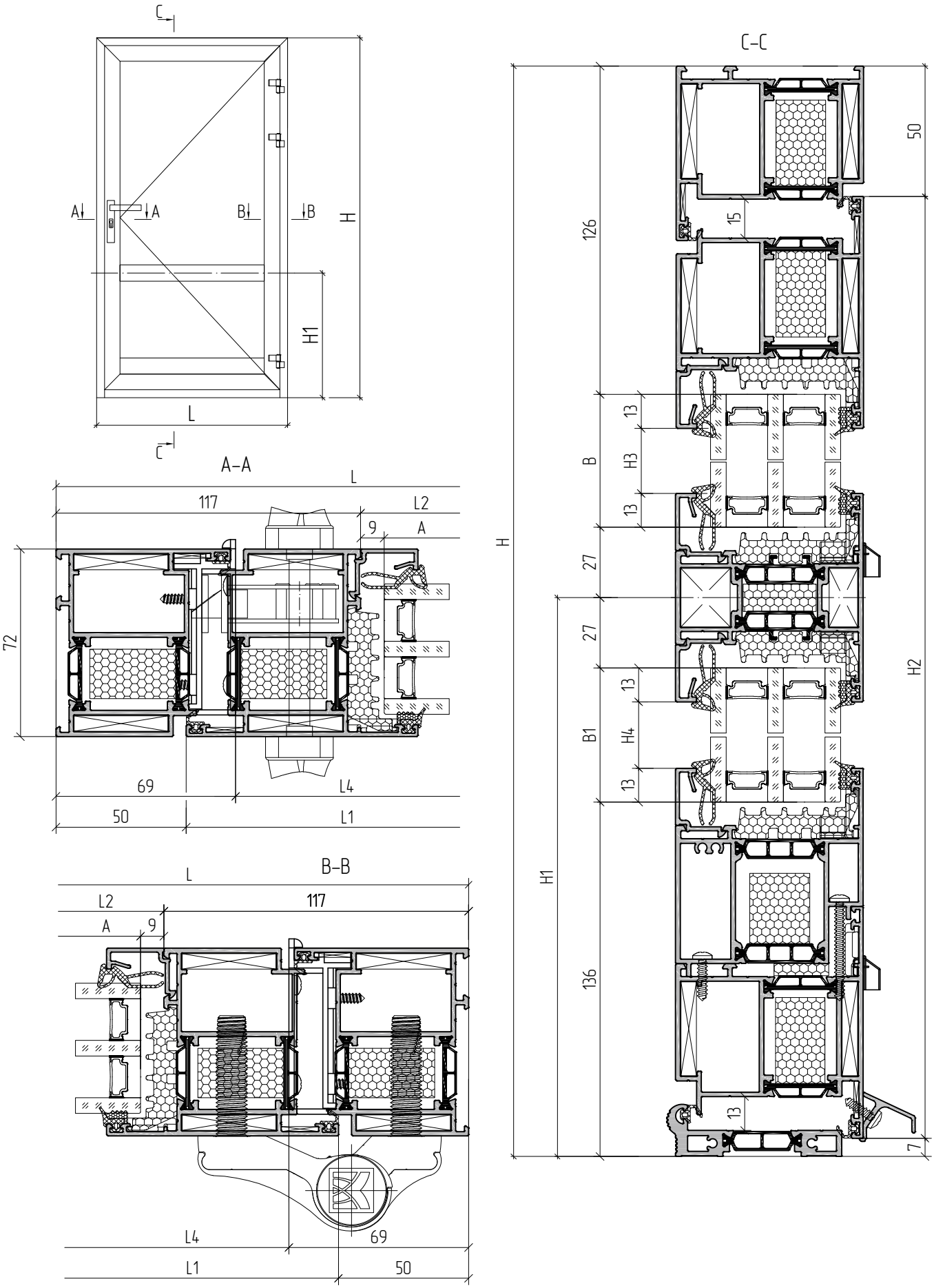

Calculation of outward opening single leaf door with basement profile

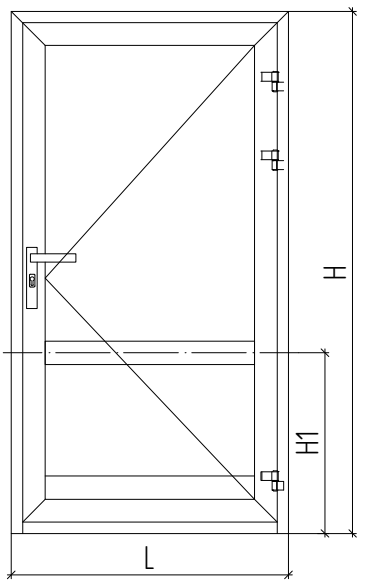

Article	Name Image	45°	L	1....
Profile				
AYPC.W72.0104	Frame profile		L	1
			H	1
			H	1
AYPC.W72.0204	Leaf profile		L1=L–100	1
			H2=H–57	2
AYPC.W72.0241	Leaf profile		* L1=L–100	1
AYPC.W72.0302	Transom bar profile		L2=L1–134	1
AYPC.W72.0839	Basement profile		L3=L2	1
AYPC.W72.0838	Threshold profile		L4=L–138	1
AYPC.C48.0611	Drip bar		L5=L1–3	1
AYPC.C48.0602	Glass bead profile		L6=L2	4
			H3=H–H1–179	2
			H4=H1–189	2

Article	Name	Image	1....
Accessories			
AYPC.W62.0917	Bearing support		8
100x56x1(3)	Leveling support		8 (8)
AYPC.C48.0919M–01	Drain plug		4
AYPC.W62.0999	Kit of drip bar end plugs		1
AYPC.W62.0937	Clamping corner		12
AYPC.W62.0912	Plastic corner		4
Pin 5x10	Pin 5x10 DIN6325D		24
AYPC.W62.0913	Plastic corner		4
AYPC.W62.0957	Leveling corner		6
AYPC.W62.0973–01	Transom fixing element		2
AYPC.W62.0951–01	Transom fixing element		2
AYPC.W62.0916–01	Foamed support		2
AYPC.W62.0914	Corner plug kit		1
AYPC.W72.0947	Threshold plug kit		1
AYPC.W72.0948	Threshold plug kit		1
3.9x13–A2 DIN7981	Self–tapping screw		L5/250
3.9x16–A2 DIN7981	Self–tapping screw		4+L3/250
3.9x38–A2 DIN7981	Self–tapping screw		L3/250
3.9x16–A2 DIN7982	Self–tapping screw		4

Article	Name	Image	L	1....
Gaskets				
FRK98	Rubber gasket		(L+H)x2+(L1+H2)x2	1
AYPC.W62.0977	Rubber corner			2
** FRK193	Rubber gasket		(A+B)x2+(A+B1)x2	1
** AYPC.W72.0911	Seam sealing		Ax4+(B+B1)x2–8x100***	1
** FRK197	Rubber gasket		(A+B)x2+(A+B1)x2	1
** FRK179	Rubber corner			8
PE21x8	Thermal insulation insert		L3	1
50 mm infill unit				
A=L1–152; B=H–H1–153				1
A=L1–152; B1=H1–163				1

1. Select articles of glass bead profiles and rubber gaskets depending on infill unit thickness (see section 01.04 – Table of glazing).
2. For profiles marked with * the subsequent machining is required (see section 04.06 – Profiles machining and assemblage).

** Other accessories are possible (see section 04.04 – Sections and junctions).

*** The quantity of removed AYPC.W72.0911 seam sealing depends on the type of opening and quantity of bearing supports

Example of outward opening double leaf door calculation

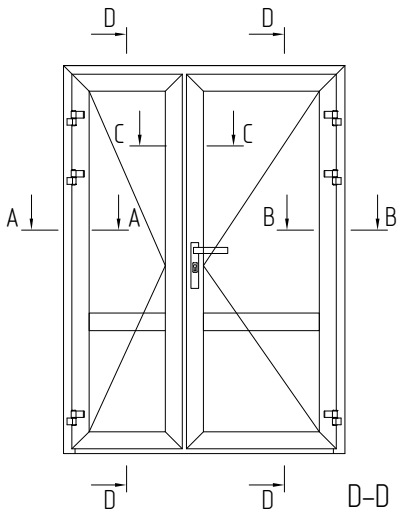

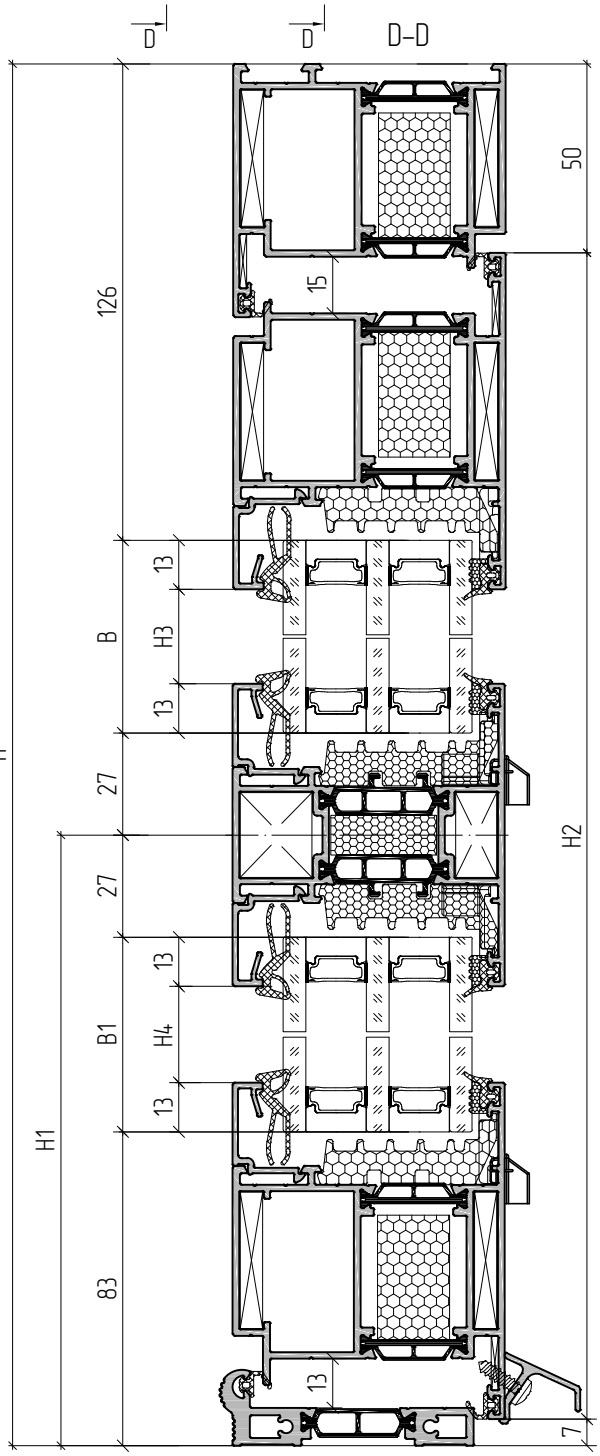

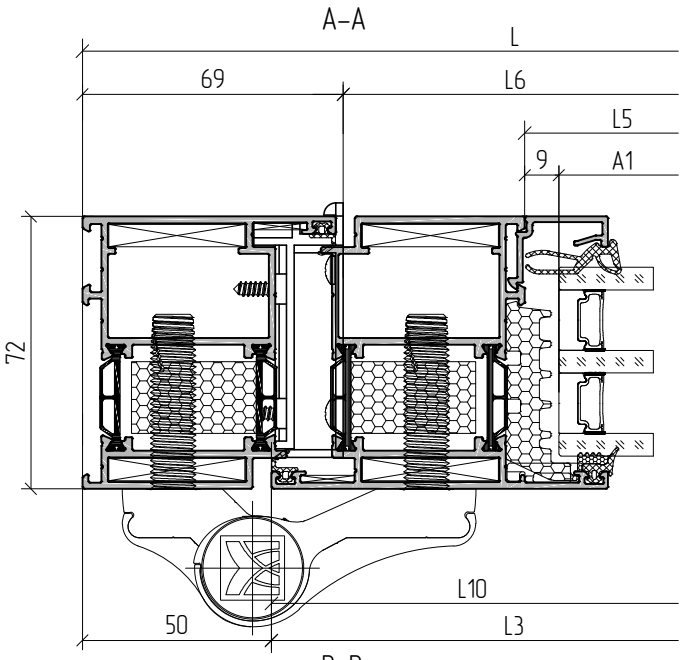

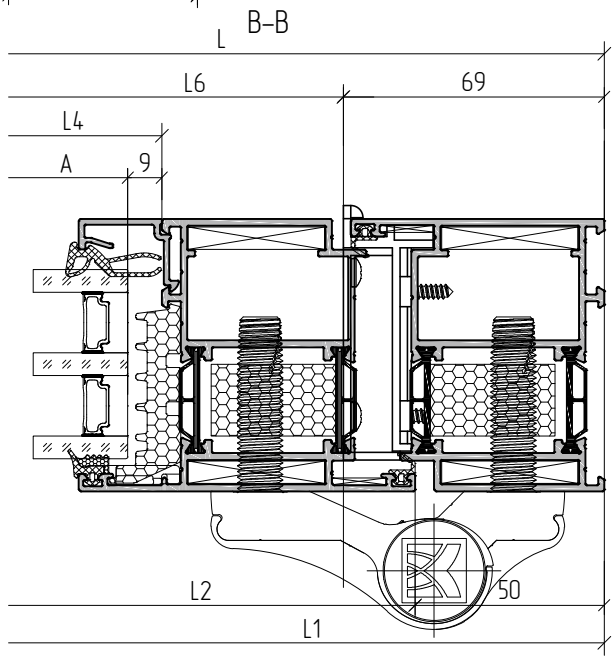

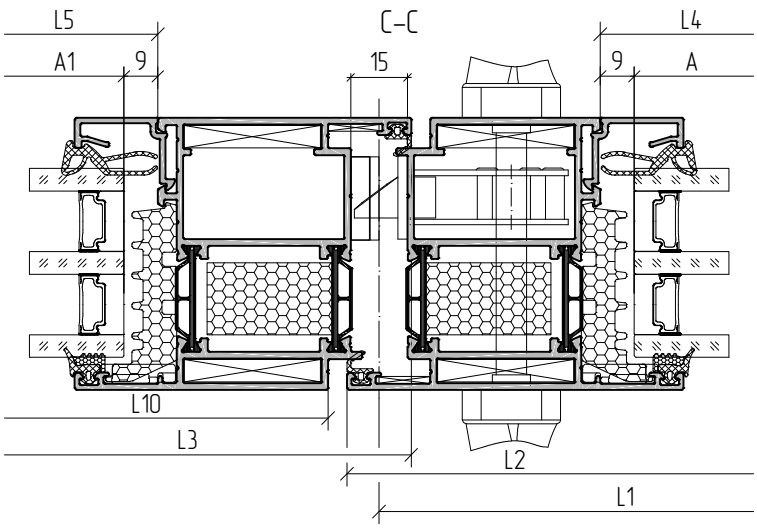

Example of outward opening double leaf door calculation

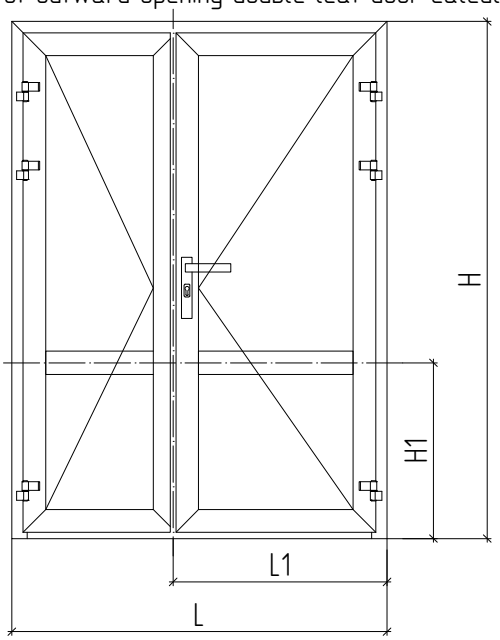

Article	Name	Image	1...
Accessories			
AYPC.W62.0917	Bearing support		16
100x56x1(3)	Leveling support		16 (16)
AYPC.C48.0919M-01	Drain plug		8
AYPC.W62.0999	Kit of drip bar end plugs		2
AYPC.W62.0937	Clamping corner		20
AYPC.W62.0912	Plastic corner		8
Pin 5x10	Pin 5x10 DIN6325D		40
AYPC.W62.0913	Plastic corner		8
AYPC.W62.0957	Leveling corner		8
AYPC.W62.0973-01	Transom fixing element		4
AYPC.W62.0951-01	Transom fixing element		4
AYPC.W62.0916-01	Foamed support		4
AYPC.W72.0947	Threshold plug kit		1
AYPC.W72.0948	Threshold plug kit		1
AYPC.C48.0906	Plug		2
AYPC.C48.0907	Plug		1
AYPC.W62.0988-01	Door adjoining plug kit		1
2.9x9.5-A2 DIN7982	Self-tapping screw		4
3.9x13-A2 DIN7981	Self-tapping screw		(L7+L8)/250
3.9x16-A2 DIN7981	Self-tapping screw		4
3.9x16-A2 DIN7982	Self-tapping screw		4

Article	Name Image	45°	L	1...
Profile				
AYPC.W72.0104	Frame profile		L	1
			H	1
			H	1
AYPC.W72.0204	Leaf profile		L2=L1-41.5	2
			H2=H-57	3
AYPC.W72.0205	Leaf profile		* H2=H-57	1
AYPC.W72.0241	Leaf profile		* L3=L-L1-41.5	2
AYPC.W72.0302	Transom bar profile		L4=L2-134	1
			L5=L3-134	1
AYPC.W72.0838	Threshold profile		L6=L-138	1
AYPC.C48.0611	Drip bar		L7=L2-3	1
			L8=L3-25	1
AYPC.C48.0602	Glass bead profile		L9=L4	4
			L10=L5	4
			H3=H-H1-179	4
			H4=H1-136	4

Article	Name	Image	L	1...
Gaskets				
FRK98	Rubber gasket		(H+L2+L3)x2+Lx2+H2x4	1
AYPC.W62.0977	Rubber corner			2
** FRK193	Rubber gasket		(A+A1+B+B1)x4	1
** AYPC.W72.0911	Seam sealing		(A+A1+B+B1)x4-16x100***	1
** FRK197	Rubber gasket		(A+A1+B+B1)x4	1
** FRK179	Rubber corner			16
50 mm infill unit				
A=L2-152; B=H-H1-153				1
A=L2-152; B1=H1-110				1
A1=L3-152; B=H-H1-153				1
A1=L3-152; B1=H1-110				1

1. Select articles of glass bead profiles and rubber gaskets depending on infill unit thickness (see section 01.04 – Table of glazing).
2. For profiles marked with * the subsequent machining is required (see section 04.06 – Profiles machining and assemblage).

** Other accessories are possible (see section 04.04 – Sections and junctions).

*** The quantity of removed AYPC.W72.0911 seam sealing depends on the type of opening and quantity of bearing supports

Calculation of outward opening double leaf door with basement profile

See sections on page 04.05.08

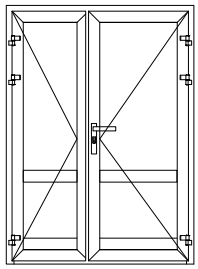

D–D

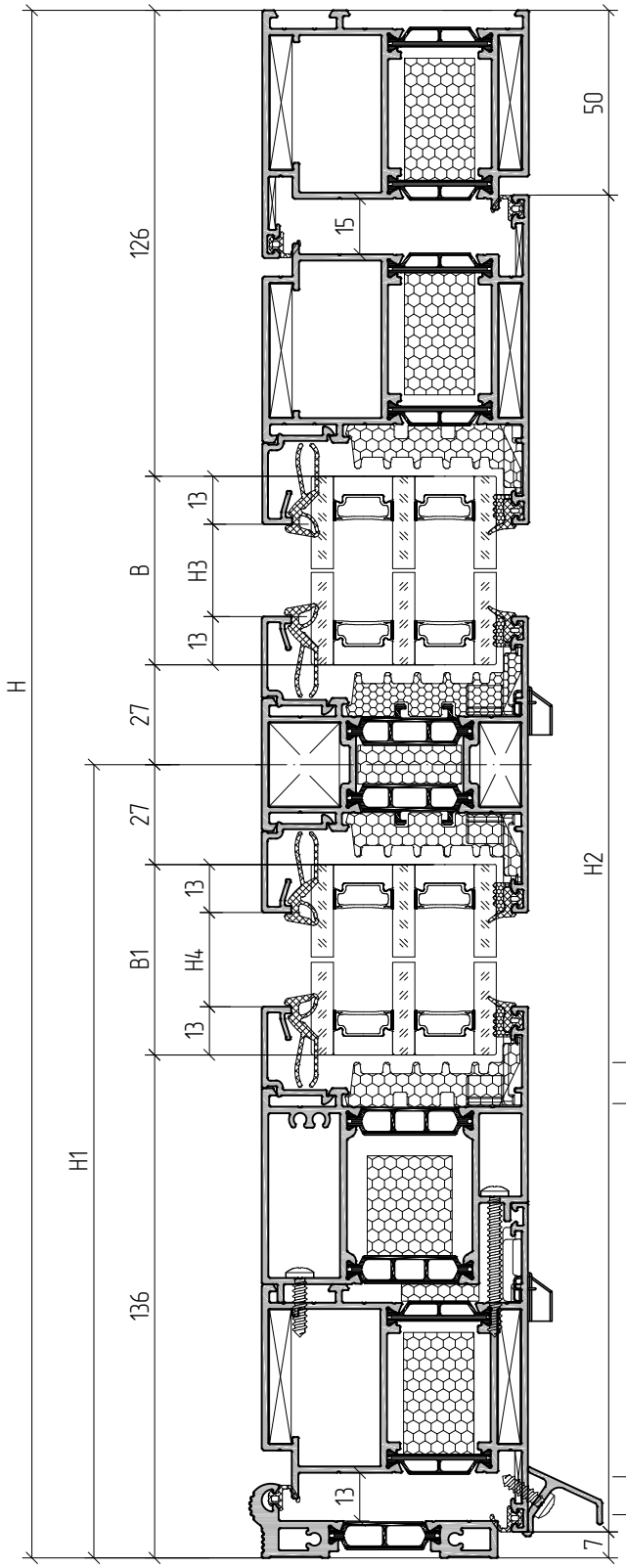

A–A

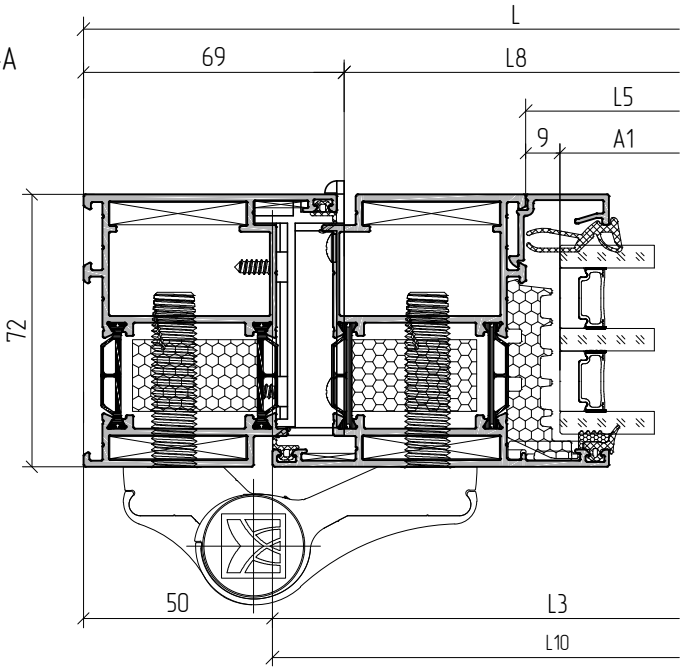

B–B

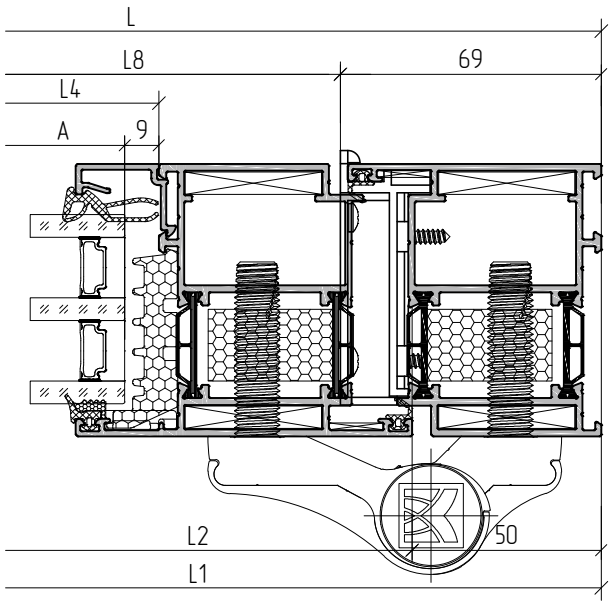

C–C

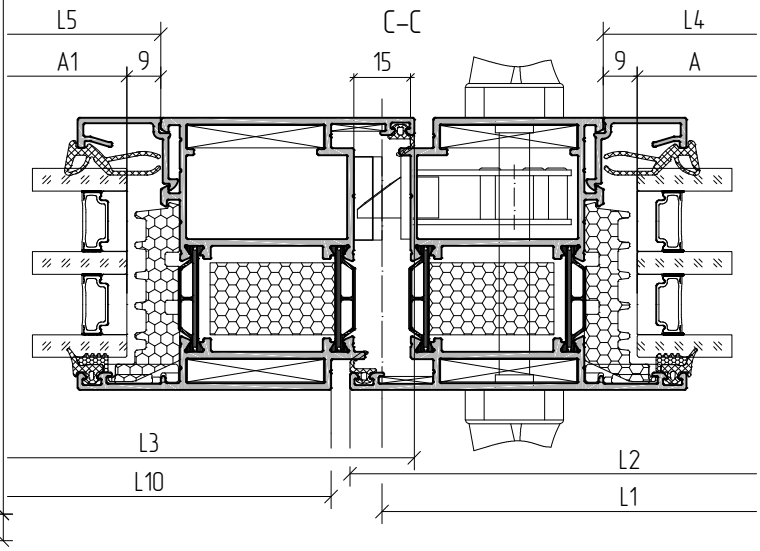

Calculation of outward opening double leaf door with basement profile

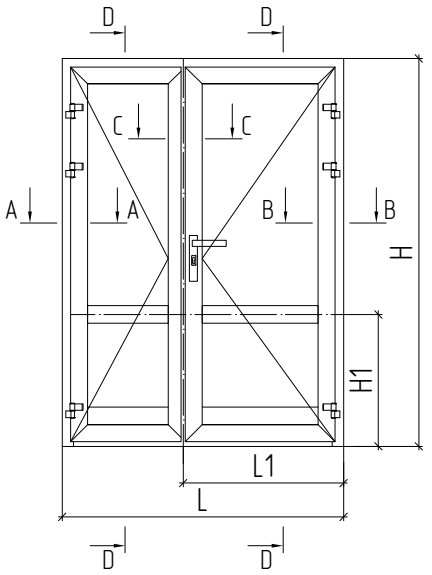

Article	Name	Image	1...
	Accessories		
AYPC.W62.0917	Bearing support		16
100x56x1(3)	Leveling support		16 (16)
AYPC.C48.0919M-01	Drain plug		8
AYPC.W62.0999	Kit of drip bar end plugs		2
AYPC.W62.0937	Clamping corner		20
AYPC.W62.0912	Plastic corner		8
Pin 5x10	Pin 5x10 DIN6325D		40
AYPC.W62.0913	Plastic corner		8
AYPC.W62.0957	Leveling corner		8
AYPC.W62.0973-01	Transom fixing element		4
AYPC.W62.0951-01	Transom fixing element		4
AYPC.W62.0916-01	Foamed support		4
AYPC.W62.0914	Corner plug kit		2
AYPC.W72.0947	Threshold plug kit		1
AYPC.W72.0948	Threshold plug kit		1
AYPC.C48.0906	Plug		2
AYPC.C48.0907	Plug		1
AYPC.W62.0988-01	Door adjoining plug kit		1
2.9x9.5-A2 DIN7982	Self-tapping screw		4
3.9x13-A2 DIN7981	Self-tapping screw		(L9+L10)/250
3.9x16-A2 DIN7981	Self-tapping screw		4+(L6+L7)/250
3.9x38-A2 DIN7981	Self-tapping screw		(L6+L7)/250
3.9x16-A2 DIN7982	Self-tapping screw		4

50 mm infill unit	
A=L2-152; B=H-H1-153	1
A=L2-152; B1=H1-163	1
A1=L3-152; B=H-H1-153	1
A1=L3-152; B1=H1-163	1

Article	Name Image	45°	L	1...
	Profile			
AYPC.W72.0104	Frame profile		L	1
			H	1
			H	1
AYPC.W72.0204	Leaf profile		L2=L1-41.5	2
			H2=H-57	3
AYPC.W72.0205	Leaf profile		* H2=H-57	1
AYPC.W72.0241	Leaf profile		* L3=L-L1-41.5	2
AYPC.W72.0302	Transom bar profile		L4=L2-134	1
			L5=L3-134	1
AYPC.W72.0839	Basement profile		L6=L4	1
			L7=L5	1
AYPC.W72.0838	Threshold profile		L8=L-138	1
AYPC.C48.0611	Drip bar		L9=L2-3	1
			L10=L3-25	1
AYPC.C48.0602	Glass bead profile		L11=L4	4
			L12=L5	4
			H3=H-H1-179	4
			H4=H1-189	4

Article	Name	Image	L	1...
	Gaskets			
FRK98	Rubber gasket		(H+L2+L3)x2+Lx2+H2x4	1
AYPC.W62.0977	Rubber corner			2
** FRK193	Rubber gasket		(A+A1+B+B1)x4	1
** AYPC.W72.0911	Seam sealing		(A+A1+B+B1)x4-16x100***	1
** FRK197	Rubber gasket		(A+A1+B+B1)x4	1
** FRK179	Rubber corner			16
PE21x8	Thermal insulation insert		L6+L7	1

1. Select articles of glass bead profiles and rubber gaskets depending on infill unit thickness (see section 01.04 – Table of glazing).
2. For profiles marked with * the subsequent machining is required (see section 04.06 – Profiles machining and assemblage).

** Other accessories are possible (see section 04.04 – Sections and junctions).

*** The quantity of removed AYPC.W72.0911 seam sealing depends on the type of opening and quantity of bearing supports

Calculation of inward opening single leaf door with basement profile

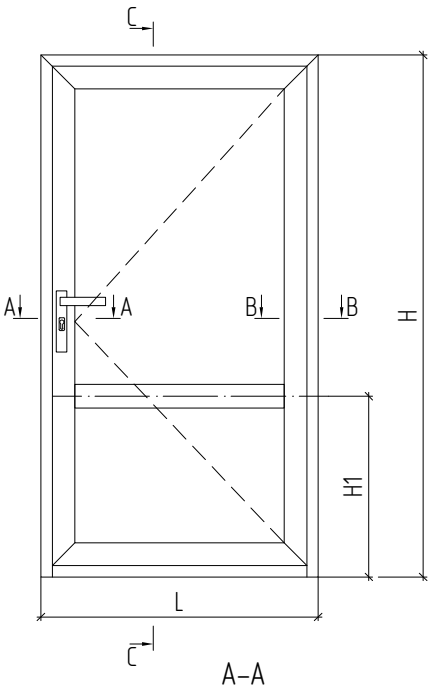

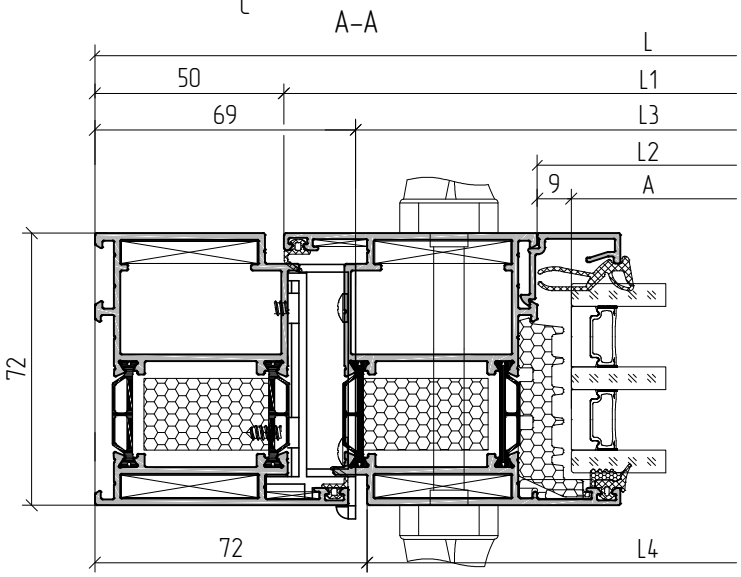

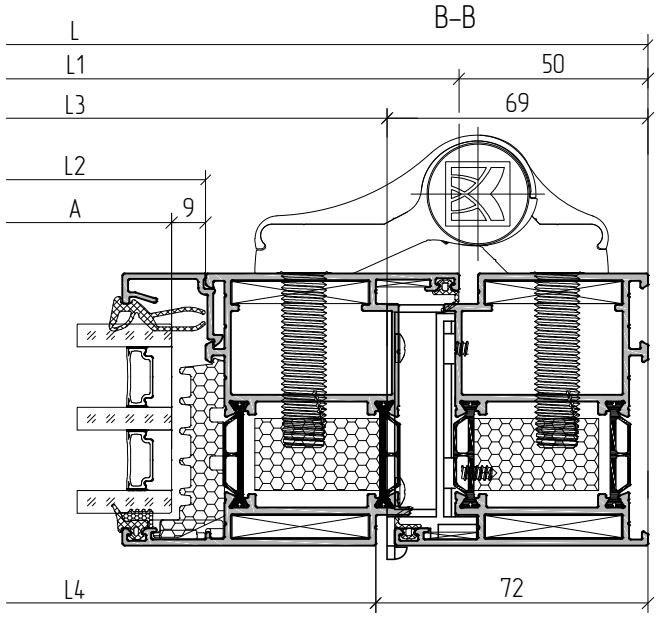

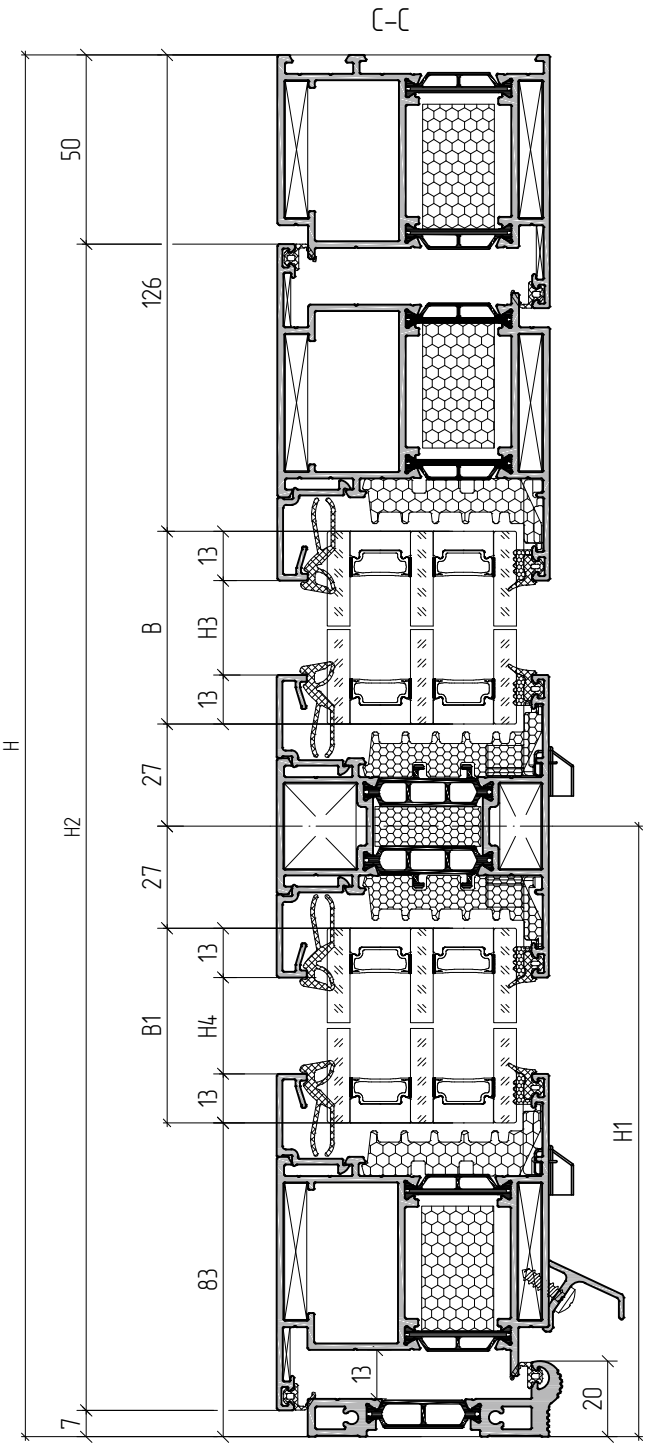

Calculation of inward opening single leaf door with basement profile

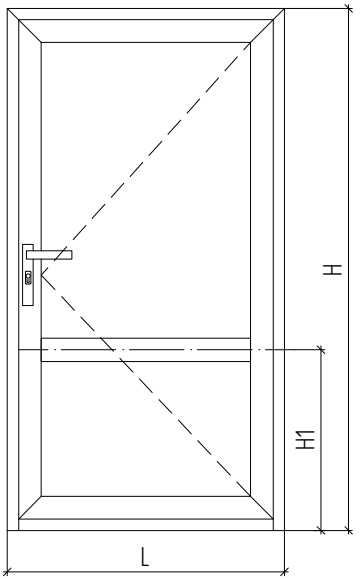

Article	Name Image	45°	L	1....
Profile				
AYPC.W72.0105	Frame profile		L	1
			H	1
			H	1
AYPC.W72.0205	Leaf profile		L1=L–100	1
			H2=H–57	2
AYPC.W72.0242	Leaf profile		* L1=L–100	1
AYPC.W72.0302	Transom bar profile		L2=L1–134	1
AYPC.W72.0838	Threshold profile		L3=L–138	1
AYPC.C48.0611	Drip bar		L4=L1–47	1
AYPC.C48.0602	Glass bead profile		L5=L2	4
			H3=H–H1–179	2
			H4=H1–136	2

Article	Name Image	1....
Accessories		
AYPC.W62.0917	Bearing support	8
100x56x1(3)	Leveling support	8 (8)
AYPC.C48.0919M–01	Drain plug	4
AYPC.W62.0999	Kit of drip bar end plugs	1
AYPC.W62.0937	Clamping corner	12
AYPC.W62.0912	Plastic corner	4
Pin 5x10	Pin 5x10 DIN6325D	24
AYPC.W62.0913	Plastic corner	4
AYPC.W62.0957	Leveling corner	6
AYPC.W62.0973–01	Transom fixing element	2
AYPC.W62.0951–01	Transom fixing element	2
AYPC.W62.0916–01	Foamed support	2
AYPC.W72.0947	Threshold plug kit	1
AYPC.W72.0948	Threshold plug kit	1
3.9x13–A2 DIN7981	Self–tapping screw	L4/250
3.9x16–A2 DIN7981	Self–tapping screw	4
3.9x16–A2 DIN7982	Self–tapping screw	4

Article	Name Image	L	1....
Gaskets			
FRK98	Rubber gasket	(L+H)x2+(L1+H2)x2	1
AYPC.W62.0977	Rubber corner		2
** FRK193	Rubber gasket	(A+B)x2+(A+B1)x2	1
** AYPC.W72.0911	Seam sealing	Ax4+(B+B1)x2–8x100***	1
** FRK197	Rubber gasket	(A+B)x2+(A+B1)x2	1
** FRK179	Rubber corner		8
50 mm infill unit			
A=L1–152; B=H–H1–153			1
A=L1–152; B1=H1–110			1

1. Select articles of glass bead profiles and gaskets depending on infill unit thickness (see part 01.04 – Table of glazing)
2. For profiles marked with * the subsequent machining is required (see the section 04.06 – Profiles machining and assemblage).

** Other accessories are possible (see the section 04.04 – Sections and junctions).

*** The quantity of removed AYPC.W72.0911 seam sealing depends on the type of opening and quantity of bearing supports

ALUTECH PROFILE SYSTEMS

Calculation of inward opening single leaf door with basement profile

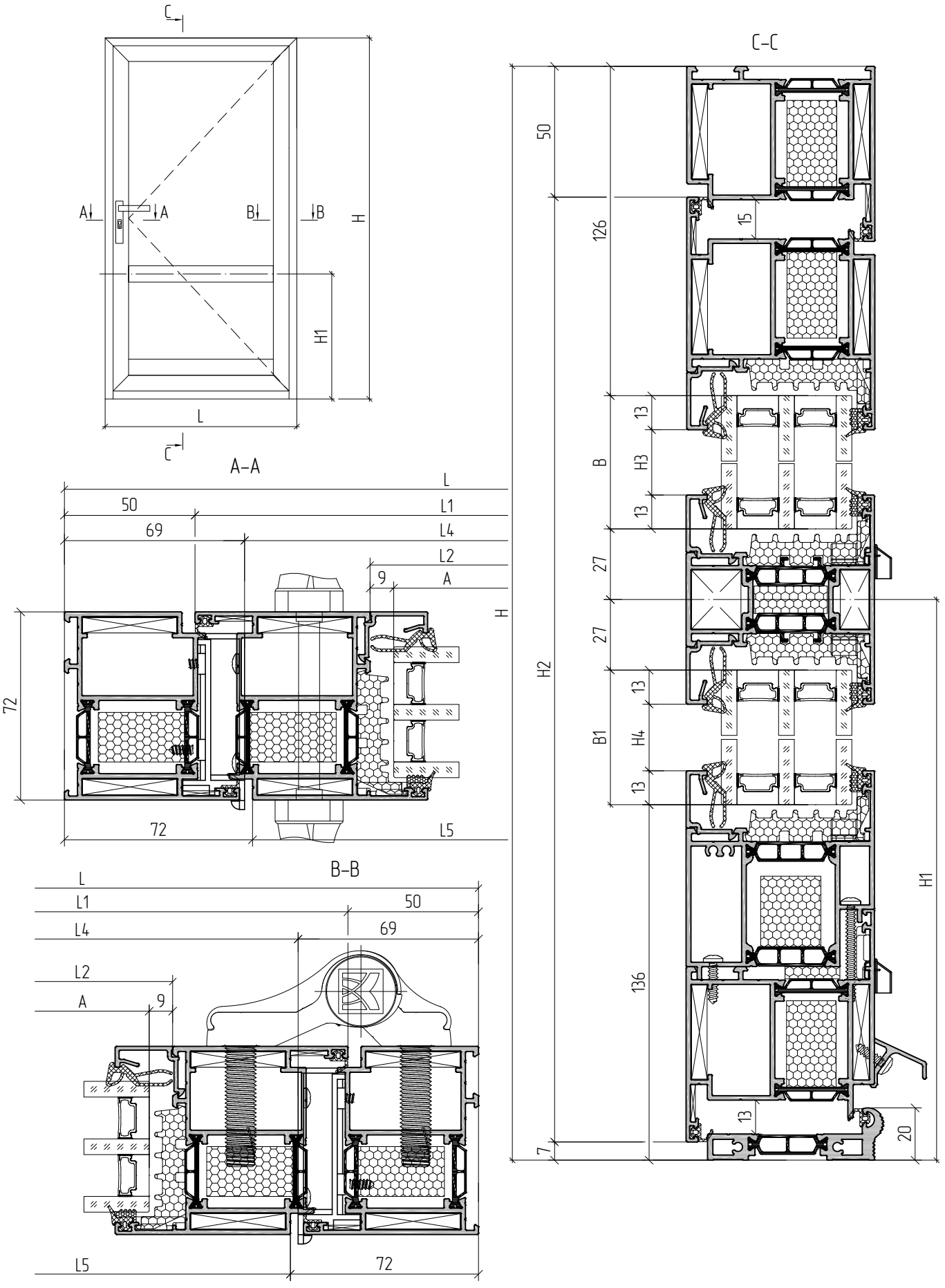

Calculation of inward opening single leaf door with basement profile

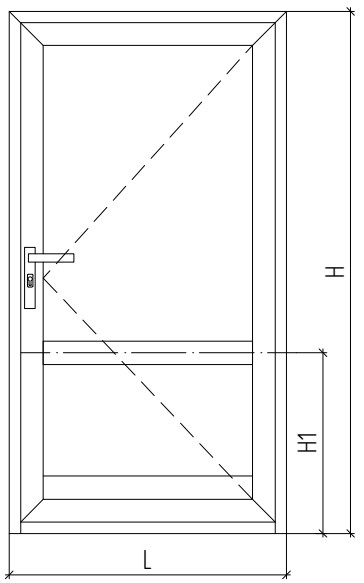

Article	Name Image	45°	L	1....
Profile				
AYPC.W72.0105	Frame profile		L	1
			H	1
			H	1
AYPC.W72.0205	Leaf profile		L1=L–100	1
			H2=H–57	2
AYPC.W72.0242	Leaf profile		* L1=L–100	1
AYPC.W72.0302	Transom bar profile		L2=L1–134	1
AYPC.W72.0839	Basement profile		L3=L2	1
AYPC.W72.0838	Threshold profile		L4=L–138	1
AYPC.C48.0611	Drip bar		L5=L1–47	1
AYPC.C48.0602	Glass bead profile		L6=L2	4
			H3=H–H1–179	2
			H4=H1–189	2

Article	Name	Image	1....
Accessories			
AYPC.W62.0917	Bearing support		8
100x56x1(3)	Leveling support		8 (8)
AYPC.C48.0919M–01	Drain plug		4
AYPC.W62.0999	Kit of drip bar end plugs		1
AYPC.W62.0937	Clamping corner		12
AYPC.W62.0912	Plastic corner		4
Pin 5x10	Pin 5x10 DIN6325D		24
AYPC.W62.0913	Plastic corner		4
AYPC.W62.0957	Leveling corner		6
AYPC.W62.0973–01	Transom fixing element		2
AYPC.W62.0951–01	Transom fixing element		2
AYPC.W62.0916–01	Foamed support		2
AYPC.W62.0914	Corner plug kit		1
AYPC.W72.0947	Threshold plug kit		1
AYPC.W72.0948	Threshold plug kit		1
3.9x13–A2 DIN7981	Self-tapping screw		L5/250
3.9x16–A2 DIN7981	Self-tapping screw		4+L3/250
3.9x38–A2 DIN7981	Self-tapping screw		L3/250
3.9x16–A2 DIN7982	Self-tapping screw		4

Article	Name	Image	L	1....
Gaskets				
FRK98	Rubber gasket		(L+H)x2+(L1+H2)x2	1
AYPC.W62.0977	Rubber corner			2
** FRK193	Rubber gasket		(A+B)x2+(A+B1)x2	1
** AYPC.W72.0911	Seam sealing		Ax4+(B+B1)x2–8x100***	1
** FRK197	Rubber gasket		(A+B)x2+(A+B1)x2	1
** FRK179	Rubber corner			8
PE21x8	Thermal insulation insert		L3	1
50 mm infill unit				
A=L1–152; B=H–H1–153				1
A=L1–152; B1=H1–163				1

1. Select articles of glass bead profiles and gaskets depending on infill unit thickness (see part 01.04 – Table of glazing)
2. For profiles marked with * the subsequent machining is required (see the section 04.06 – Profiles machining and assemblage).

** Other accessories are possible (see the section 04.04 – Sections and junctions).

*** The quantity of removed AYPC.W72.0911 seam sealing depends on the type of opening and quantity of bearing supports

Calculation of inward opening double leaf door with basement profile

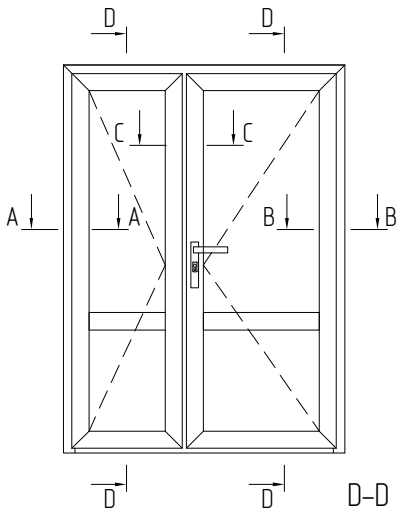

D–D

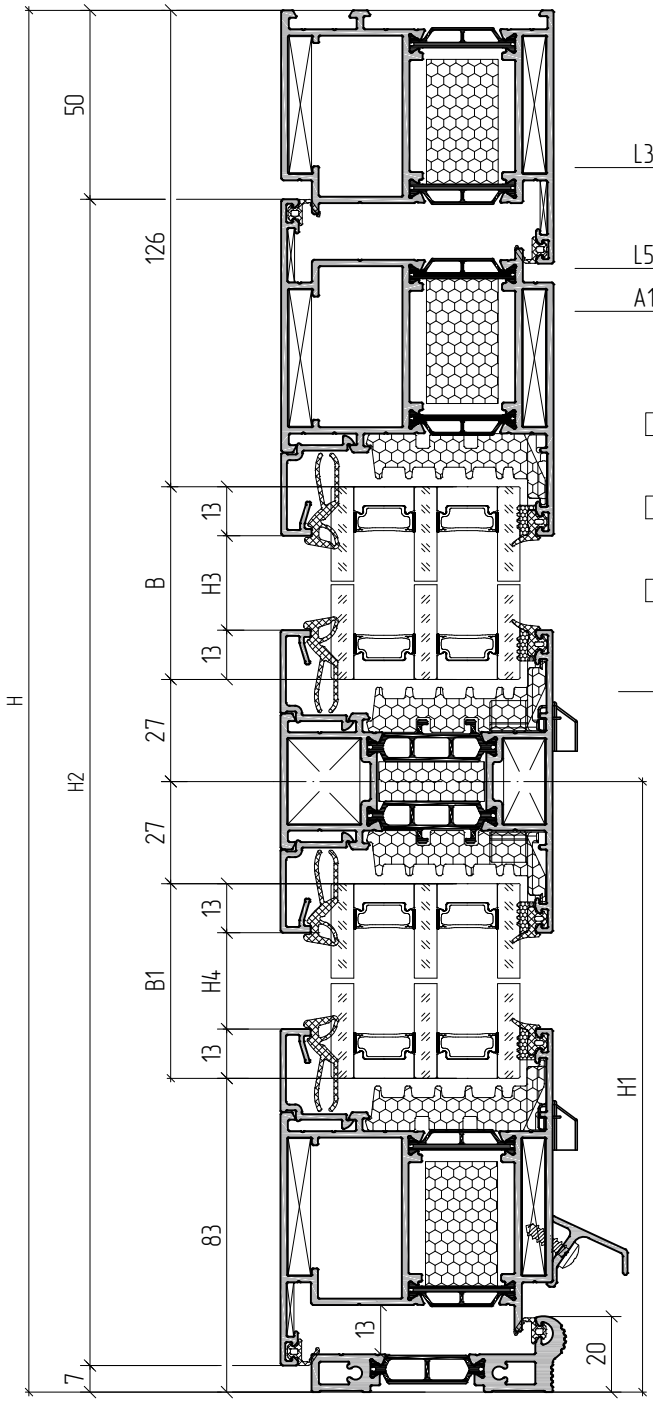

A–A

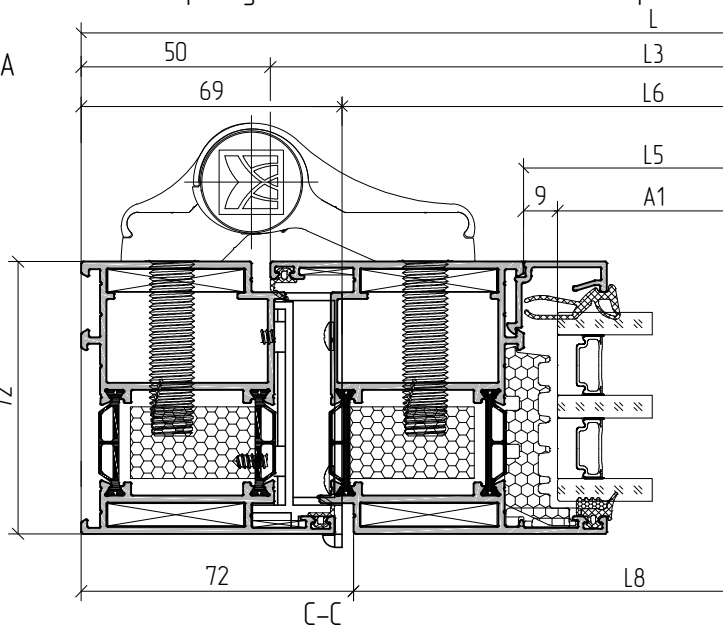

C–C

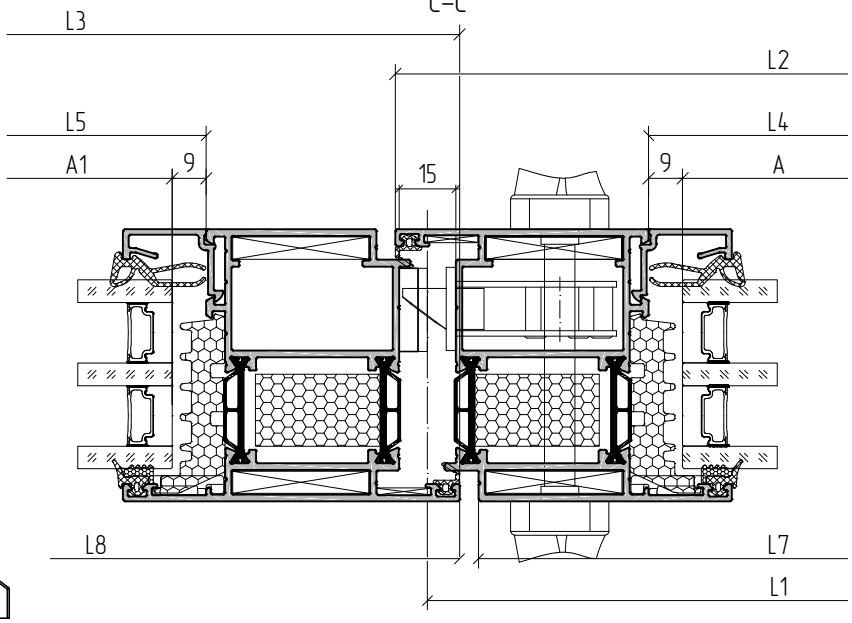

B–B

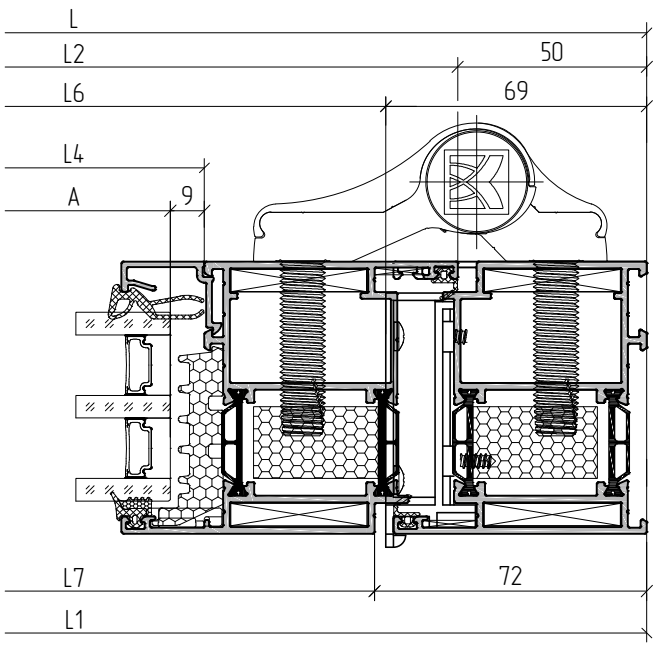

Calculation of inward opening double leaf door with basement profile

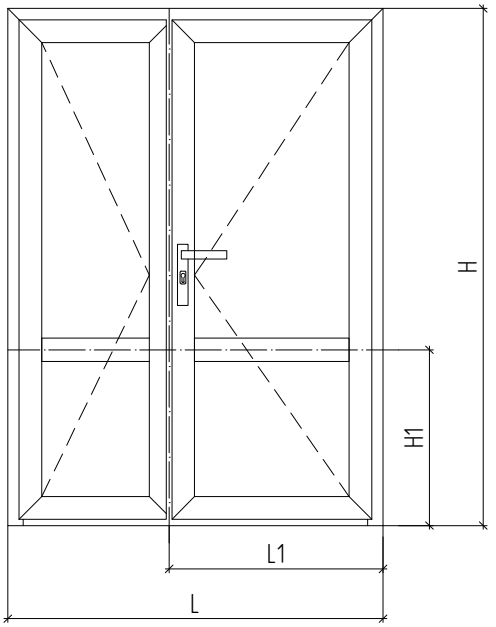

Article	Name Image	45°	L	1...
Profile				
AYPC.W72.0105	Frame profile		L	1
			H	1
			H	1
AYPC.W72.0205	Leaf profile		L2=L1-41.5	2
			H2=H-57	3
AYPC.W72.0204	Leaf profile		* H2=H-57	1
AYPC.W72.0242	Leaf profile		* L3=L-L1-41.5	2
AYPC.W72.0302	Transom bar profile		L4=L2-134	1
			L5=L3-134	1
AYPC.W72.0838	Threshold profile		L6=L-138	1
AYPC.C48.0611	Drip bar		L7=L2-47	1
			L8=L3-25	1
AYPC.C48.0602	Glass bead profile		L9=L4	4
			L10=L5	4
			H3=H-H1-179	4
			H4=H1-136	4

Article	Name	Image	1...
Accessories			
AYPC.W62.0917	Bearing support		16
100x56x1(3)	Leveling support		16 (16)
AYPC.C48.0919M-01	Drain plug		8
AYPC.W62.0999	Kit of drip bar end plugs		2
AYPC.W62.0937	Clamping corner		20
AYPC.W62.0912	Plastic corner		8
Pin 5x10	Pin 5x10 DIN6325D		40
AYPC.W62.0913	Plastic corner		8
AYPC.W62.0957	Leveling corner		8
AYPC.W62.0973-01	Transom fixing element		4
AYPC.W62.0951-01	Transom fixing element		4
AYPC.W62.0916-01	Foamed support		4
AYPC.W72.0947	Threshold plug kit		1
AYPC.W72.0948	Threshold plug kit		1
AYPC.C48.0906	Plug		1
AYPC.C48.0907	Plug		2
AYPC.W62.0988	Door adjoining profile plug		1
2.9x9.5-A2 DIN7982	Self-tapping screw		4
3.9x13-A2 DIN7981	Self-tapping screw		(L7+L8)/250
3.9x16-A2 DIN7981	Self-tapping screw		4
3.9x16-A2 DIN7982	Self-tapping screw		4

Article	Name	Image	L	1...
Gaskets				
FRK98	Rubber gasket		(H+L2+L3)x2+Lx2+H2x4	1
AYPC.W62.0977	Rubber corner			2
** FRK193	Rubber gasket		(A+A1+B+B1)x4	1
** AYPC.W72.0911	Seam sealing		(A+A1+B+B1)x4-16x100***	1
** FRK197	Rubber gasket		(A+A1+B+B1)x4	1
** FRK179	Rubber corner			16
50 mm infill unit				
A=L2-152; B=H-H1-153				1
A=L2-152; B1=H1-110				1
A1=L3-152; B=H-H1-153				1
A1=L3-152; B1=H1-110				1

1. Select articles of glass bead profiles and gaskets depending on infill unit thickness (see part 01.04 – Table of glazing)
2. For profiles marked with * the subsequent machining is required (see the section 04.06 – Profiles machining and assemblage).

** Other accessories are possible (see the section 04.04 – Sections and junctions).

*** The quantity of removed AYPC.W72.0911 seam sealing depends on the type of opening and quantity of bearing supports

ALUTECH PROFILE SYSTEMS

Calculation of inward opening double leaf door with basement profile

See sections on page 04.05.16

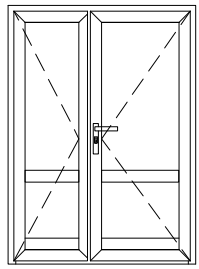

D–D

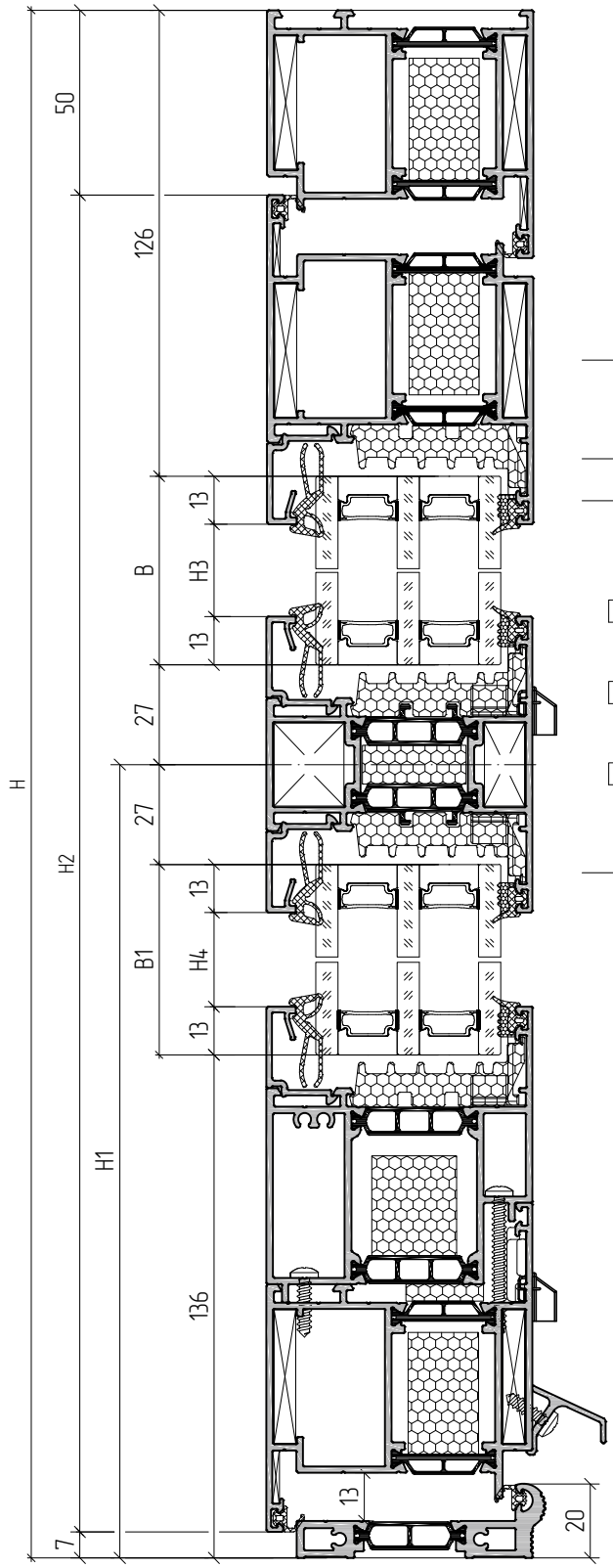

A–A

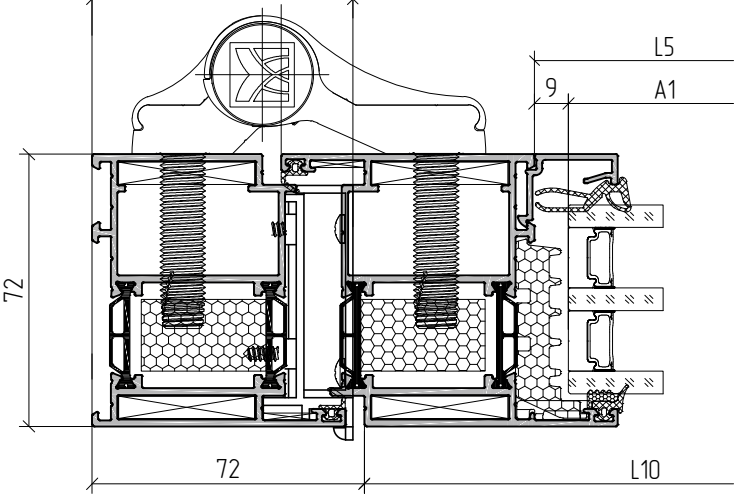

C–C

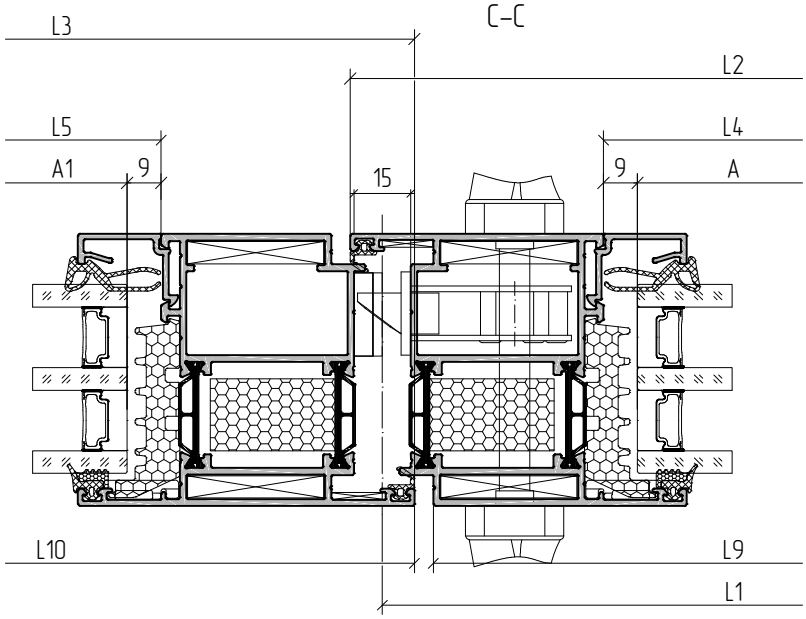

B–B

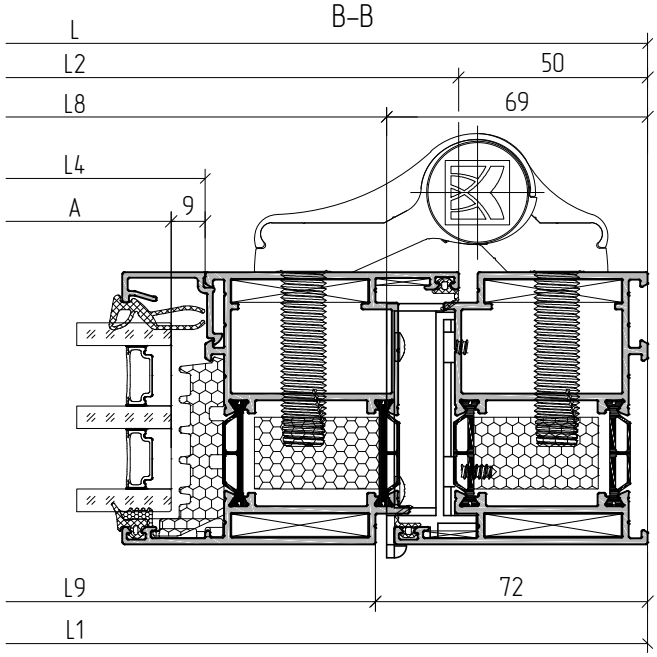

Calculation of inward opening double leaf door with basement profile

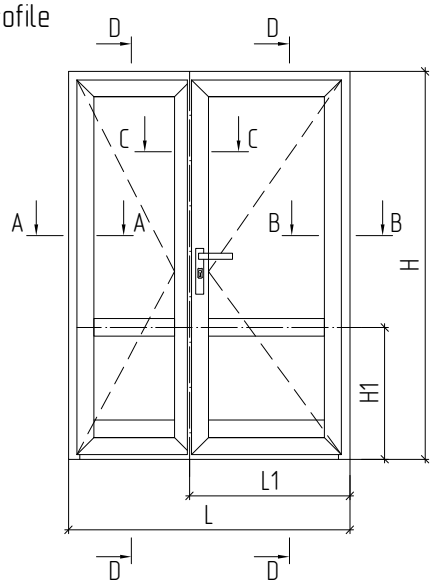

Article	Name	Image	1...
Accessories			
AYPC.W62.0917	Bearing support		16
100x56x1(3)	Leveling support		16 (16)
AYPC.C48.0919M-01	Drain plug		8
AYPC.W62.0999	Kit of drip bar end plugs		2
AYPC.W62.0937	Clamping corner		20
AYPC.W62.0912	Plastic corner		8
Pin 5x10	Pin 5x10 DIN6325D		40
AYPC.W62.0913	Plastic corner		8
AYPC.W62.0957	Leveling corner		8
AYPC.W62.0973-01	Transom fixing element		4
AYPC.W62.0951-01	Transom fixing element		4
AYPC.W62.0916-01	Foamed support		4
AYPC.W62.0914	Corner plug kit		2
AYPC.W72.0947	Threshold plug kit		1
AYPC.W72.0948	Threshold plug kit		1
AYPC.C48.0906	Plug		1
AYPC.C48.0907	Plug		2
AYPC.W62.0988	Door adjoining profile plug		1
2.9x9.5-A2 DIN7982	Self-tapping screw		4
3.9x13-A2 DIN7981	Self-tapping screw		(L9+L10)/250
3.9x16-A2 DIN7981	Self-tapping screw		4+(L6+L7)/250
3.9x38-A2 DIN7981	Self-tapping screw		(L6+L7)/250
3.9x16-A2 DIN7982	Self-tapping screw		4

50 mm infill unit	
A=L2-152; B=H-H1-153	1
A=L2-152; B1=H1-163	1
A1=L3-152; B=H-H1-153	1
A1=L3-152; B1=H1-163	1

Article	Name Image	45°	L	1...
Profile				
AYPC.W72.0105	Frame profile		L	1
			H	1
			H	1
AYPC.W72.0205	Leaf profile		L2=L1-41.5	2
			H2=H-57	3
AYPC.W72.0204	Leaf profile		* H2=H-57	1
AYPC.W72.0242	Leaf profile		* L3=L-L1-41.5	2
AYPC.W72.0302	Transom bar profile		L4=L2-134	1
			L5=L3-134	1
AYPC.W72.0839	Basement profile		L6=L4	1
			L7=L5	1
AYPC.W72.0838	Threshold profile		L8=L-138	1
AYPC.C48.0611	Drip bar		L9=L2-47	1
			L10=L3-25	1
AYPC.C48.0602	Glass bead profile		L11=L4	4
			L12=L5	4
			H3=H-H1-179	4
			H4=H1-189	4

Article	Name	Image	L	1...
Gaskets				
FRK98	Rubber gasket		(H+L2+L3)x2+Lx2+H2x4	1
AYPC.W62.0977	Rubber corner			2
** FRK193	Rubber gasket		(A+A1+B+B1)x4	1
** AYPC.W72.0911	Seam sealing		(A+A1+B+B1)x4-16x100***	1
** FRK197	Rubber gasket		(A+A1+B+B1)x4	1
** FRK179	Rubber corner			16
PE21x8	Thermal insulation insert		L6+L7	1

1. Select articles of glass bead profiles and gaskets depending on infill unit thickness (see part 01.04 – Table of glazing)
2. For profiles marked with * the subsequent machining is required (see the section 04.06 – Profiles machining and assemblage).

** Other accessories are possible (see the section 04.04 – Sections and junctions).

*** The quantity of removed AYPC.W72.0911 seam sealing depends on the type of opening and quantity of bearing supports

Dimensions

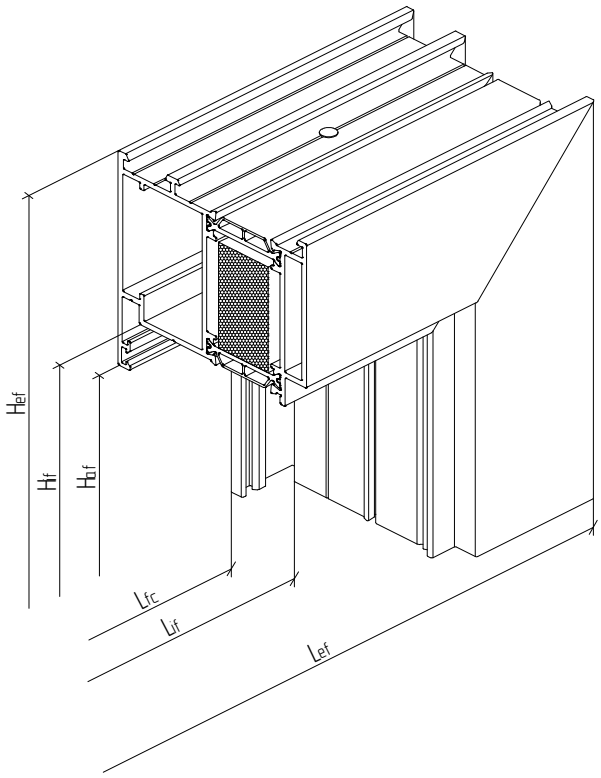

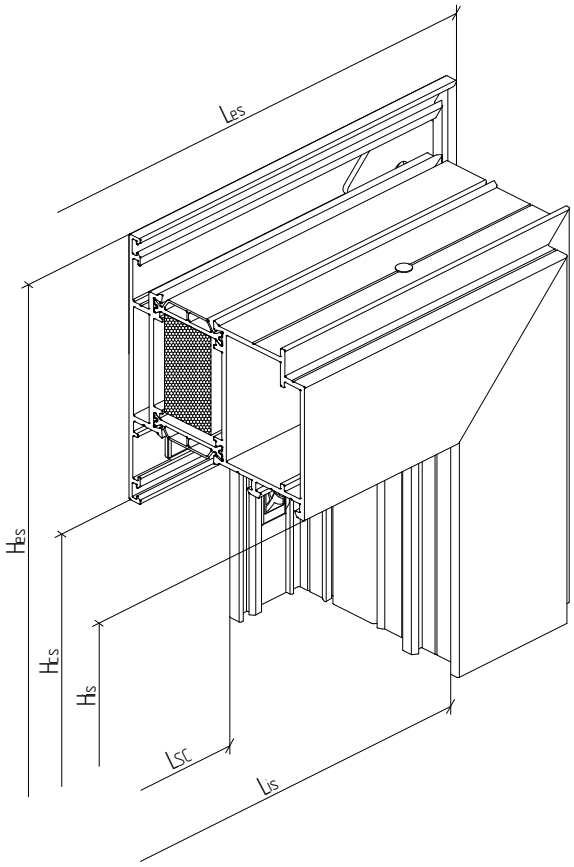

Lef – external frame width
Lif – internal frame width
Lfc – frame clearance width
Hef – external frame height
Hif – internal frame height
Hfc – frame clearance height

Les – external sash width
Lis – internal sash width
Lsc – sash clearance width
Hes – external sash height
His – internal sash height
Hcs– sash clearance height

Lg – glass width
Hg – glass height

Door configurations

Outward opening

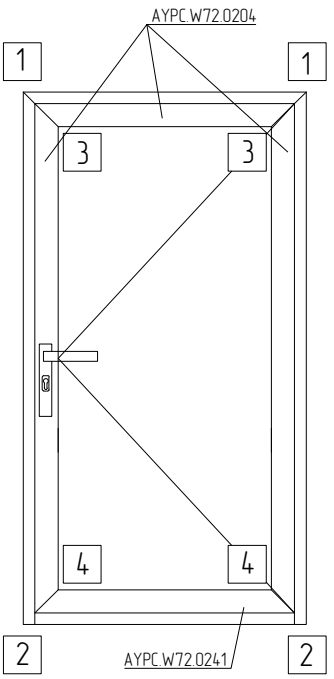

Inward opening

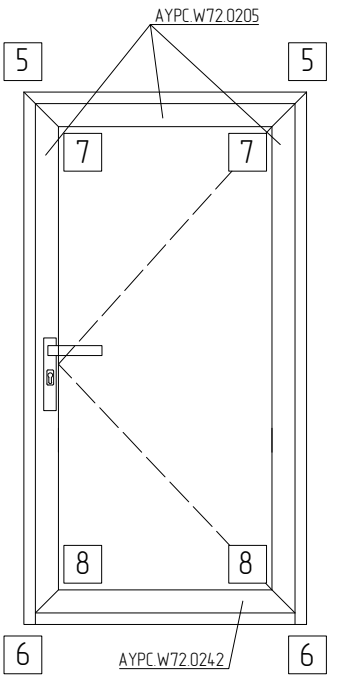

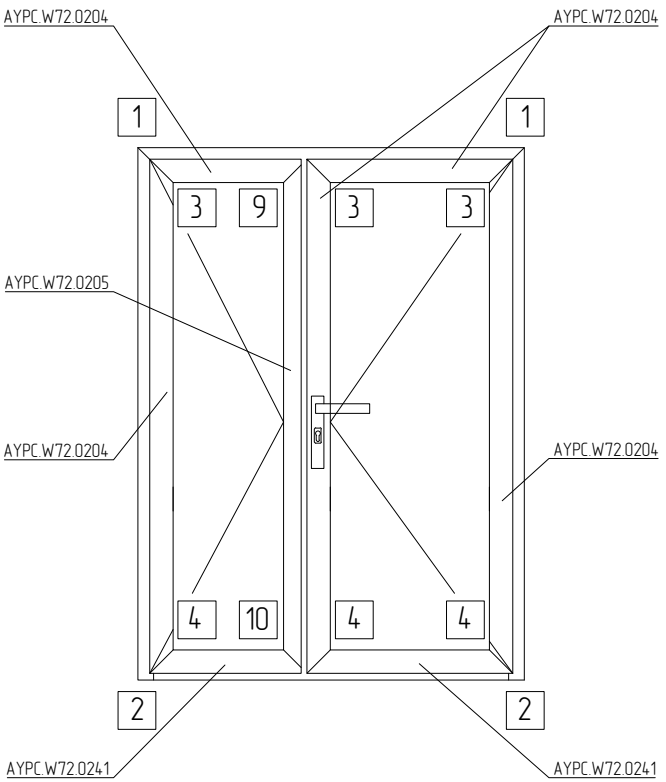

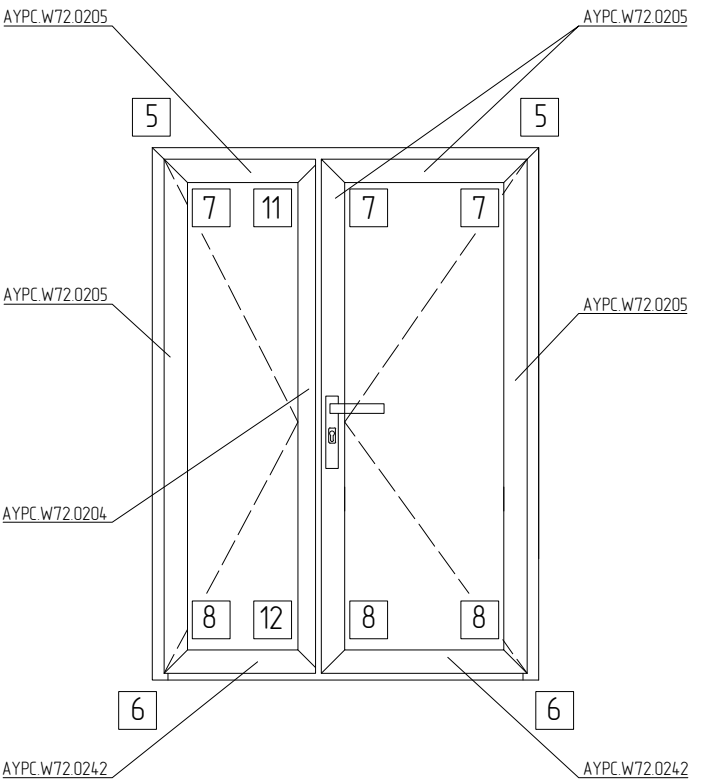

Door configurations

Outward opening

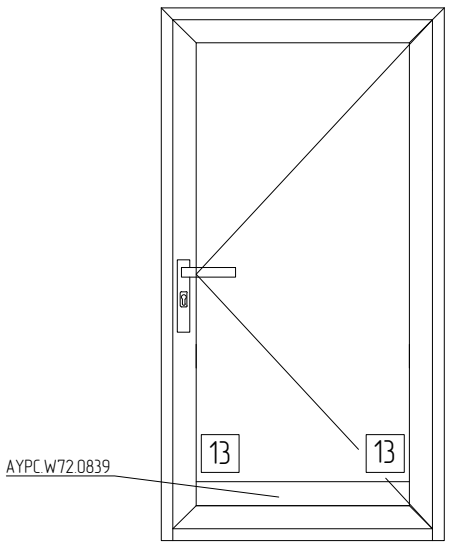

Inward opening

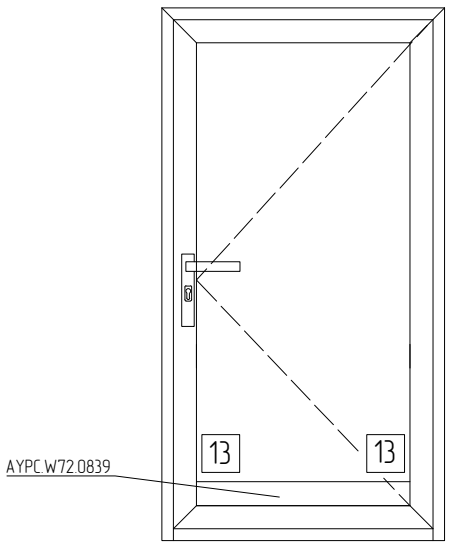

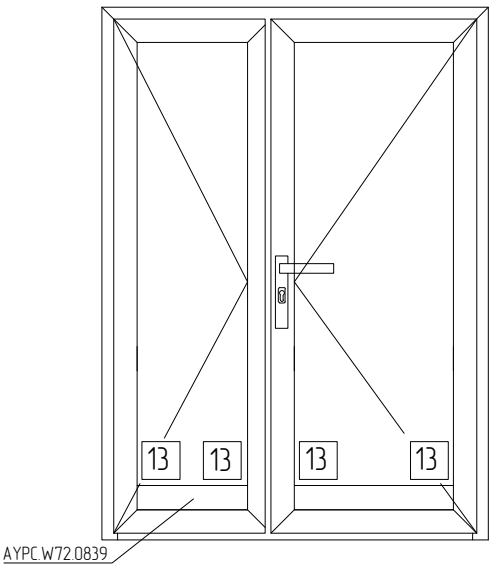

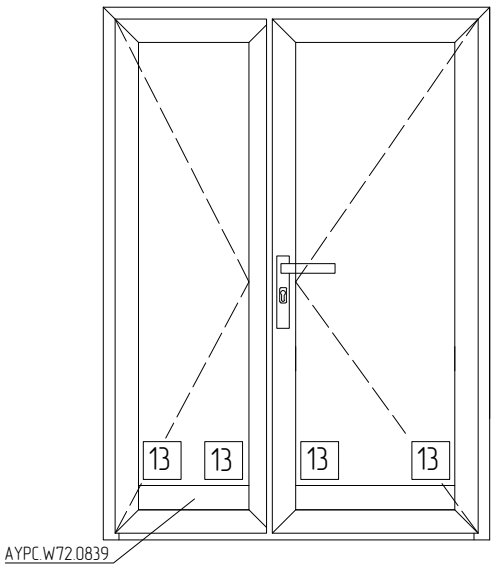

Plug installation

Outward opening

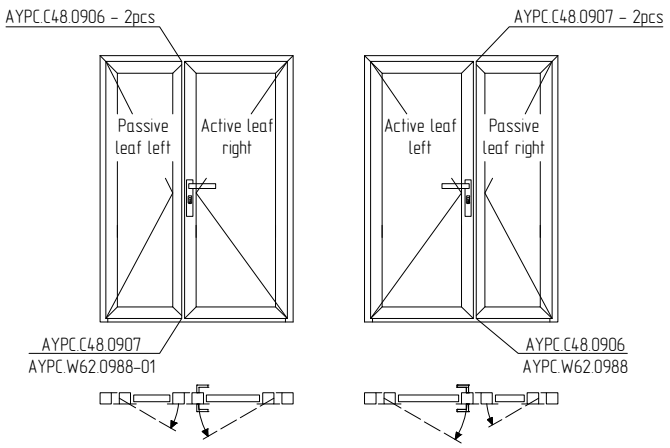

Inward opening

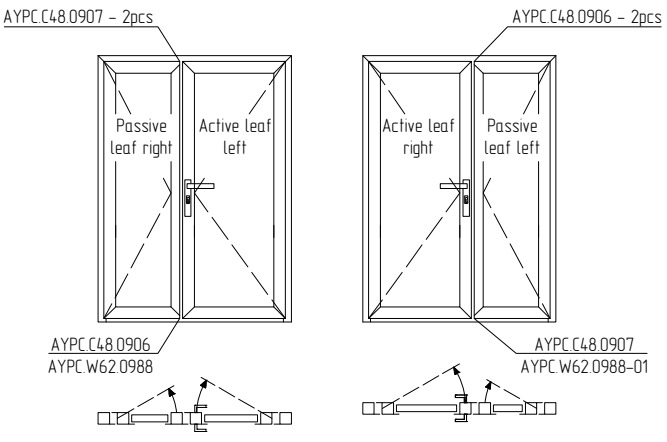

Anti bi-metal thermal break

The difference between AYPC.W72.0214, AYPC.W72.0215, AYPC.W72.0243, AYPC.W72.0244 anti bi-metal profiles and AYPC.W72.0204, AYPC.W72.0205, AYPC.W72.0241, AYPC.W72.0242 standard profiles is in the used thermal breaks

Thermal break in standard profiles

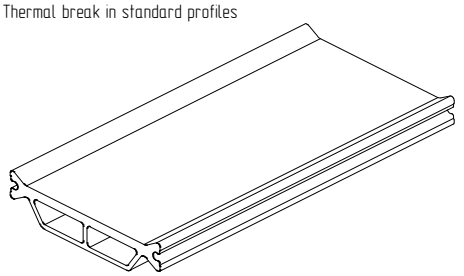

Thermal break in anti bi-metal profiles

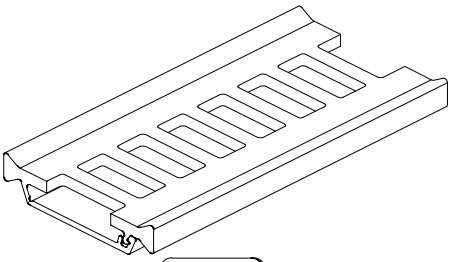

Anti bi-metal profiles should be treated in the same way as standard profiles

Profiles equivalence			
Standard profiles		Anti bi-metal profiles	
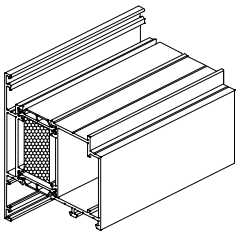	AYPC.W72.0204	AYPC.W72.0214	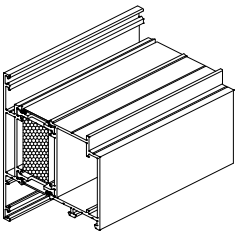
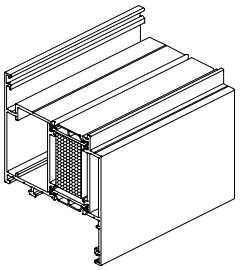	AYPC.W72.0205	AYPC.W72.0215	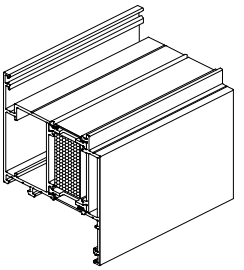
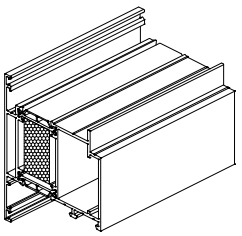	AYPC.W72.0241	AYPC.W72.0243	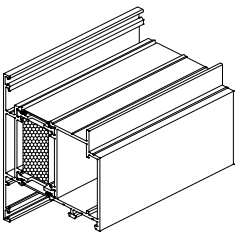
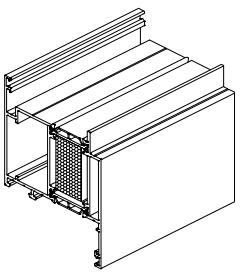	AYPC.W72.0242	AYPC.W72.0244	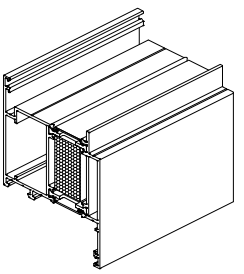

Standard profiles are used together! Their combination with anti bi-metal profiles is not allowed

✓

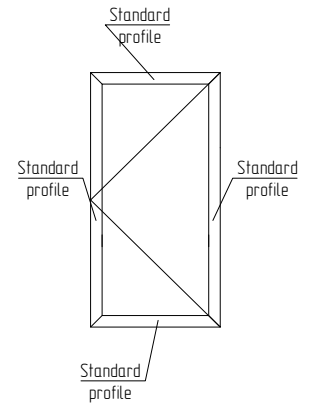

✓

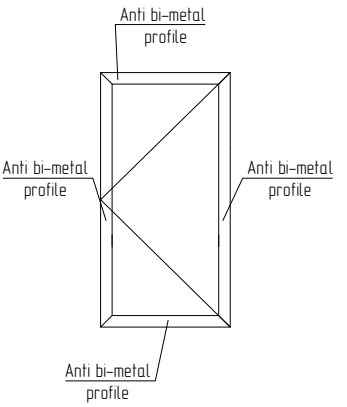

Any combinations are not allowed!

✗

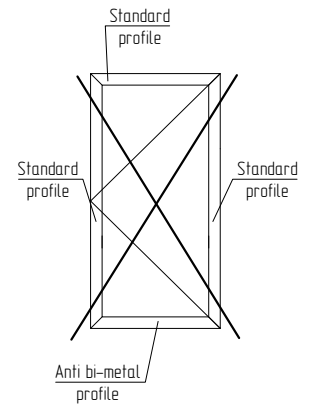

Corner connection of AYPC.W72.0104, AYPC.W72.0105 frame profiles

AYPC.W72.0104+AYPC.W72.0104

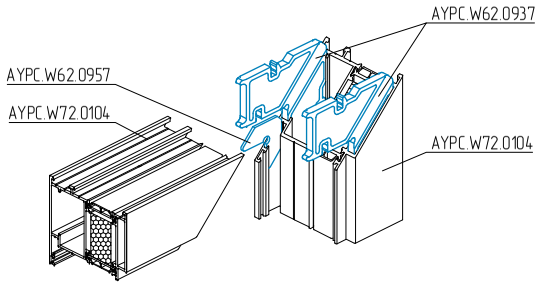

AYPC.W72.0105+AYPC.W72.0105

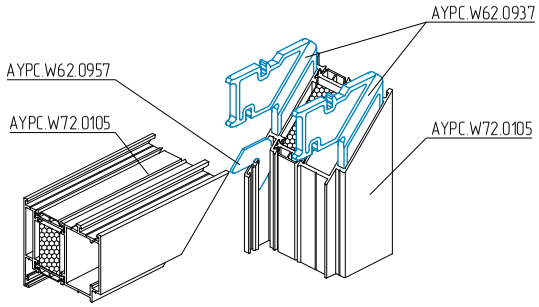

AYPC.W62.0937 casted clamping corner

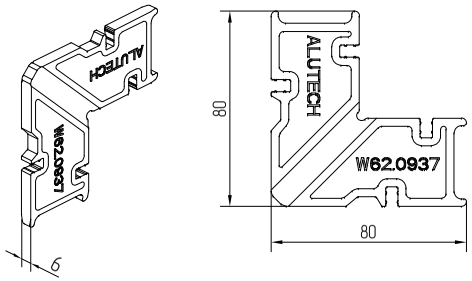

Profile machining for corner connection with pins

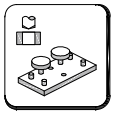

AYPC.W72.1983

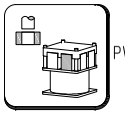

PW72.5

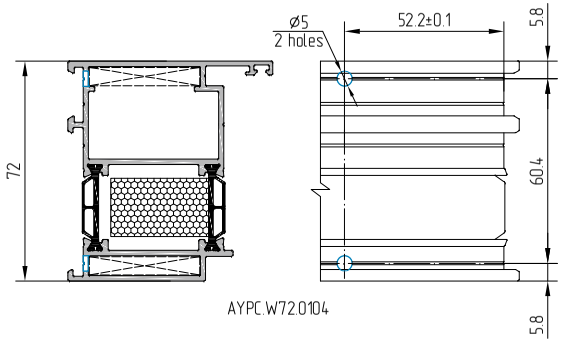

AYPC.W72.0104

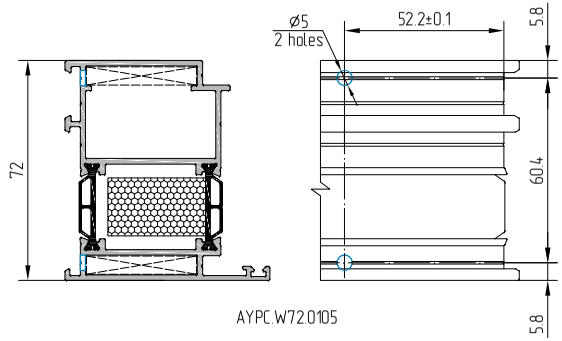

AYPC.W72.0105

Corner connection by crimping

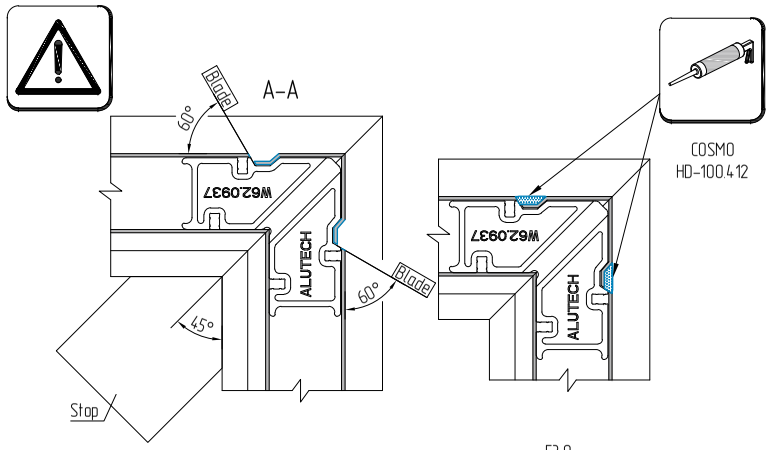

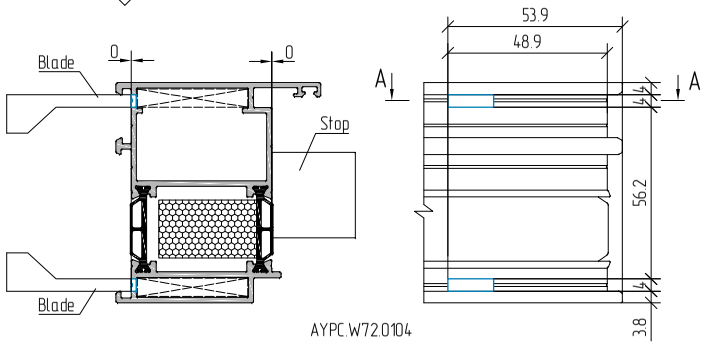

AYPC.W72.0104

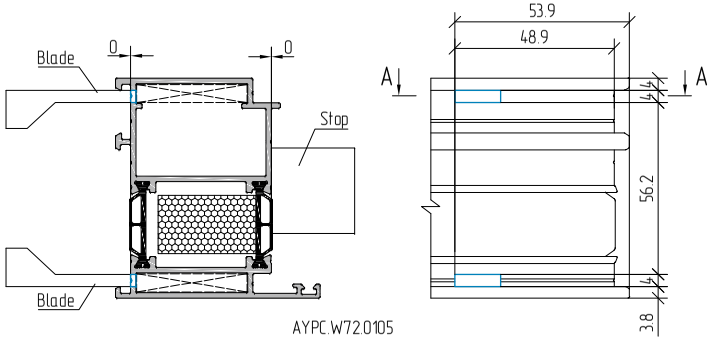

AYPC.W72.0105

Stop is shown schematically and depends on used tools

Corner connection of AYPC.W72.0204, AYPC.W72.0205 leaf profiles

AYPC.W72.0204+AYPC.W72.0204

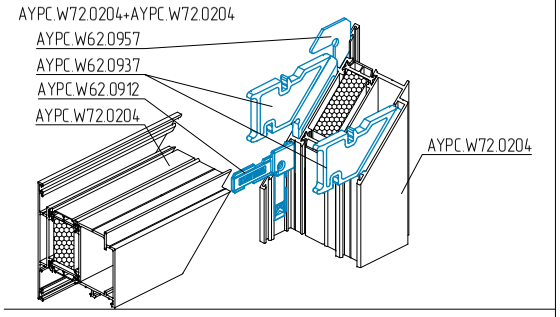

AYPC.W72.0205+AYPC.W72.0205

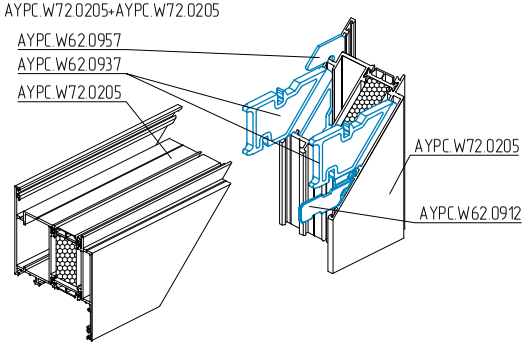

AYPC.W72.0204+AYPC.W72.0205

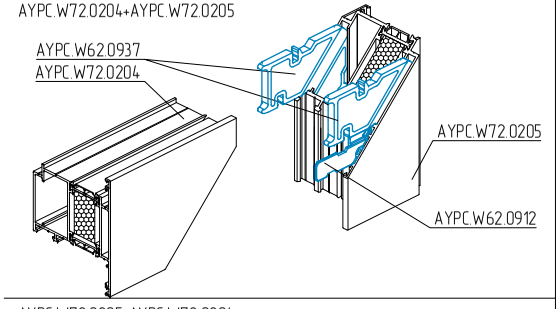

AYPC.W72.0205+AYPC.W72.0204

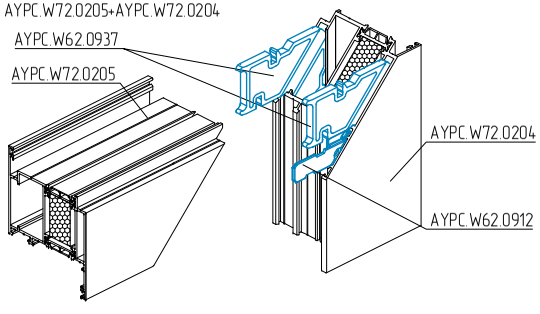

Profile machining for corner connection by using pins

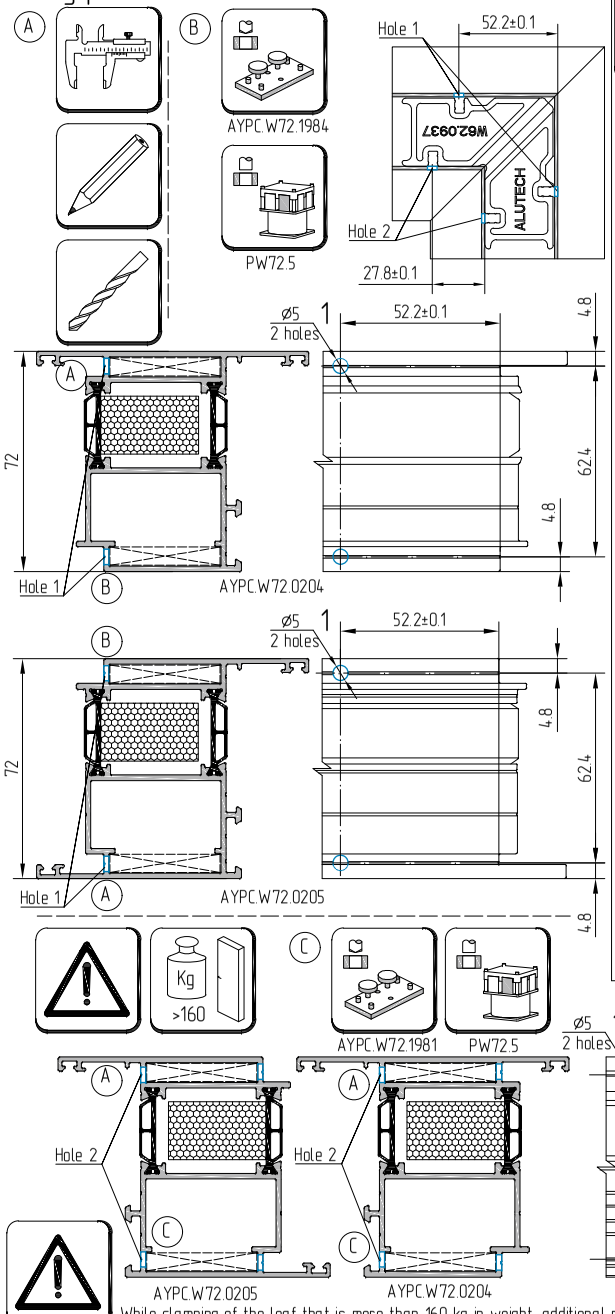

While clamping of the leaf that is more than 160 kg in weight, additional pins from the glazing side are required

Corner connection by crimping

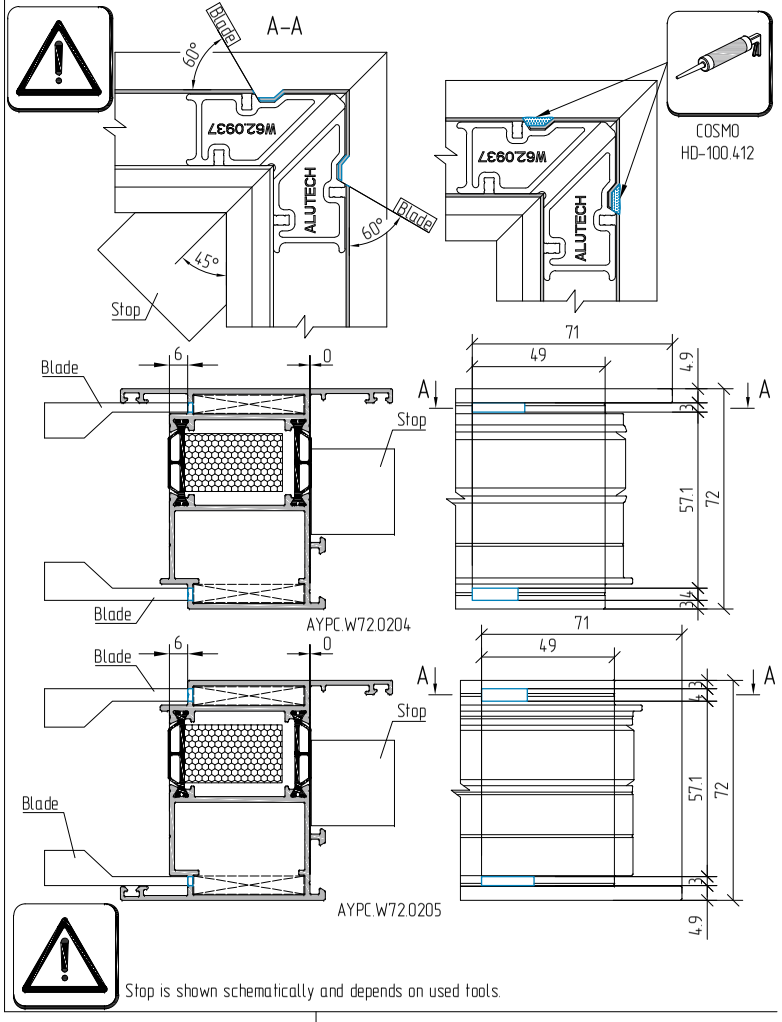

Stop is shown schematically and depends on used tools.

AYPC.W62.0937 casted clamping corner

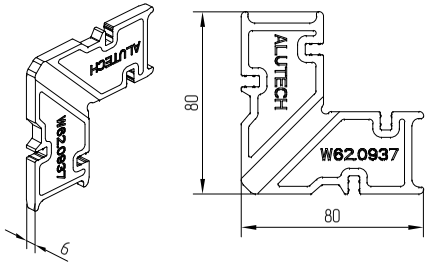

Corner connection of AYPC.W72.0204, AYPC.W72.0205 leaf profiles, AYPC.W72.0241, AYPC.W72.0242

AYPC.W72.0241+AYPC.W72.0204

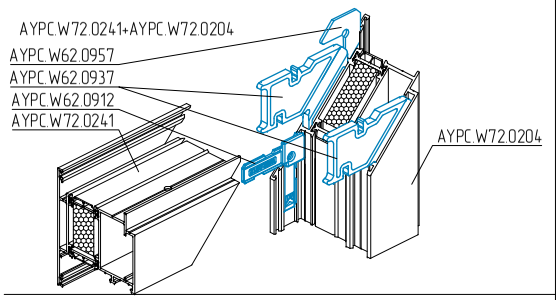

AYPC.W72.0241+AYPC.W72.0205

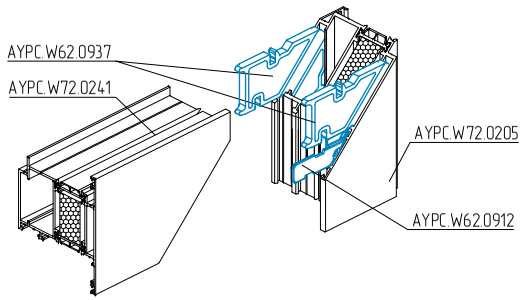

AYPC.W72.0242+AYPC.W72.0204

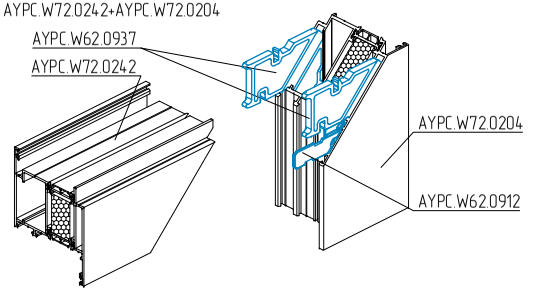

AYPC.W72.0242+AYPC.W72.0205

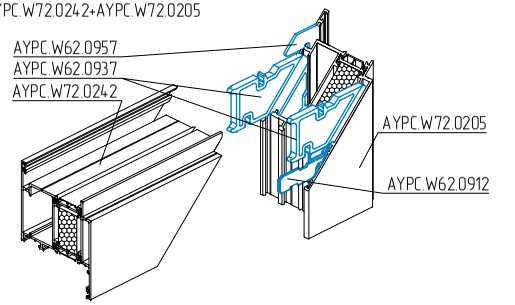

Profile machining for corner connection by using pins

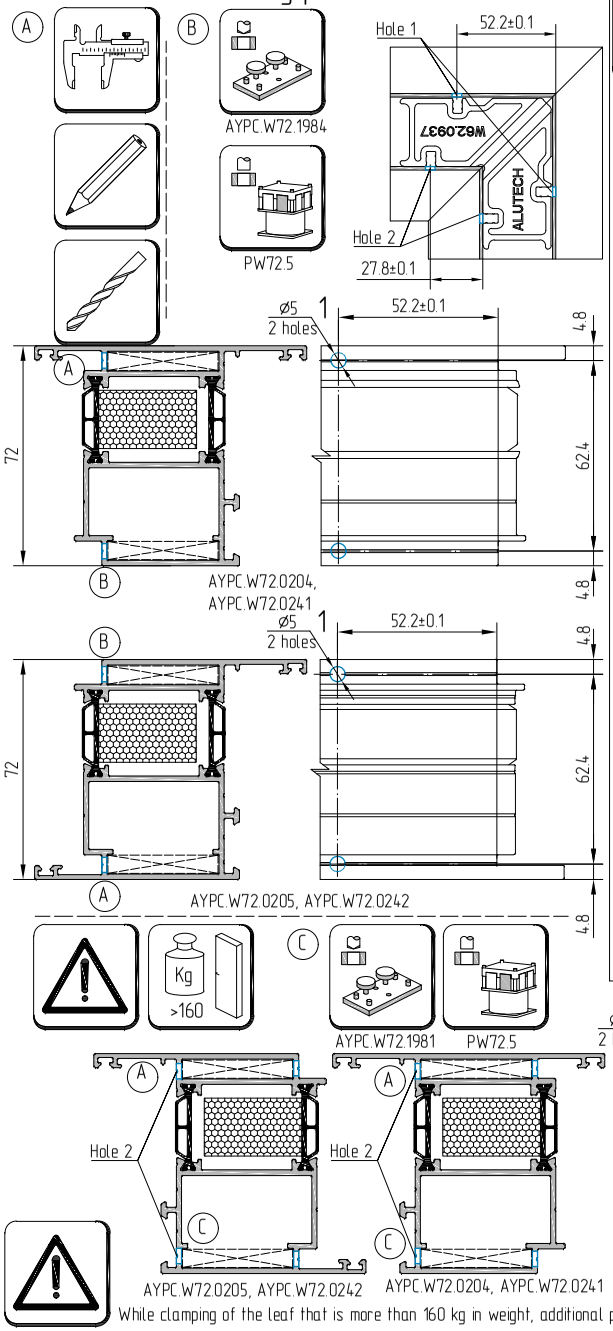

While clamping of the leaf that is more than 160 kg in weight, additional pins from the glazing side are required

Data for corner connection by crimping method

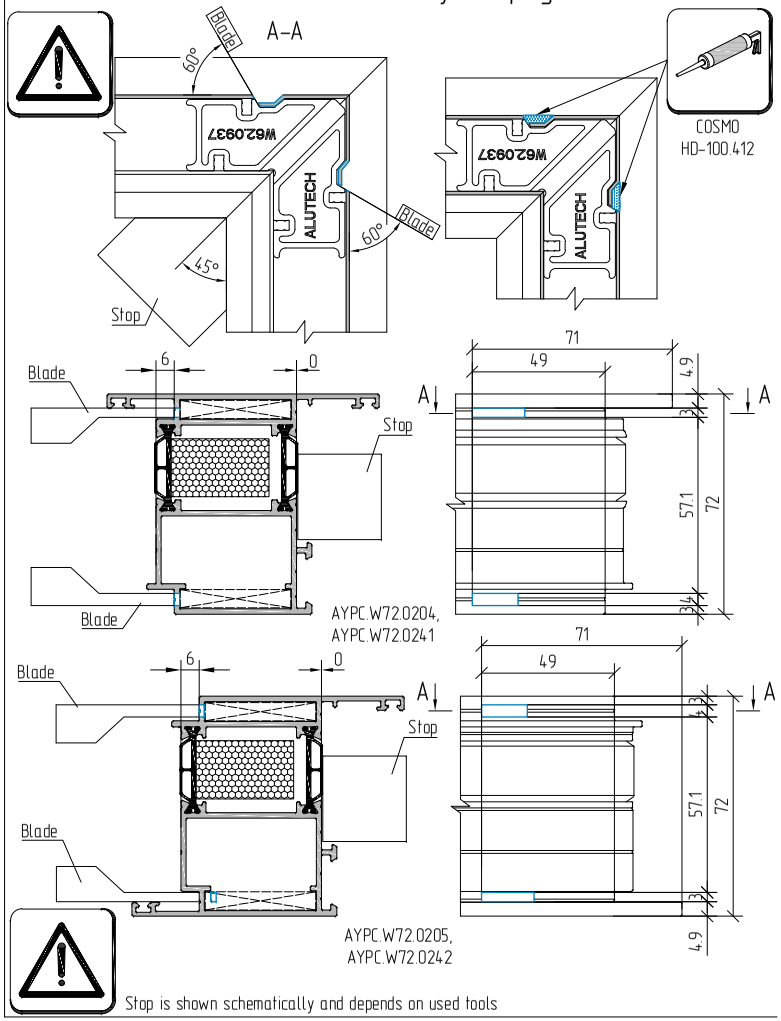

Stop is shown schematically and depends on used tools

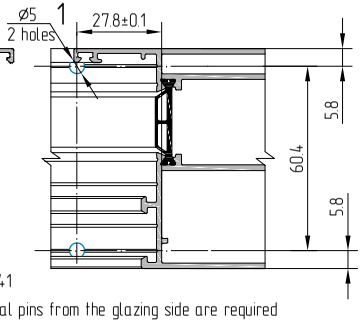

AYPC.W62.0937 casted clamping corner

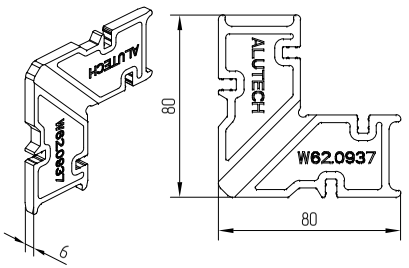

Sequence of assembly of the frame corner connection No 1

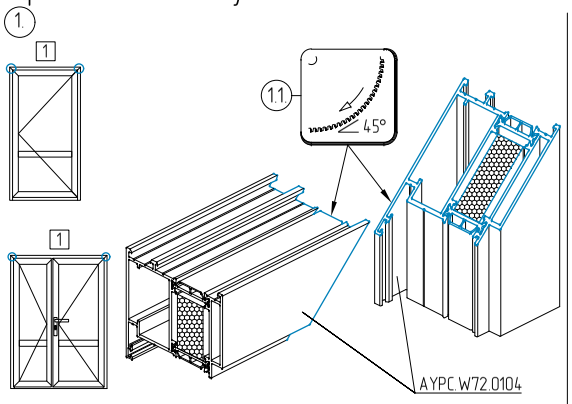

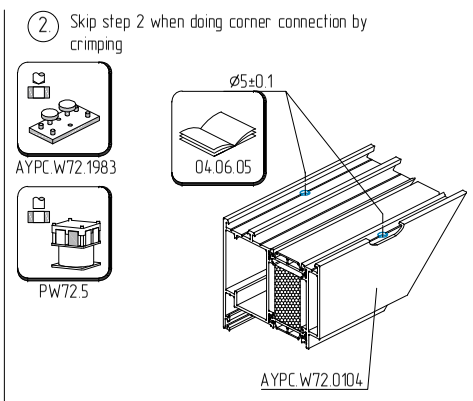

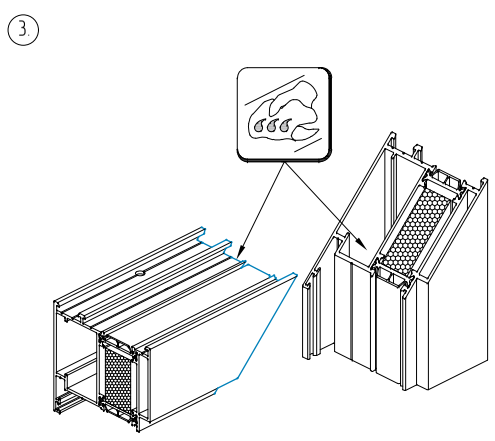

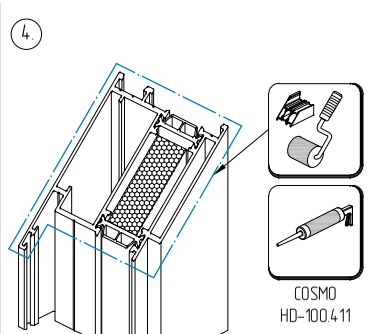

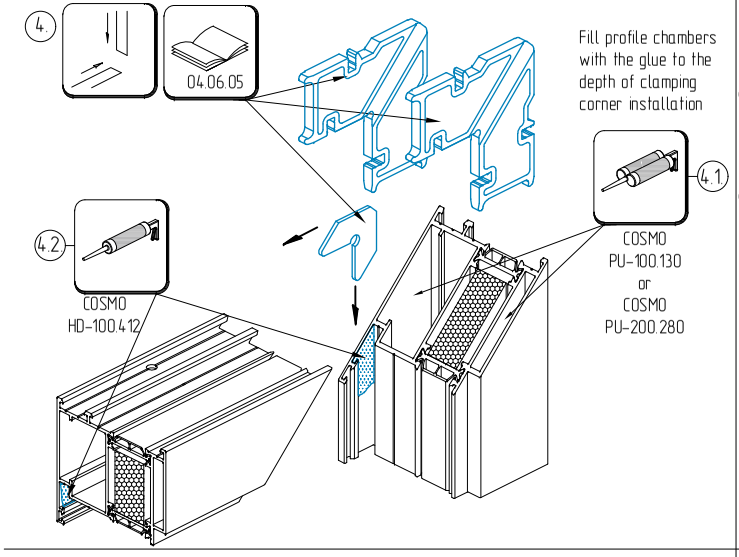

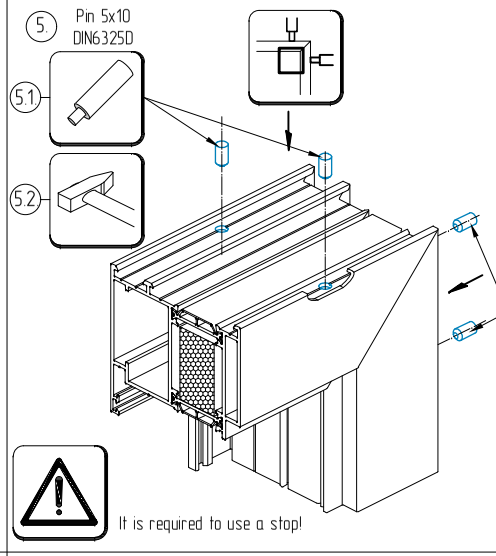

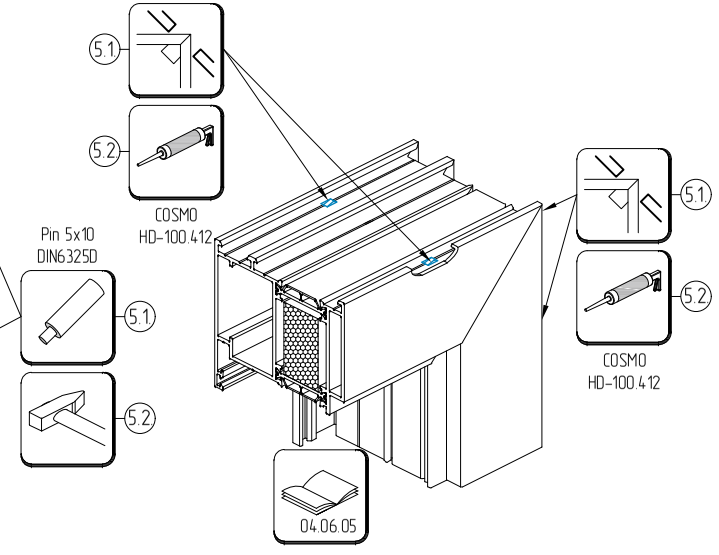

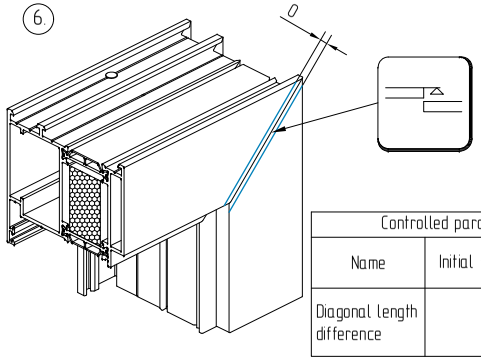

Controlled parameters of assembled item		
Name	Initial size intervals, mm	Limit deviation, mm
Diagonal length difference	≤ 1000 1000-2000 >2000	1.0 2.0 3.0

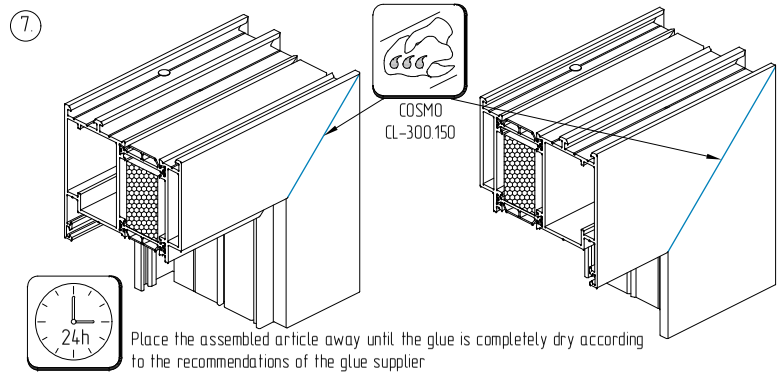

Sequence of assembly of the frame and threshold corner connection No 2 and 6

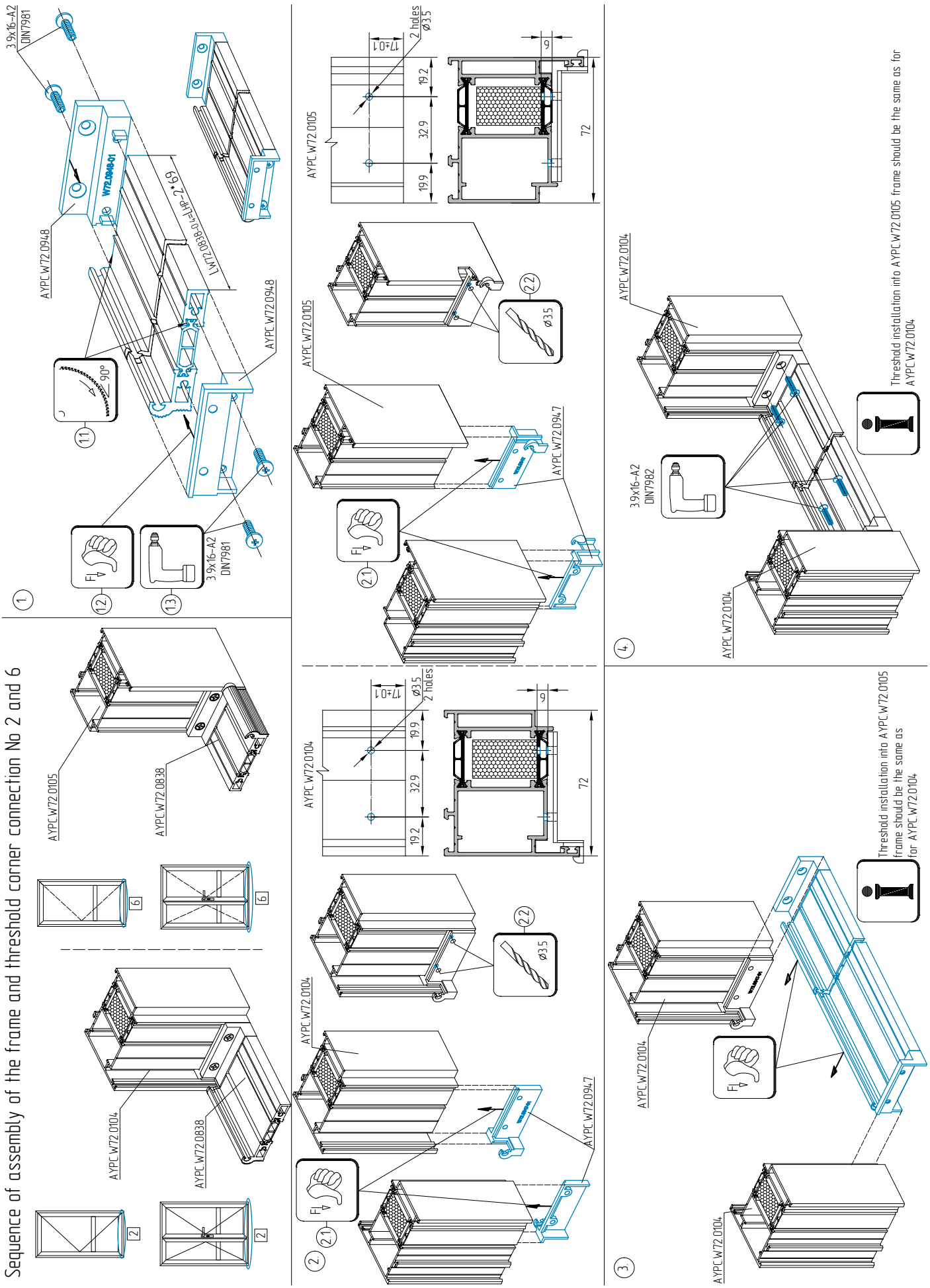

Sequence of assembly of the leaf corner connection No 3

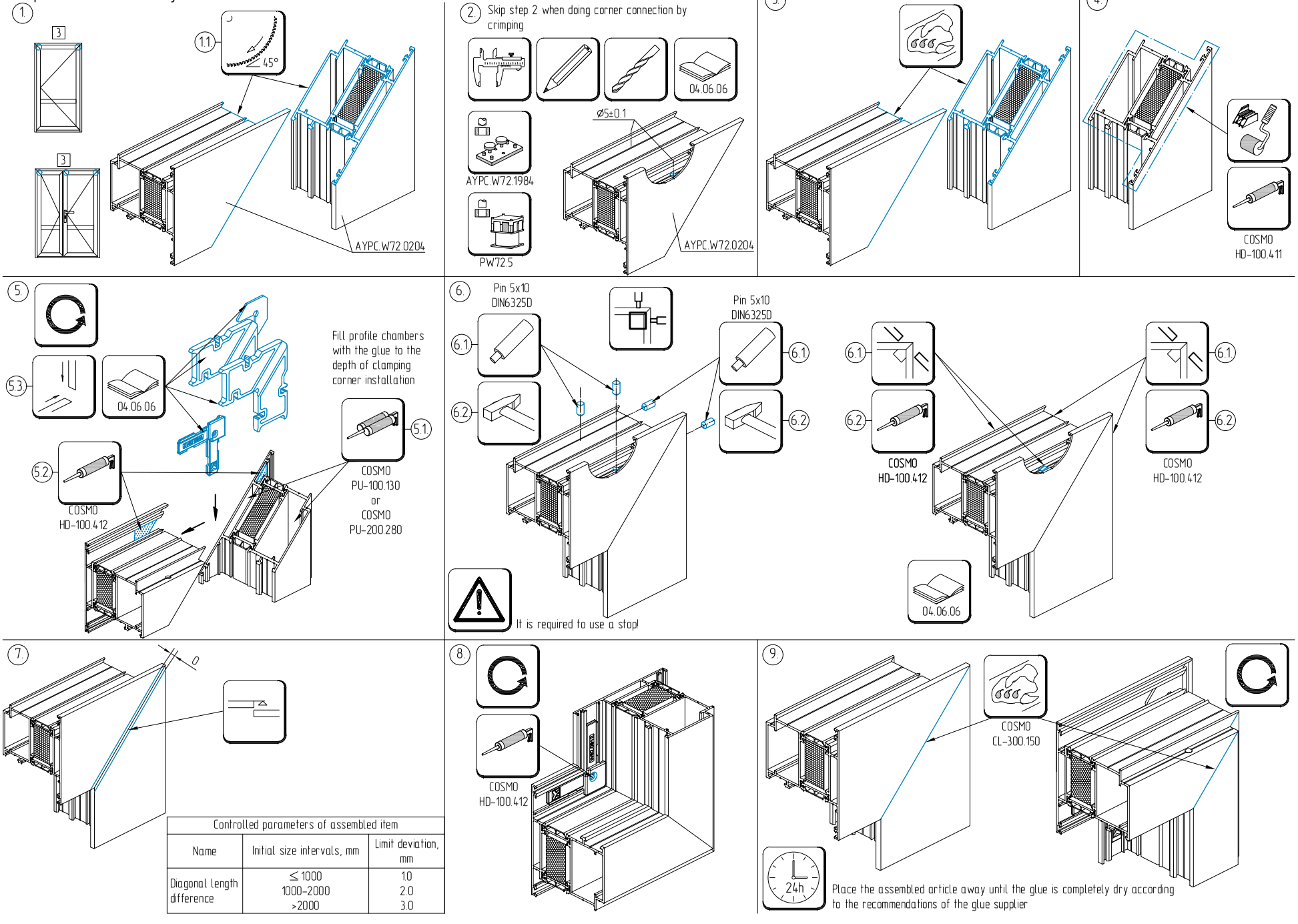

Sequence of assembly of the leaf corner connection No 4

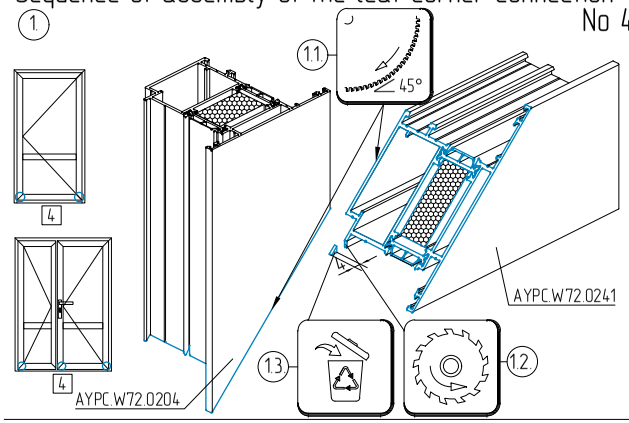

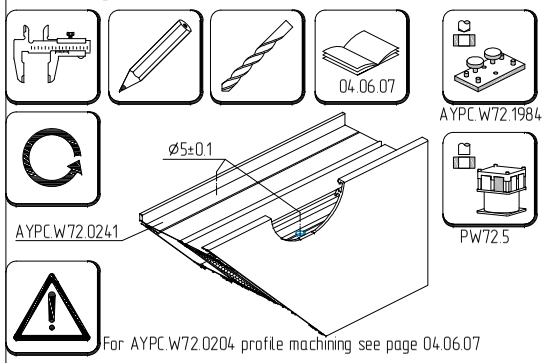

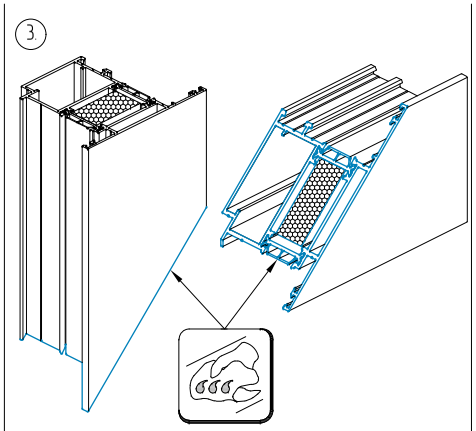

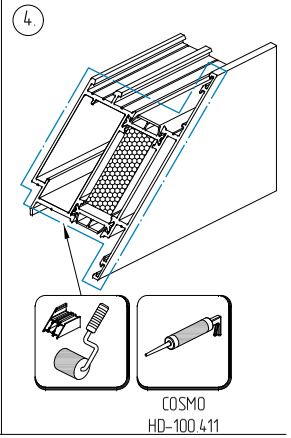

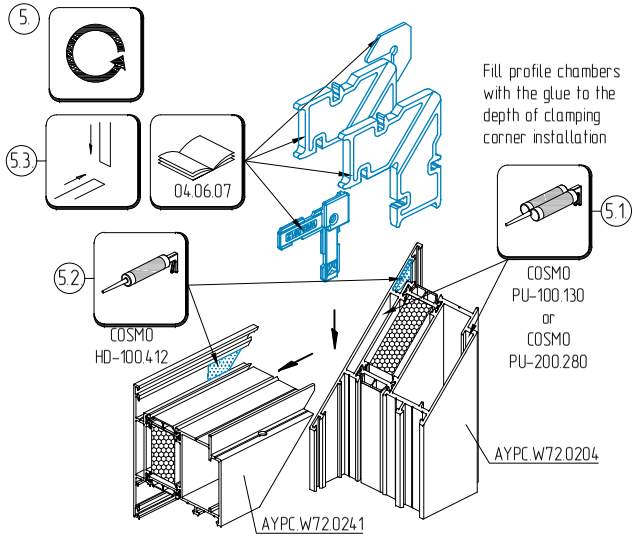

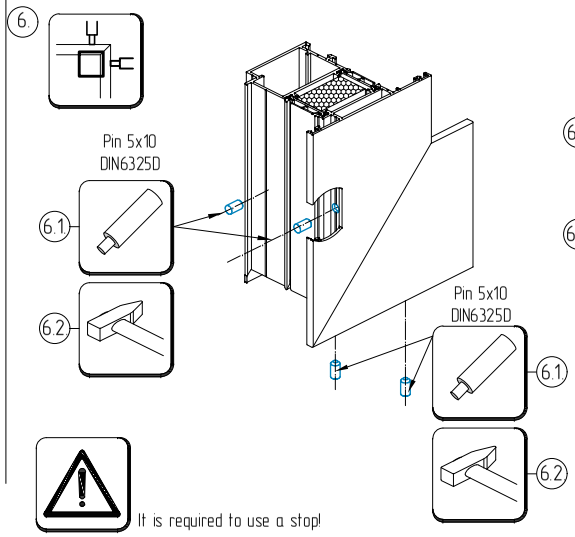

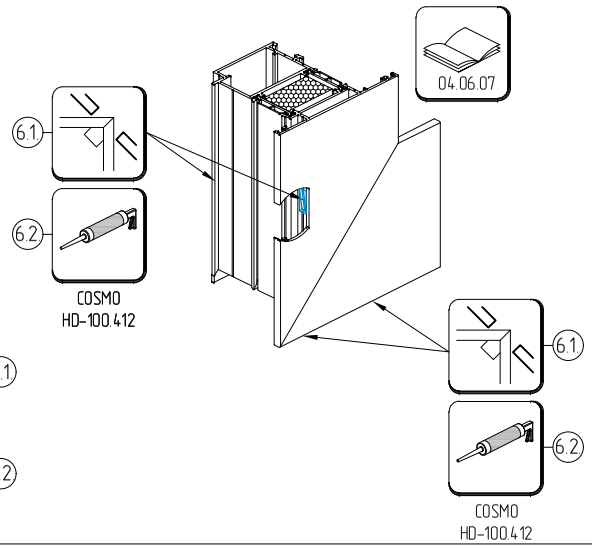

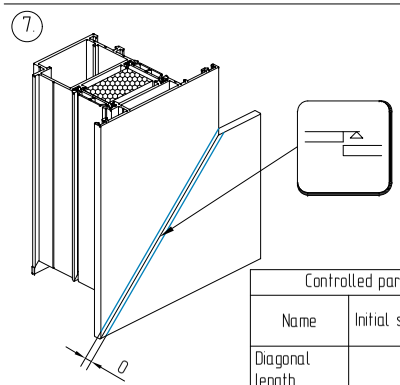

Controlled parameters of assembled item		
Name	Initial size intervals, mm	Limit deviation, mm
Diagonal length difference	≤ 1000 1000–2000 >2000	1.0 2.0 3.0

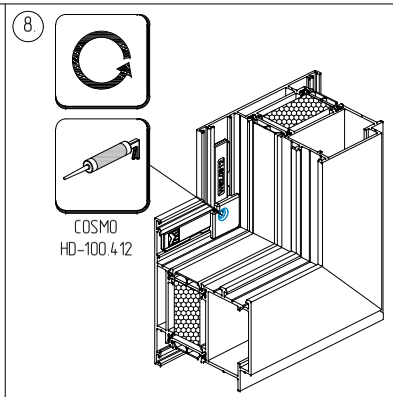

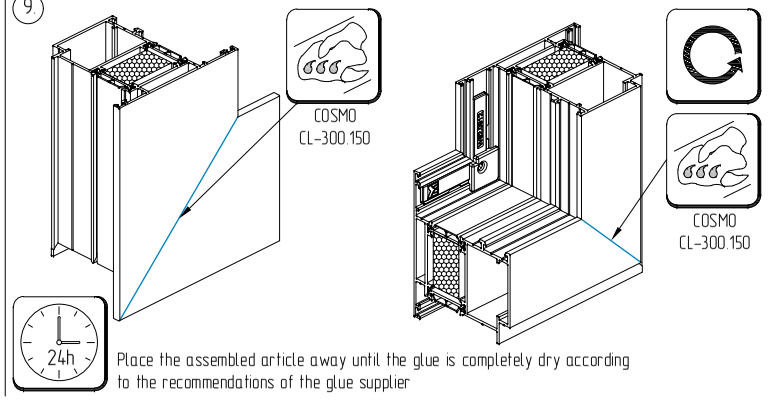

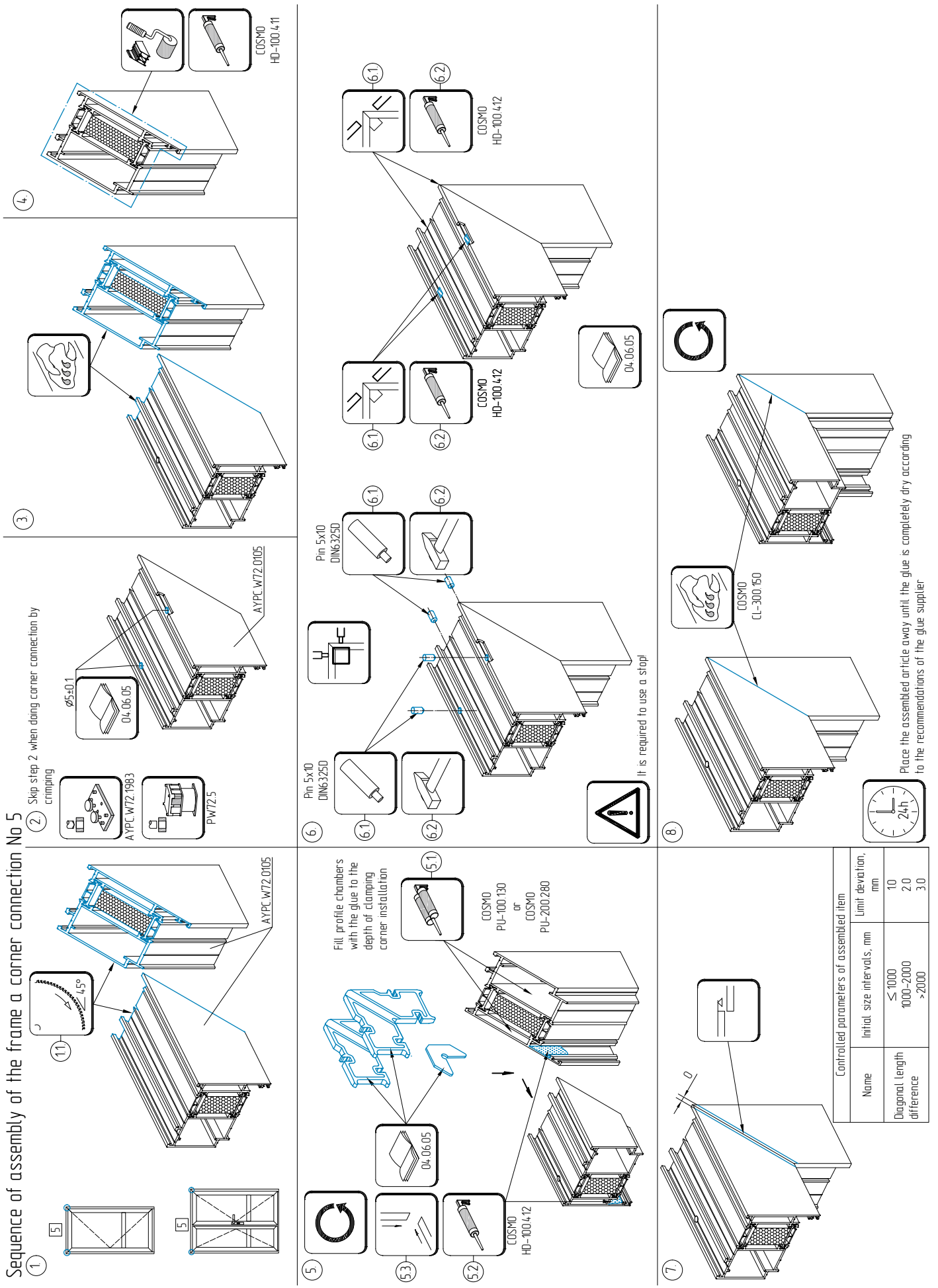
Sequence of assembly of the frame a corner connection No 5
1
5
5
11
45°
AYPC.W72.0105
AYPC.W72.0105
2
Skip step 2 when doing corner connection by crimping
AYPC.W72.1983
PW72.5
Ø5±0.1
04.06.05
AYPC.W72.0105
3
4
COSMO
HD-100.411
5
Fill profile chambers with the glue to the depth of clamping corner installation
04.06.05
5.1
COSMO
PU-100.130
or
COSMO
PU-200.280
5.3
5.2
COSMO
HD-100.412
6
Pin 5x10
DIN6325D
Pin 5x10
DIN6325D
6.1
6.2
6.1
6.2
COSMO
HD-100.412
6.1
6.2
COSMO
HD-100.412
04.06.05
It is required to use a stop!
7
8
COSMO
CL-300.150
24h
Place the assembled article away until the glue is completely dry according to the recommendations of the glue supplier
Controlled parameters of assembled item
Name
Initial size intervals, mm
Limit deviation, mm
Diagonal length difference
≤ 1000
1000-2000
>2000
10
2.0
3.0

Sequence of assembly of the leaf corner connection No 7

1.

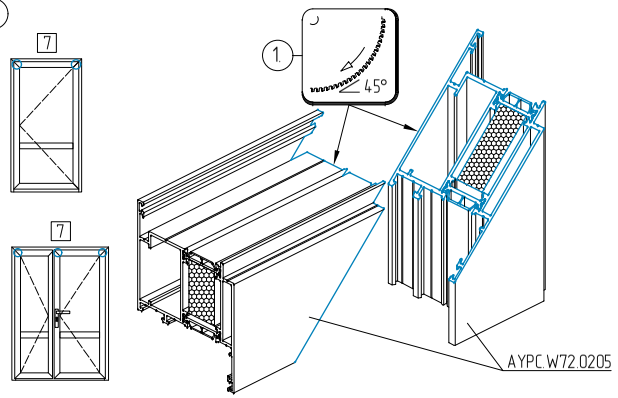

2. Skip step 2 when doing corner connection by crimping

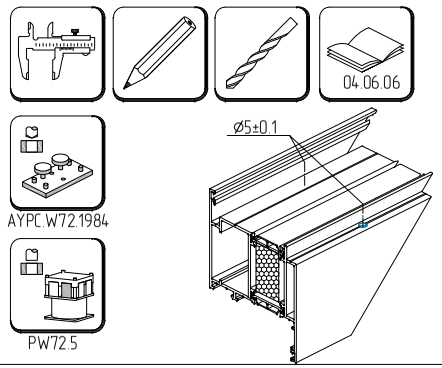

3.

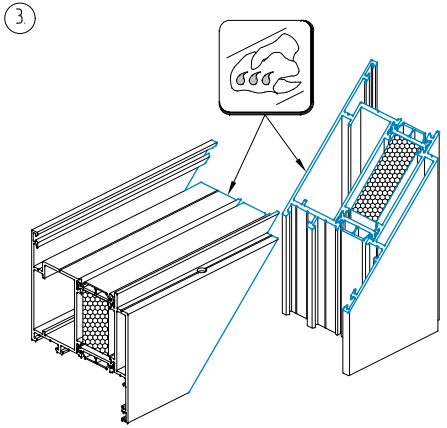

4.

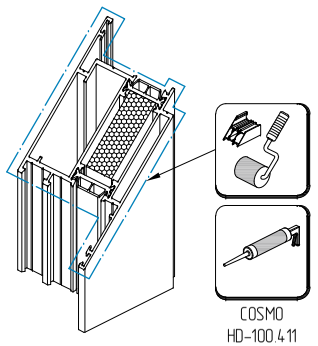

5.

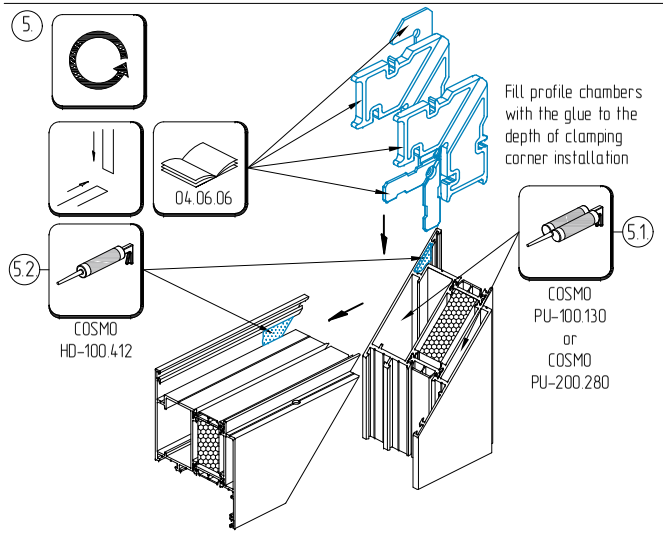

6.

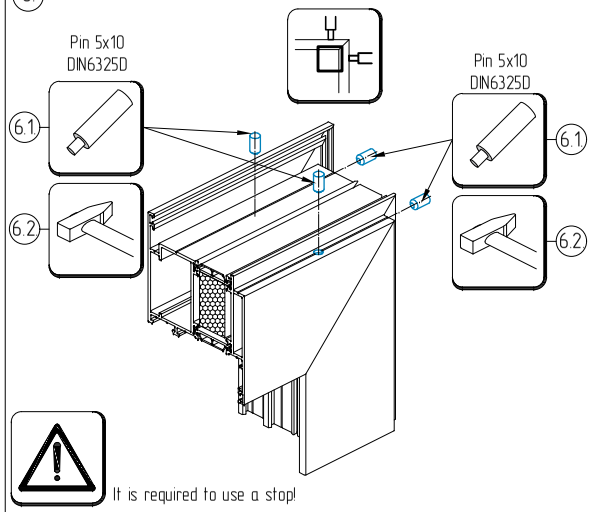

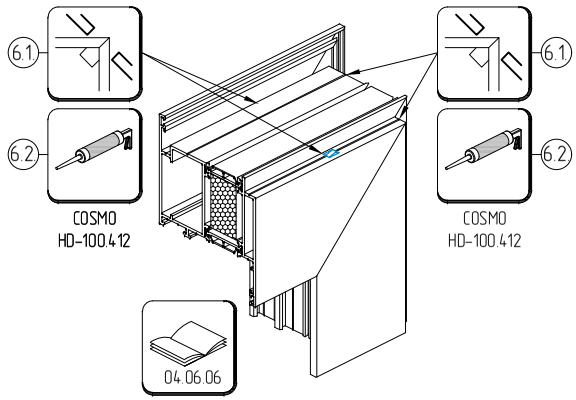

7.

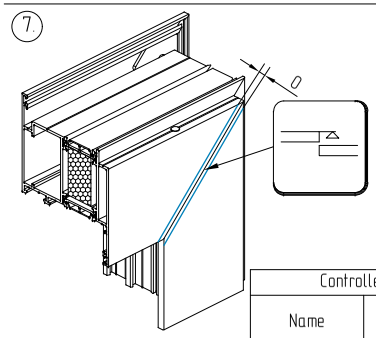

Controlled parameters of assembled item		
Name	Initial size intervals, mm	Limit deviation, mm
Diagonal length difference	≤ 1000 1000–2000 >2000	1.0 2.0 3.0

8.

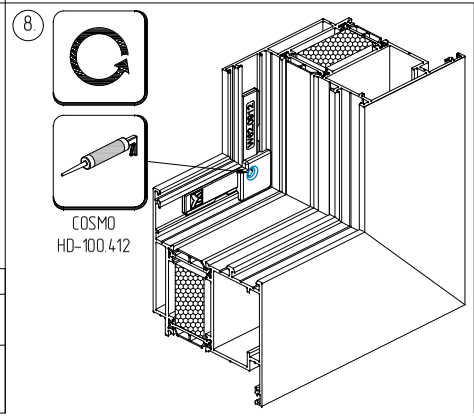

9.

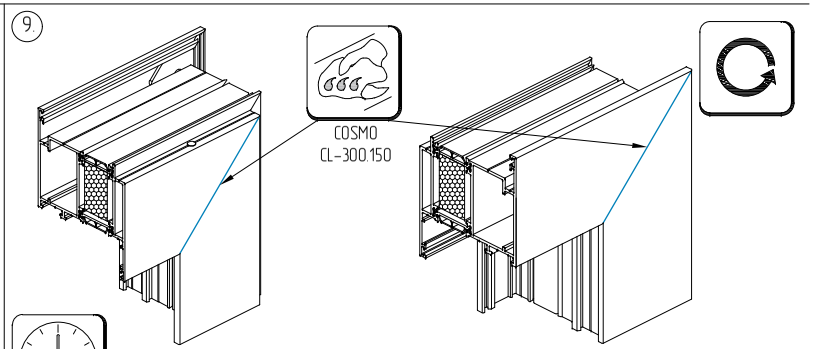

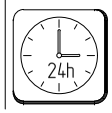

Place the assembled article away until the glue is completely dry according to the recommendations of the glue supplier

Sequence of assembly of the leaf corner connection No 8

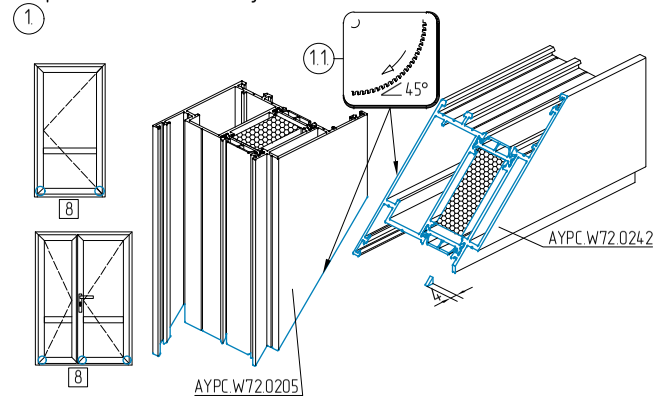

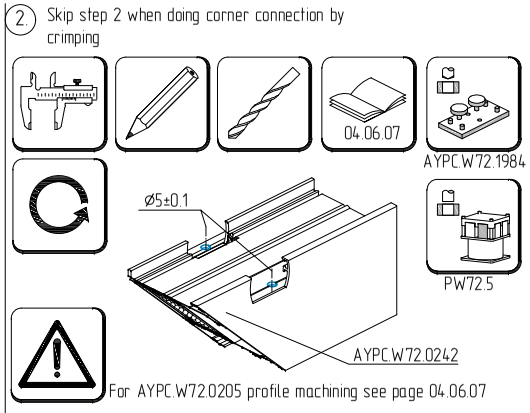

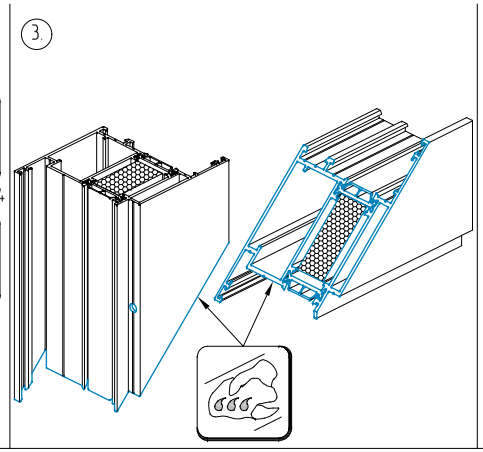

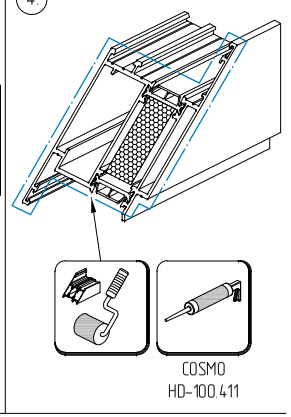

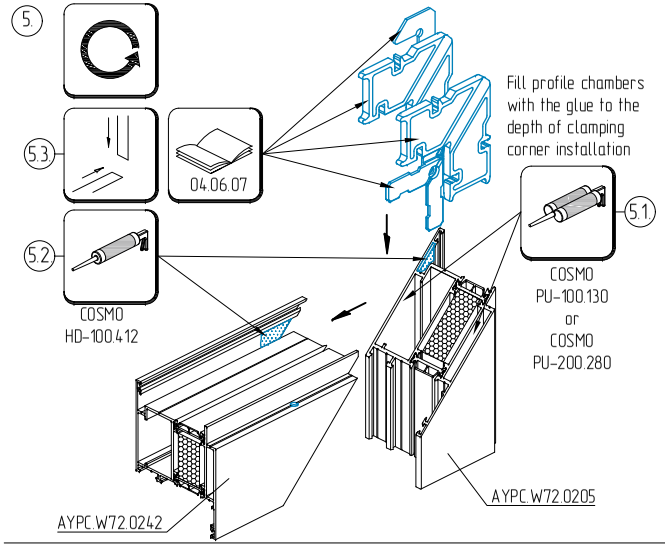

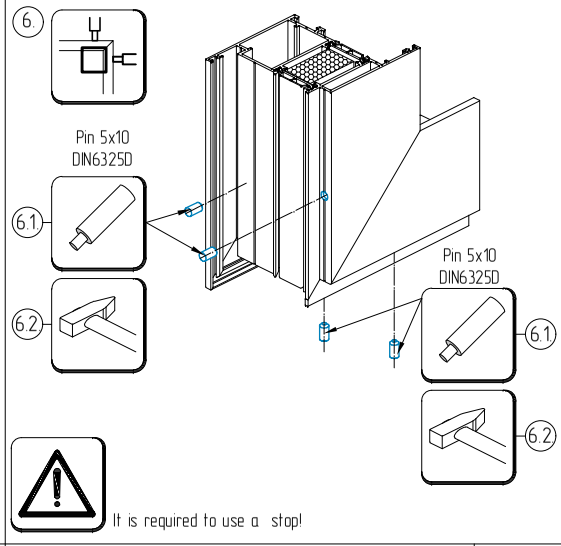

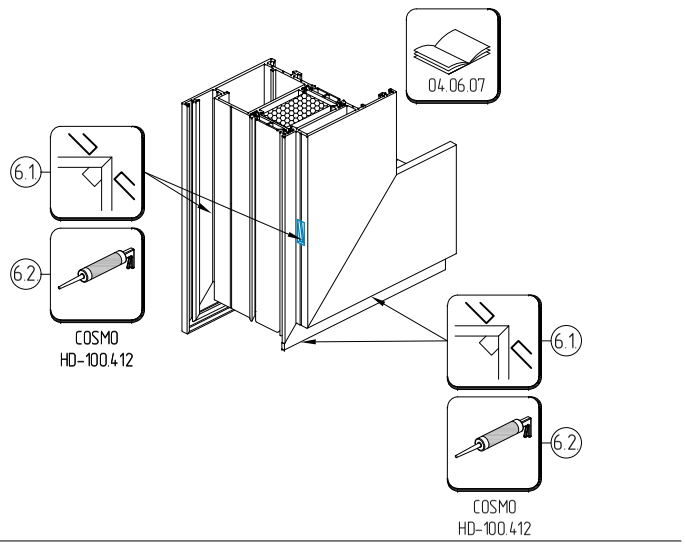

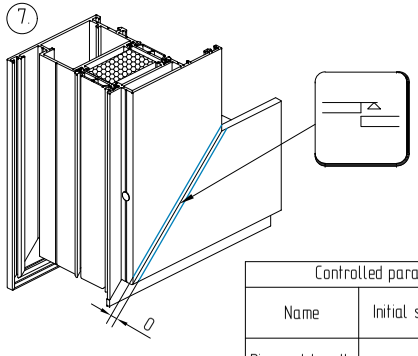

Controlled parameters of assembled item		
Name	Initial size intervals, mm	Limit deviation, mm
Diagonal length difference	≤ 1000 1000–2000 >2000	1.0 2.0 3.0

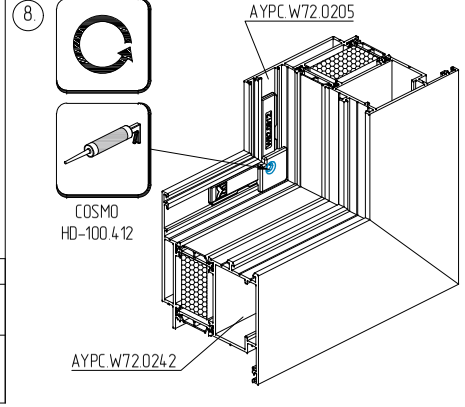

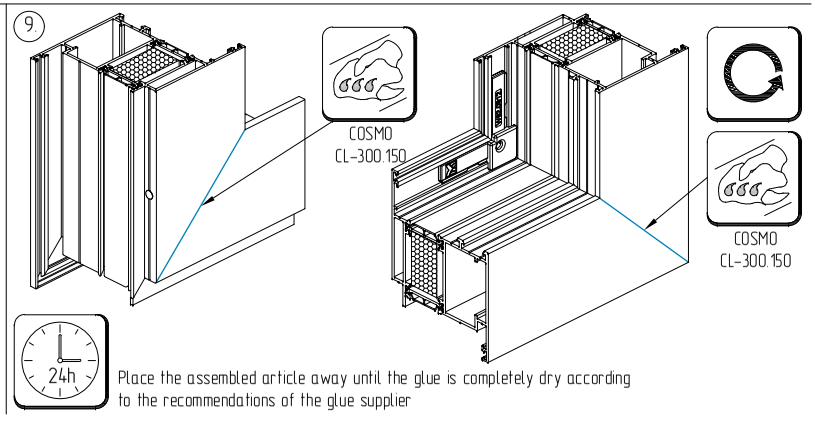

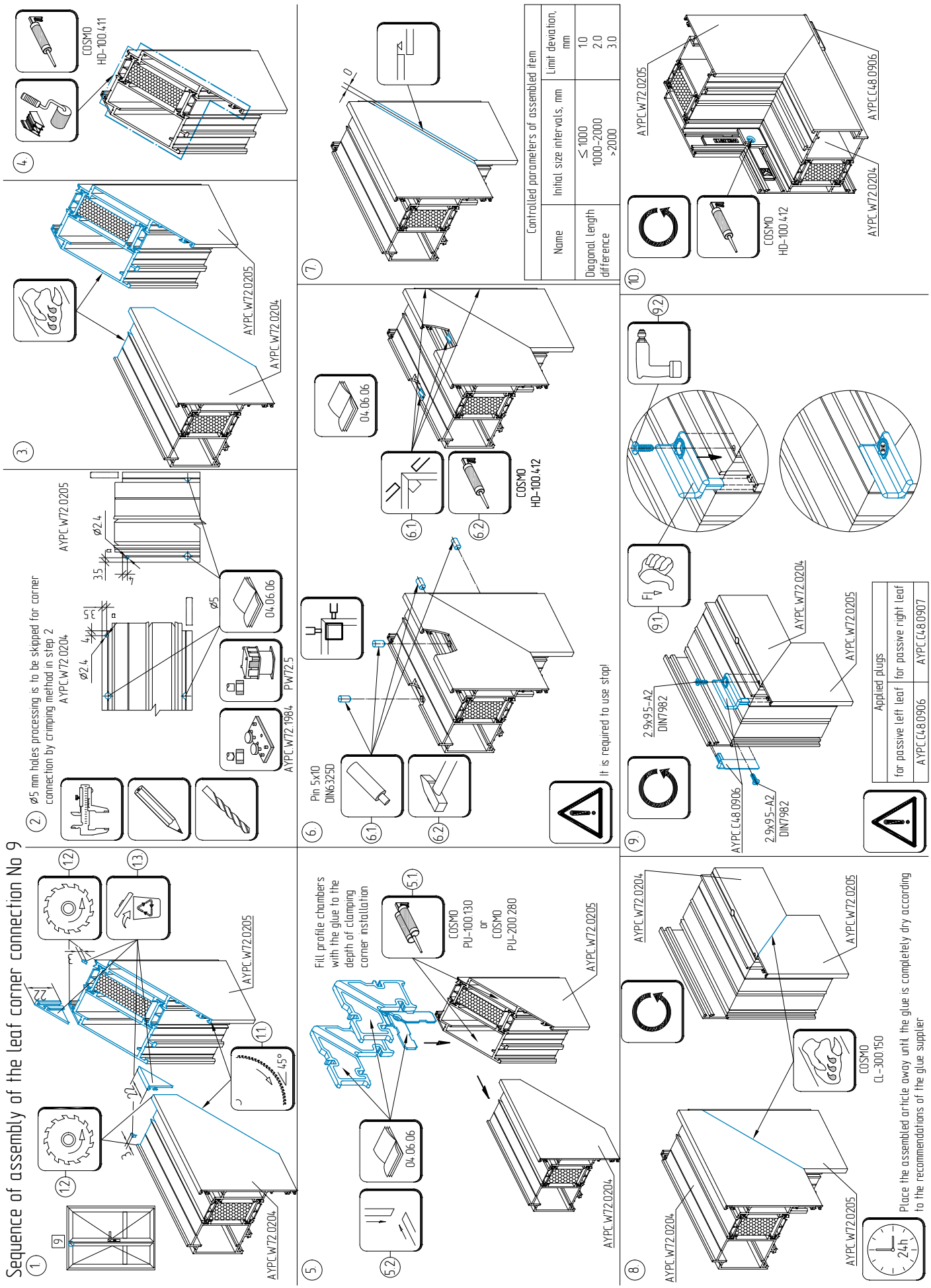
Sequence of assembly of the leaf corner connection No 9
AYPC W72 0204
AYPC W72 0205
Ø5 mm holes processing is to be skipped for corner connection by crimping method in step 2
AYPC W72 0204
Ø2.4
Ø5
04 06 06
PW72 5
AYPC W72 1984
COSMO HD-100 411
AYPC W72 0205
AYPC W72 0204
Fill profile chambers with the glue to the depth of clamping corner installation
COSMO PU-100 130 or COSMO PU-200 280
Pin 5x10 DIN6325D
COSMO HD-100 412
It is required to use stop!
Controlled parameters of assembled item
Name
Diagonal length difference
Initial size intervals, mm
≤ 1000
1000–2000
>2000
Limit deviation, mm
1.0
2.0
3.0
2.9x9.5–A2 DIN7982
AYPC C48 0906
Applied plugs
for passive left leaf
AYPC C48 0906
for passive right leaf
AYPC C48 0907
COSMO CL-300 150
Place the assembled article away until the glue is completely dry according to the recommendations of the glue supplier
24h

Sequence of assembly of the leaf corner connection No 10

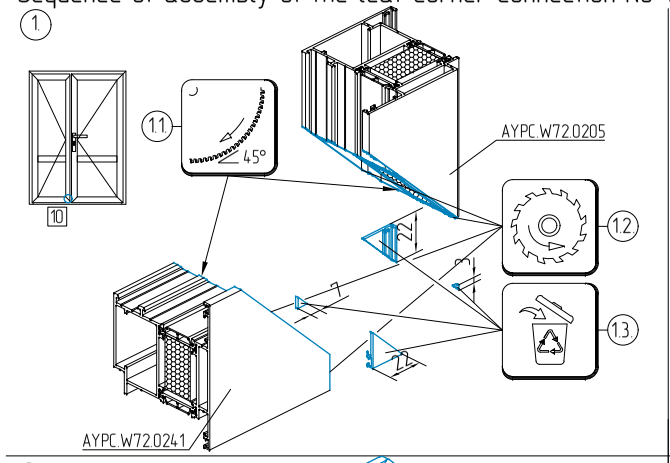

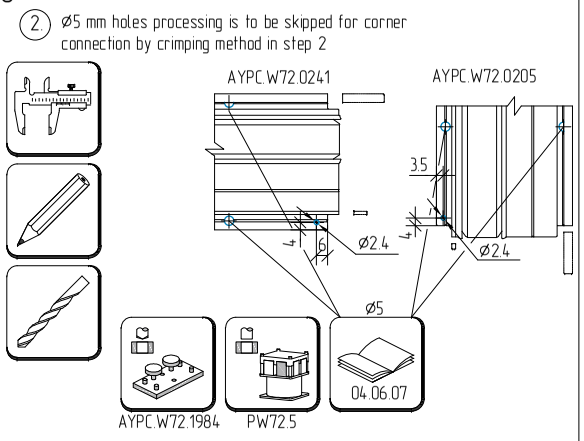

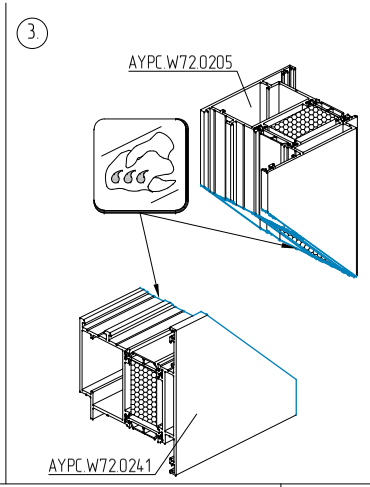

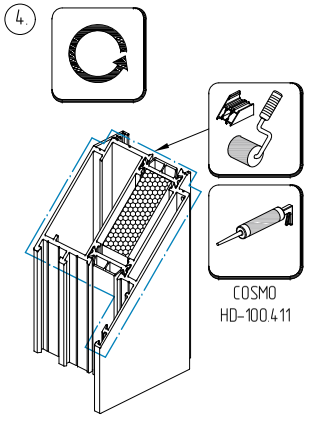

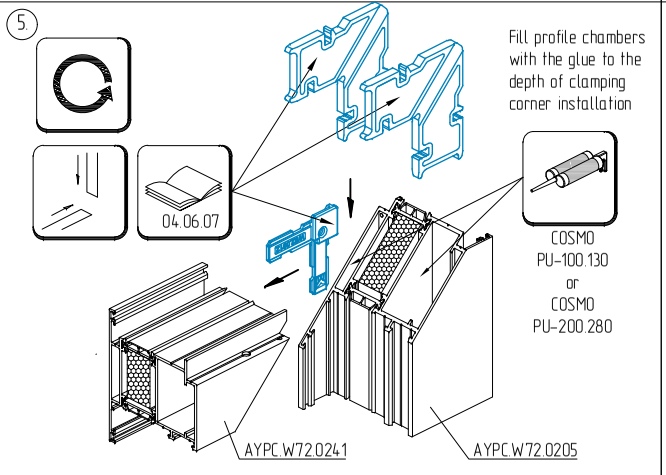

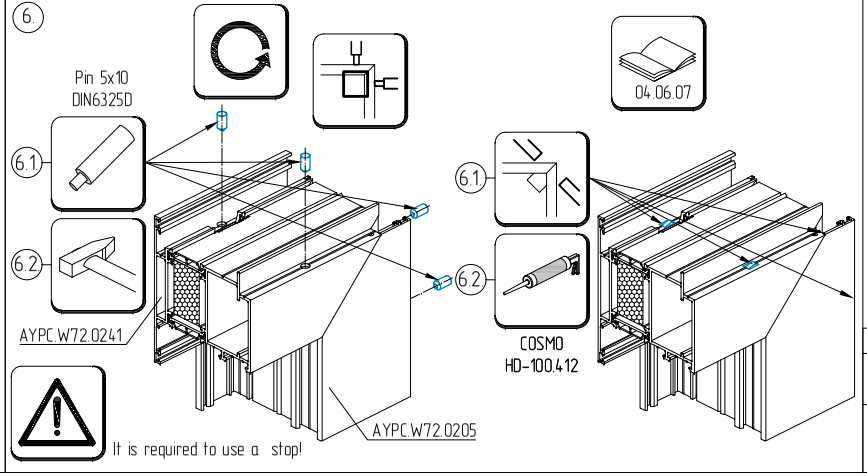

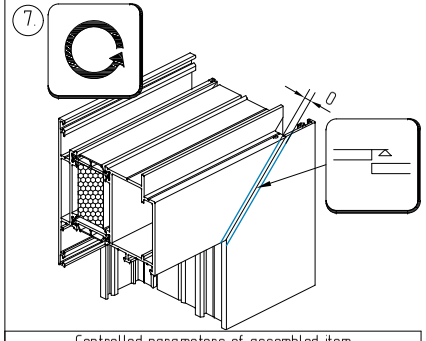

Controlled parameters of assembled item		
Name	Initial size intervals, mm	Limit deviation, mm
Diagonal length difference	≤ 1000 1000–2000 >2000	1.0 2.0 3.0

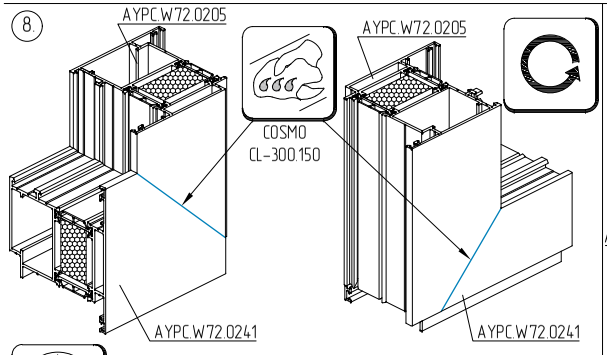

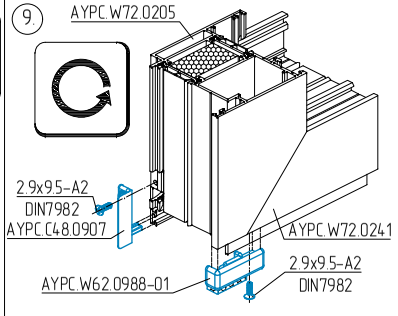

Applied plugs	
for passive left leaf	for passive right leaf
AYPC.C48.0907	AYPC.C48.0906
AYPC.W62.0988-01	AYPC.W62.0988

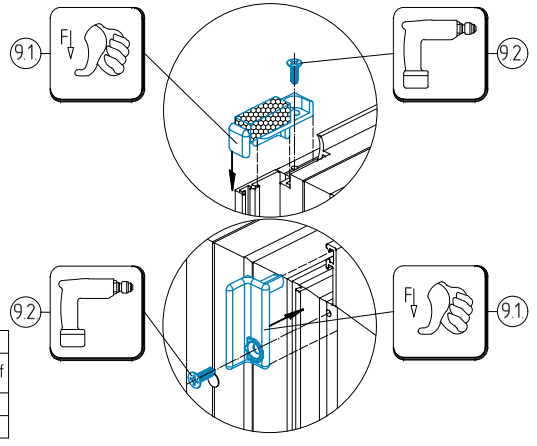

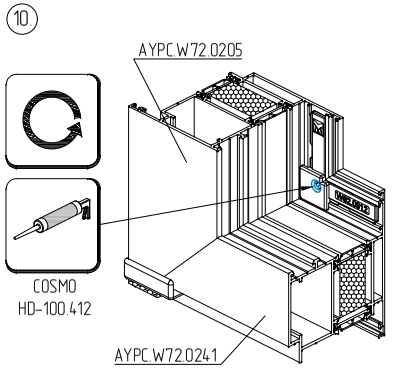

Sequence of assembly of the leaf corner connection No 11

1. 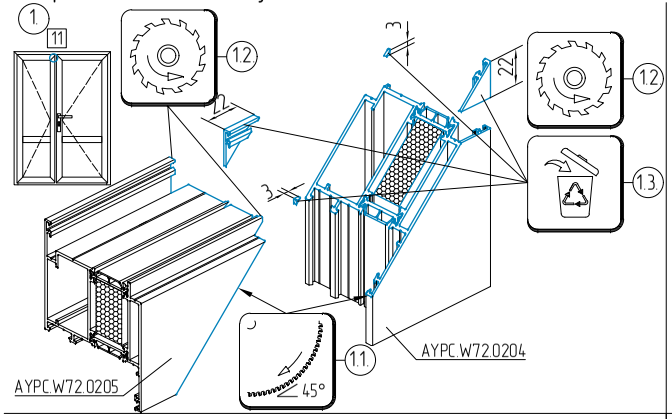

2. Ø5 mm holes processing is to be skipped for corner connection by crimping method in step 2

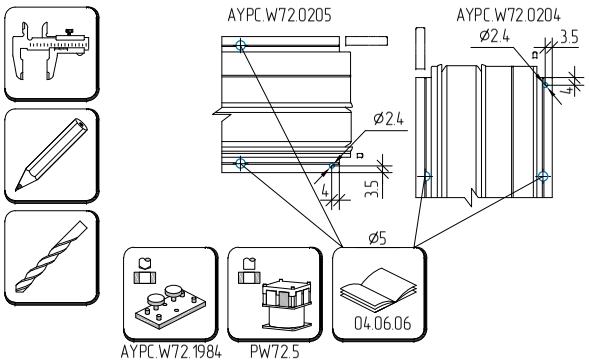

3. 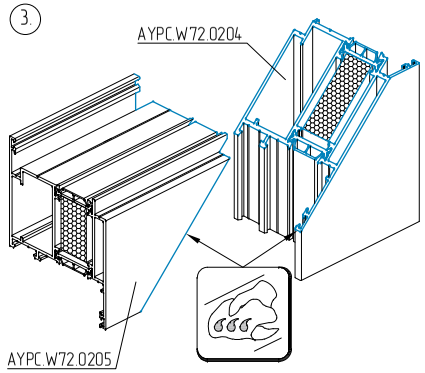

4. 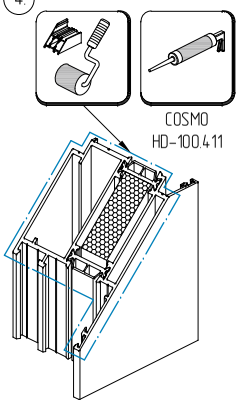

5. 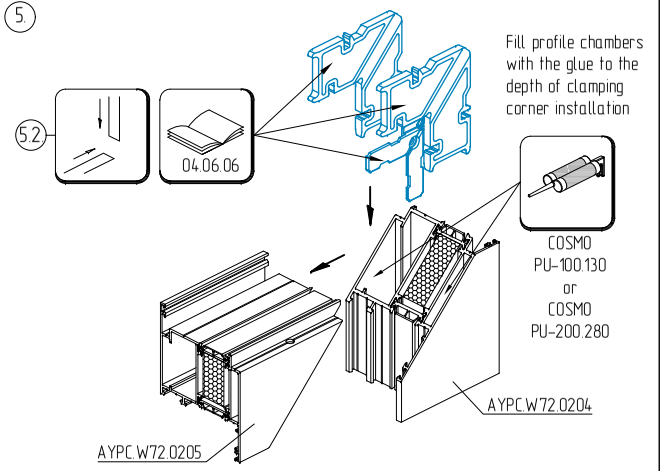

6. 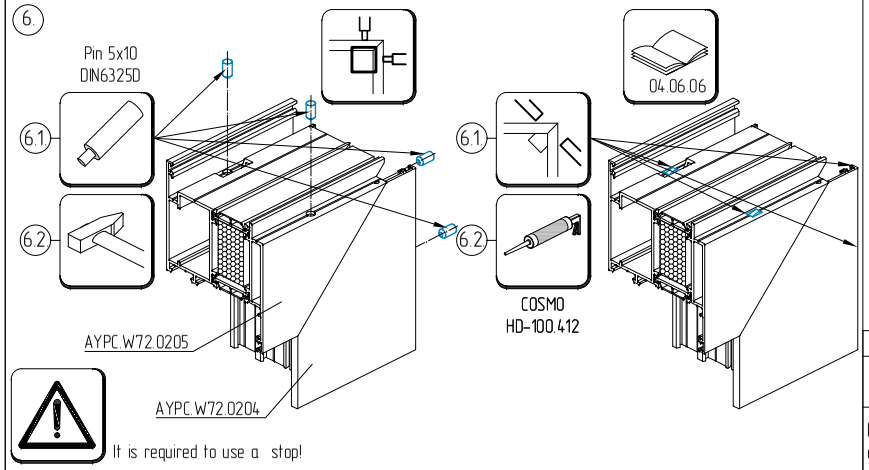

It is required to use a stop!

7. 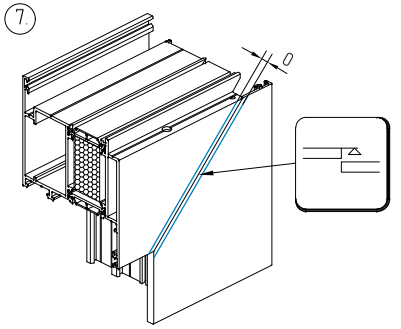

Controlled parameters of assembled item		
Name	Initial size intervals, mm	Limit deviation, mm
Diagonal length difference	≤ 1000 1000–2000 >2000	1.0 2.0 3.0

8. 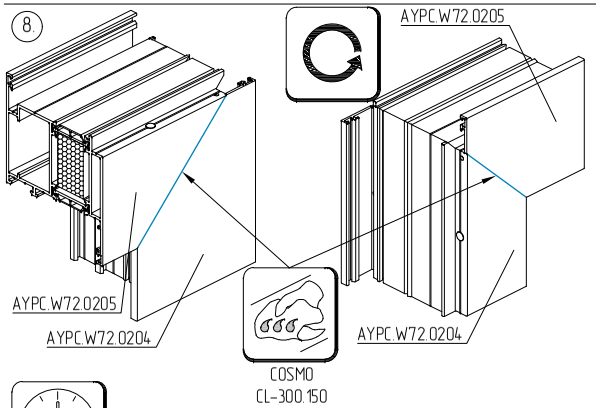

Place the assembled article away until the glue is completely dry according to the recommendations of the glue supplier

9. 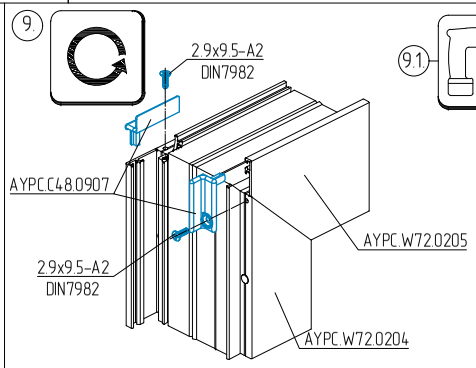

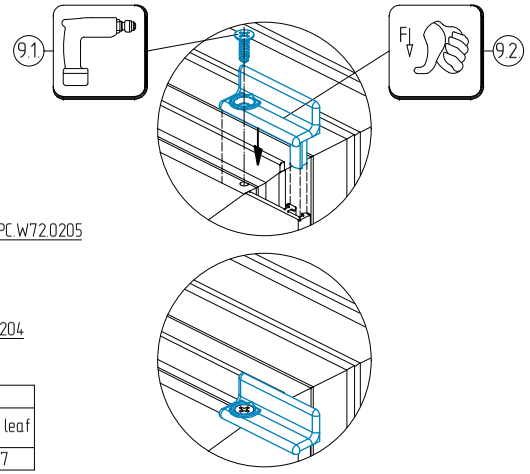

Applied plugs	
for passive left leaf	for passive right leaf
AYPC.C48.0906	AYPC.C48.0907

10. 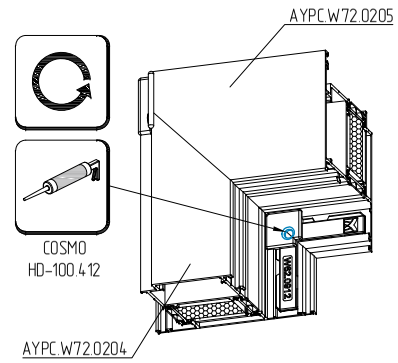

Sequence of assembly of the leaf corner connection No 12

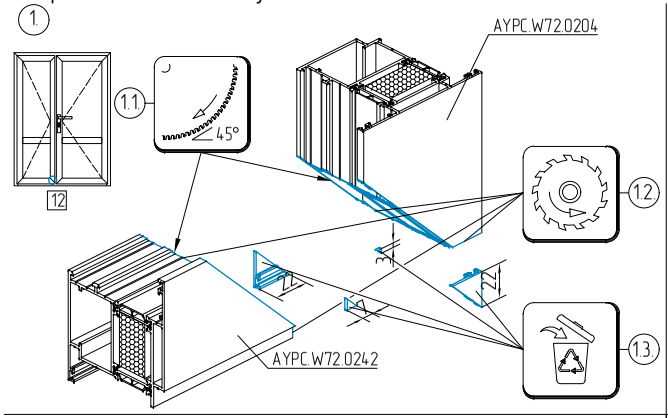

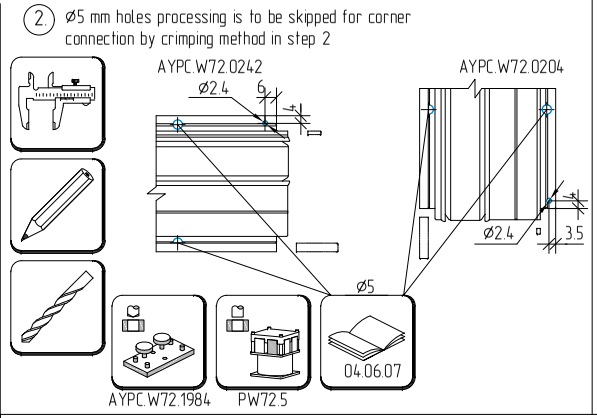

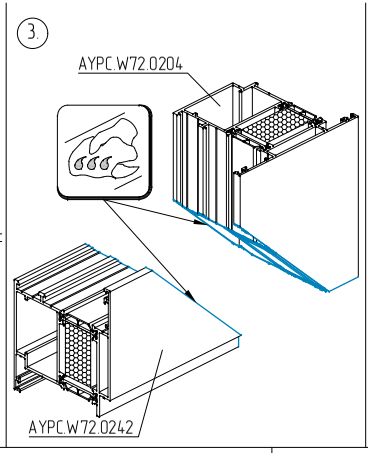

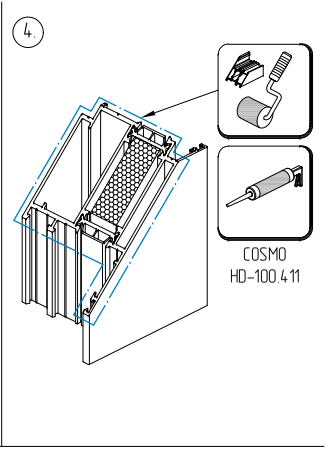

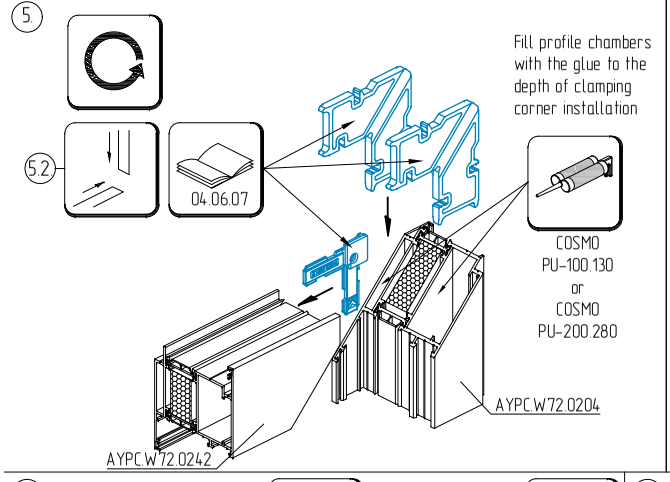

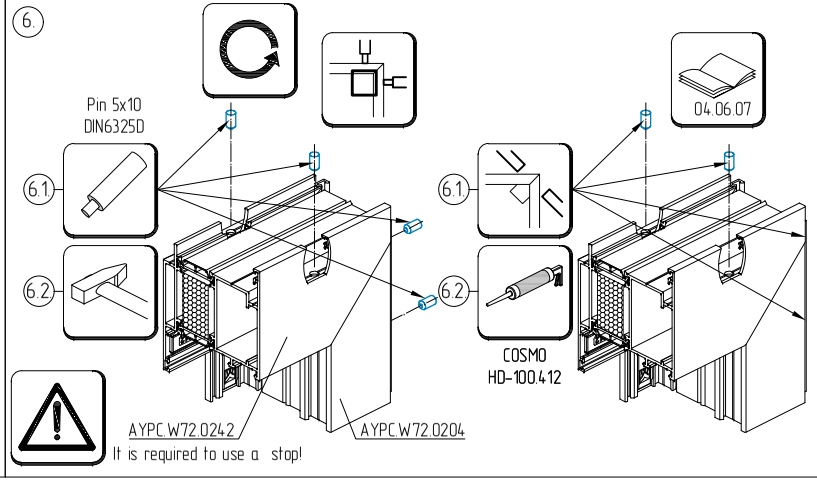

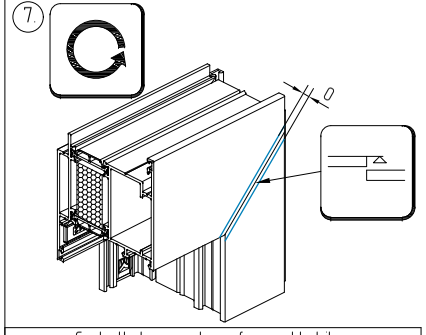

Controlled parameters of assembled item		
Name	Initial size intervals, mm	Limit deviation, mm
Diagonal length difference	≤ 1000 1000–2000 >2000	1.0 2.0 3.0

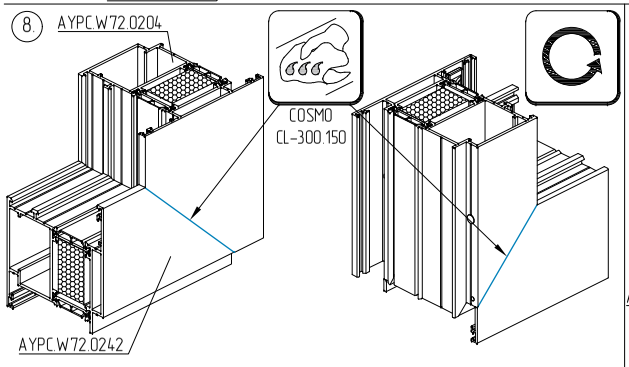

Place the assembled article away until the glue is completely dry according to the recommendations of the glue supplier

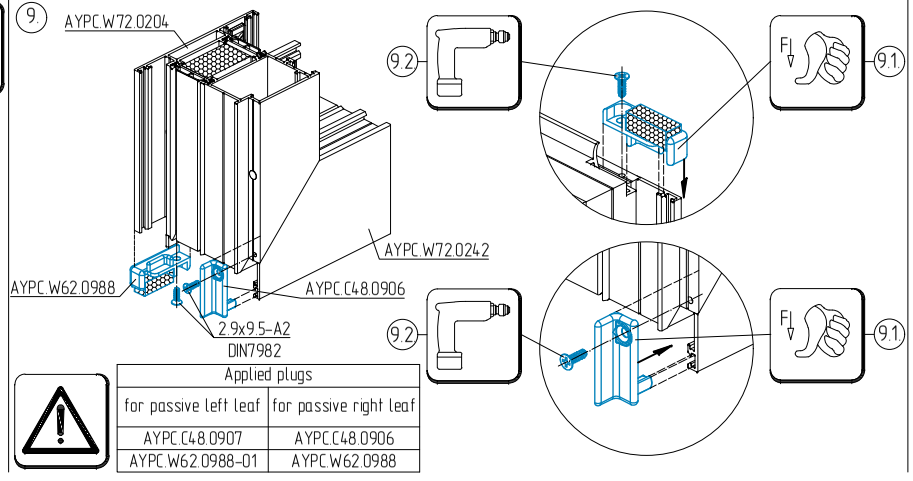

Applied plugs	
for passive left leaf	for passive right leaf
AYPC.C48.0907	AYPC.C48.0906
AYPC.W62.0988-01	AYPC.W62.0988

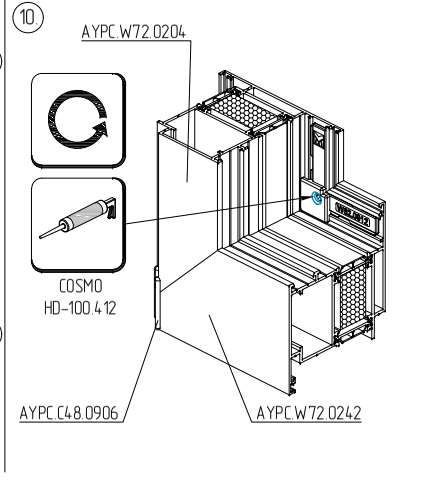

Sequence of assembly of the leaf and basement profile corner connection No 13

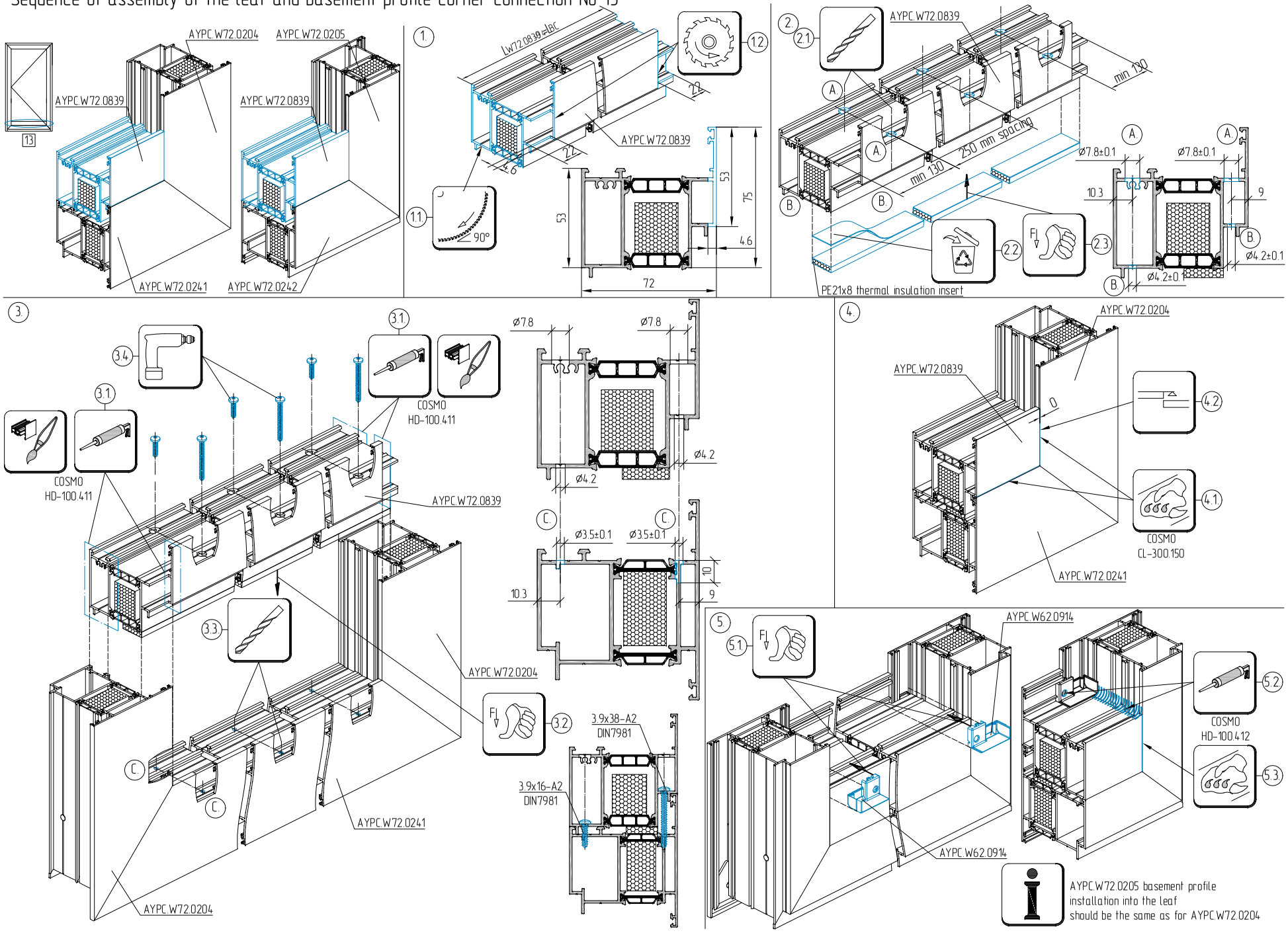

Accessories and profile machining for transom bar installation into the leaf at an angle α = 90°

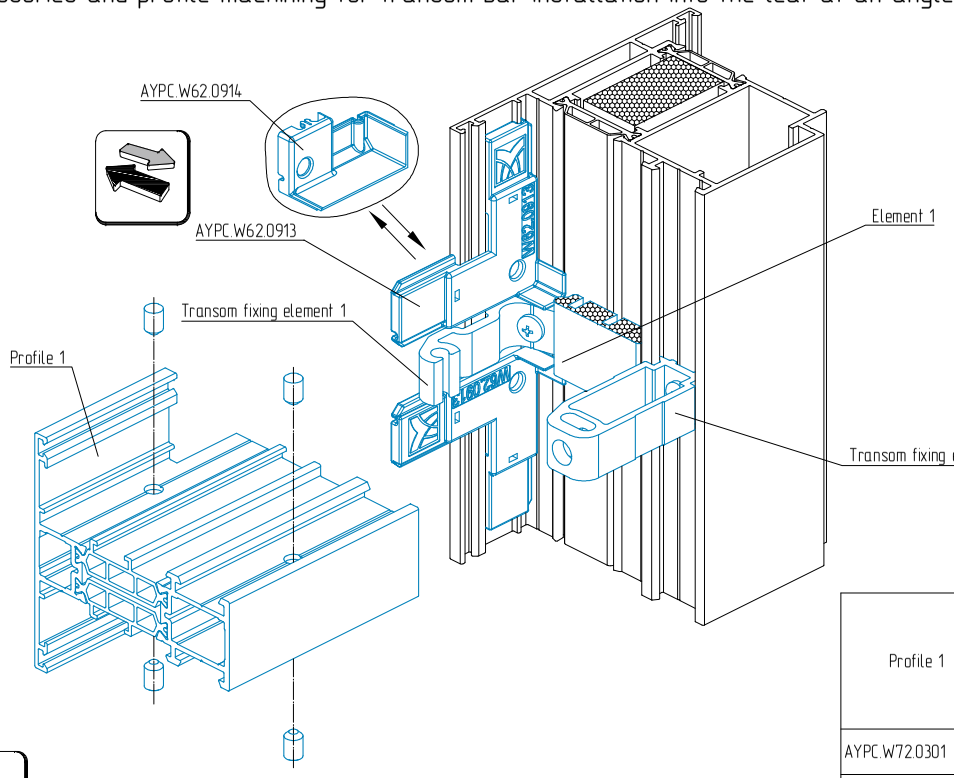

Profile machining scheme 1

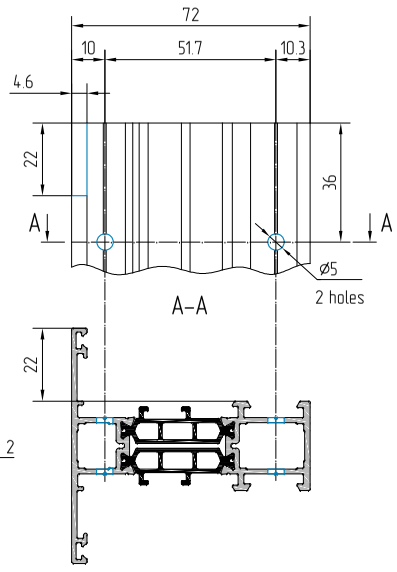

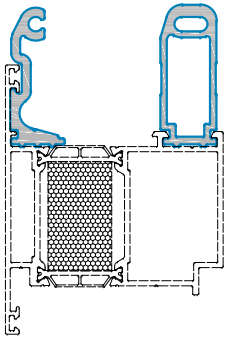

Correct positioning of transom fixing element

AYPC.W62.0913 is to be installed before assembling.
AYPC.W62.0914 is to be installed after assembling

Profile 1	Transom fixing element				Element 1		
	Transom fixing element 1		Transom fixing element 2				
	Article	Quantity, pcs	Article	Quantity, pcs	Article	Quantity, pcs	Drawing
AYPC.W72.0301	AYPC.W62.0951	1	AYPC.W62.0973	1	AYPC.W62.0916	1	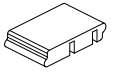
AYPC.W72.0302	AYPC.W62.0951-01	1	AYPC.W62.0973-01	1	AYPC.W62.0916-01	1	
AYPC.W72.0303	AYPC.W62.0951-02	1	AYPC.W62.0973-02	1	AYPC.W62.0916-02	1	

Transom fixing elements

AYPC.W62.0951

5x8 DIN3625

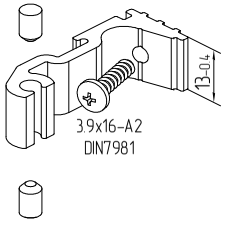

Initial profile – AYPC.W62.0701

AYPC.W62.0951-01

5x10 DIN3625D

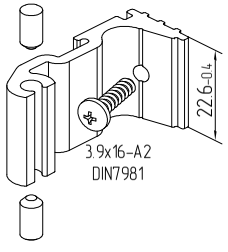

AYPC.W62.0951-02

5x10 DIN3625D

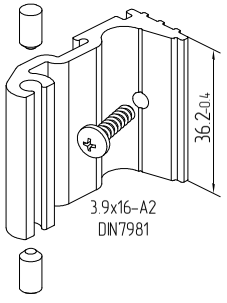

Initial profile – AYPC.W62.0705

AYPC.W62.0973

5x8 DIN3625

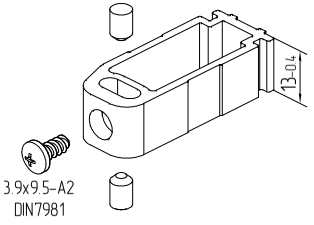

AYPC.W62.0973-01

5x10 DIN3625D

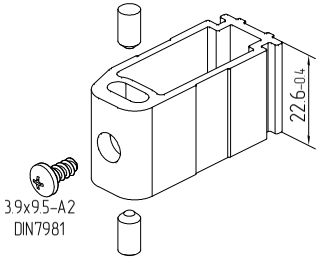

AYPC.W62.0973-02

5x10 DIN3625D

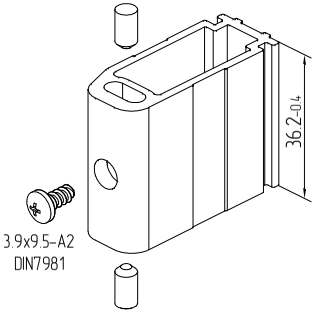

Make sure that the number of holes and installed pins corresponds to that specified in the instruction!
Reduction of the number of pins and holes will result in loss of strength characteristics of the door.
Prevent replacement of pins with self-tapping screws!

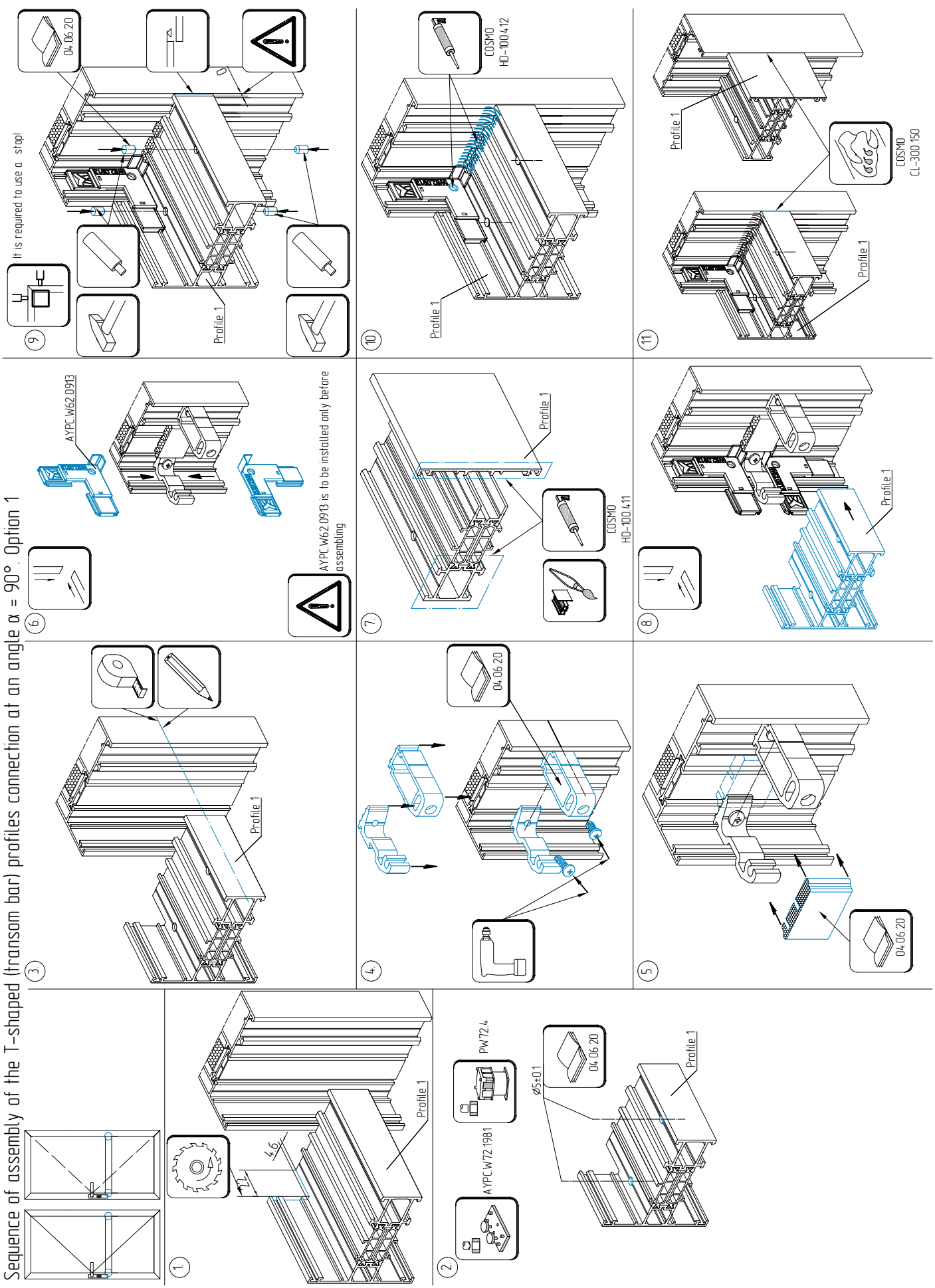
Sequence of assembly of the T-shaped (transom bar) profiles connection at an angle α = 90°. Option 1
1
Profile 1
46
2
AYPC.W72.1981
PW72.4
Ø5±0.1
04.06.20
Profile 1
3
Profile 1
4
04.06.20
5
04.06.20
6
AYPC.W62.0913
AYPC.W62.0913 is to be installed only before assembling
7
Profile 1
COSMO HD-100.411
8
Profile 1
9
It is required to use a stop!
04.06.20
Profile 1
10
COSMO HD-100.412
Profile 1
11
Profile 1
COSMO CL-300.150
Profile 1

Sequence of assembly of the T-shaped (transom bar) profiles connection at an angle α = 90°. Option 2

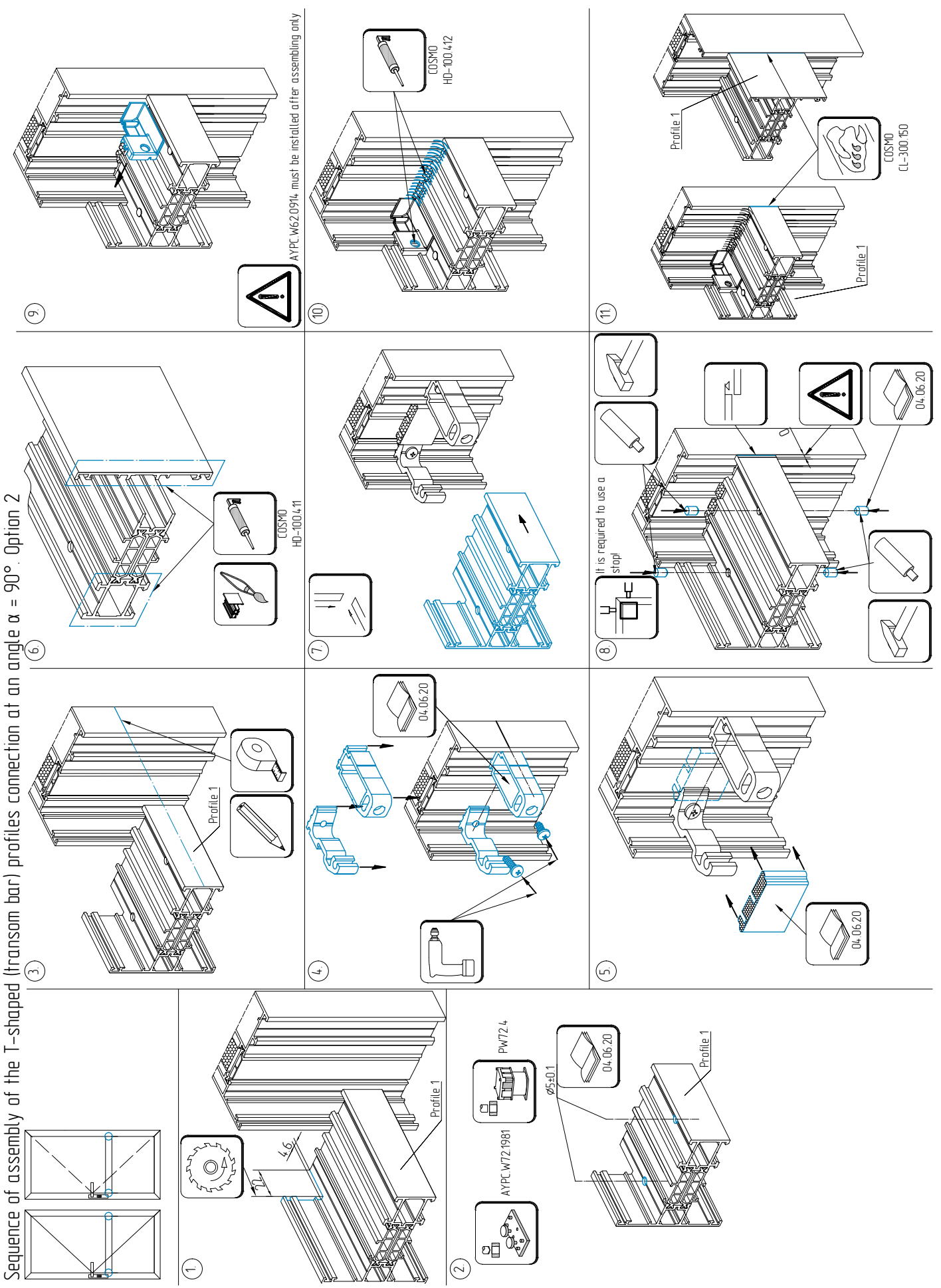

Machining of profile drainage holes. Visible drainage system

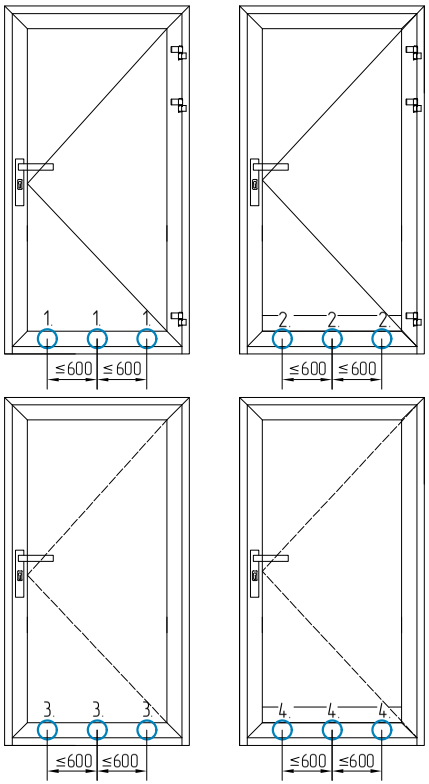

It is prohibited to change the size of the holes! Improper operating of drainage system is possible

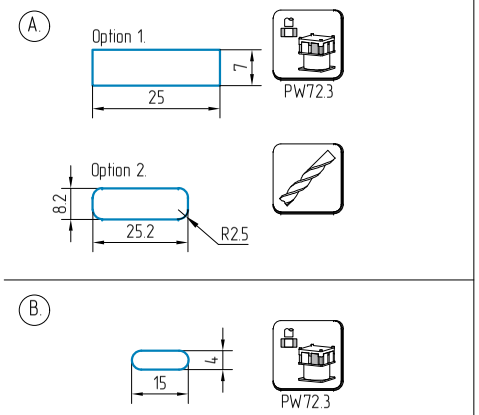

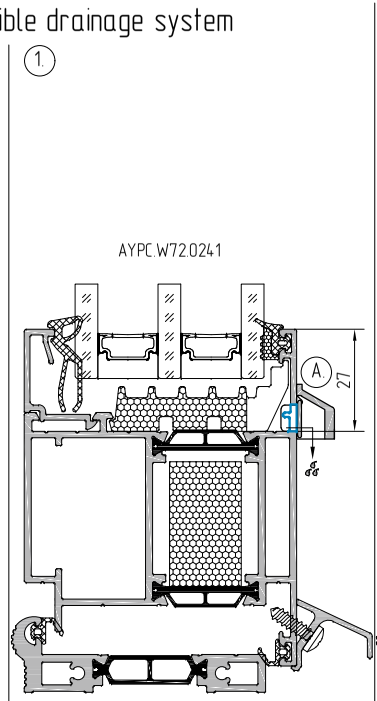

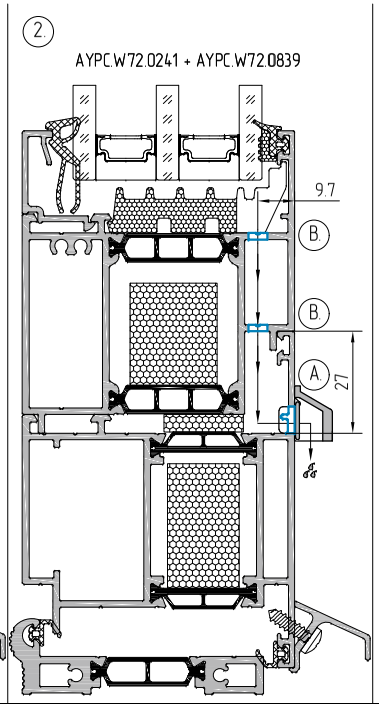

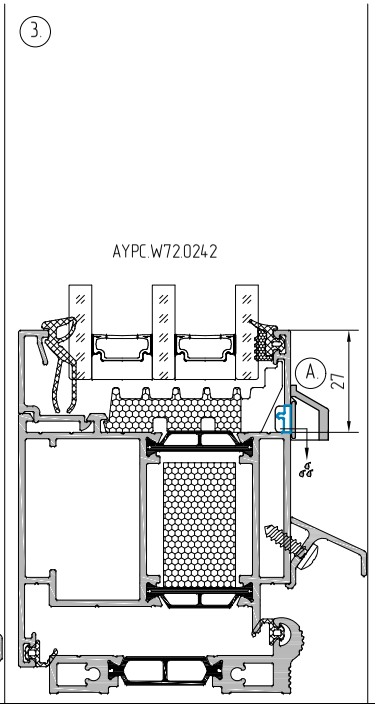

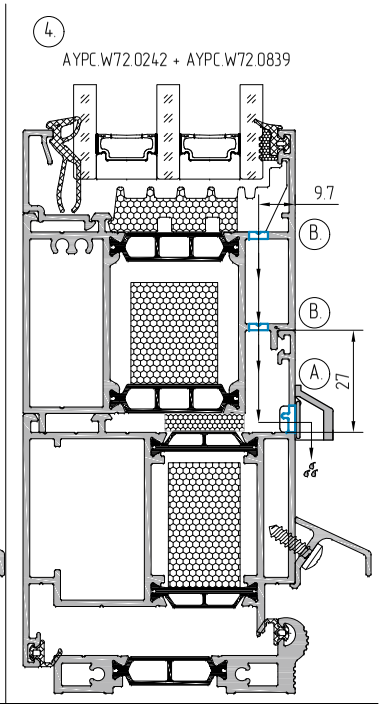

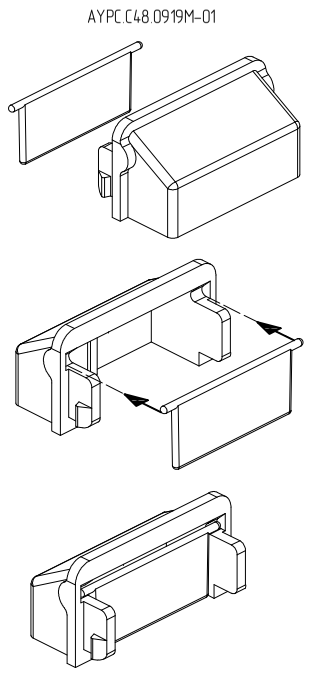

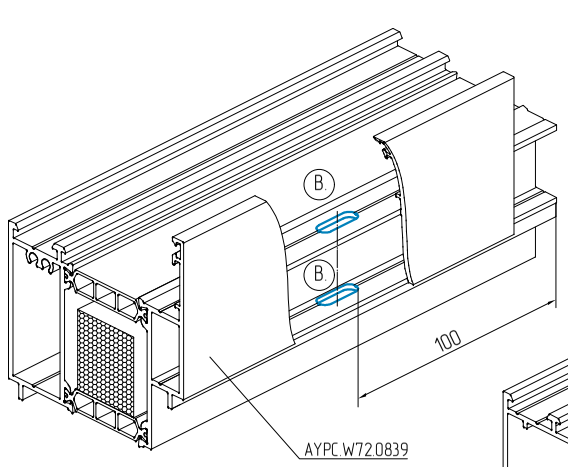

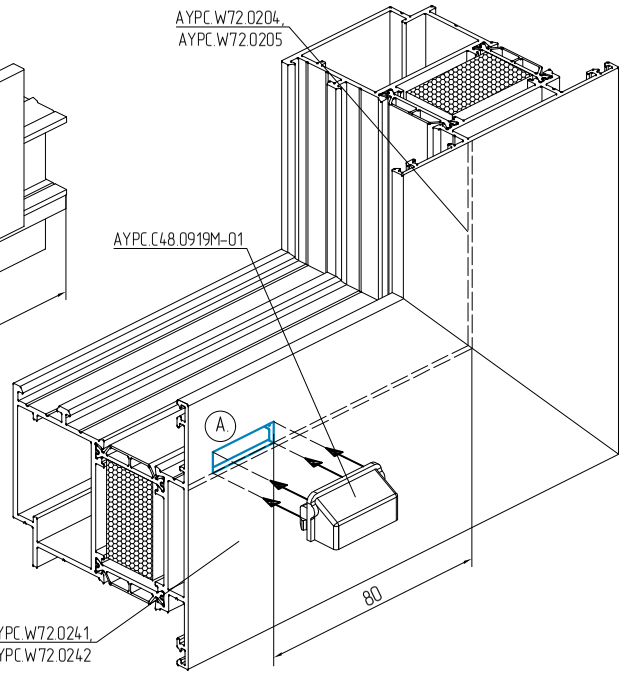

Machining of profile drainage holes. Concealed drainage system

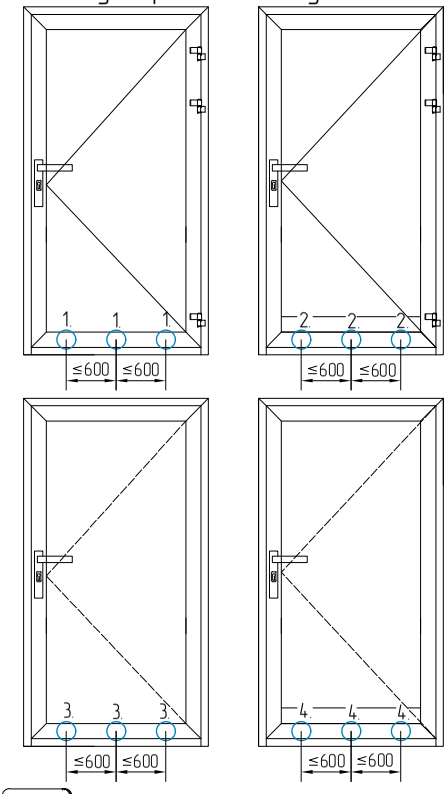

It is prohibited to change the size of the holes! Improper operating of drainage system is possible

A.

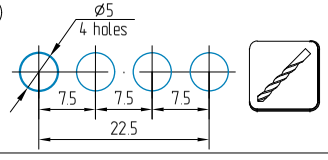

B.

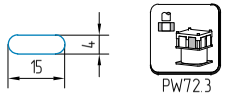

C.

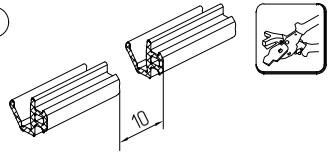

1.

AYPC.W72.0241

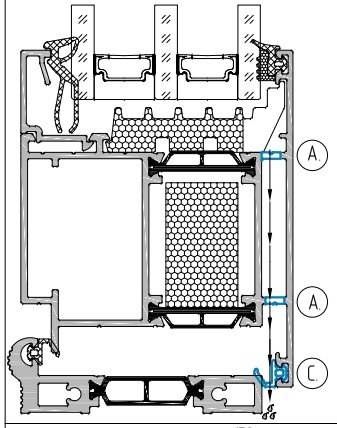

2.

AYPC.W72.0241 + AYPC.W72.0839

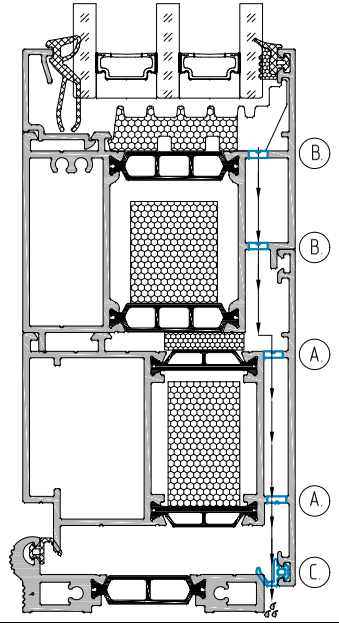

3.

AYPC.W72.0242

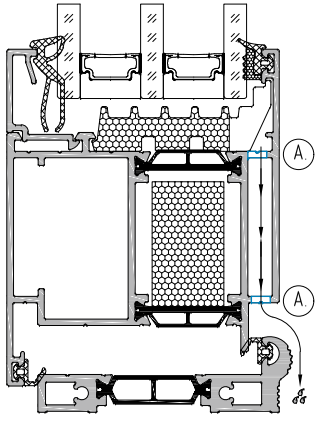

4.

AYPC.W72.0242 + AYPC.W72.0839

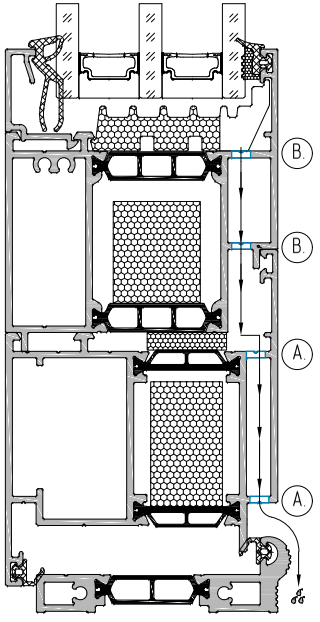

AYPC.W72.0241

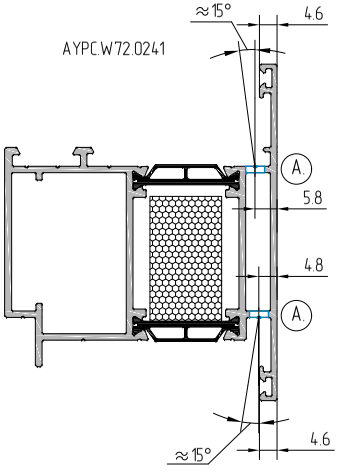

AYPC.W72.0839

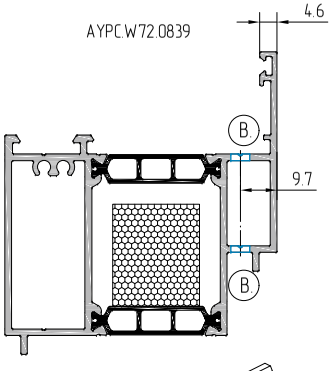

AYPC.W72.0242

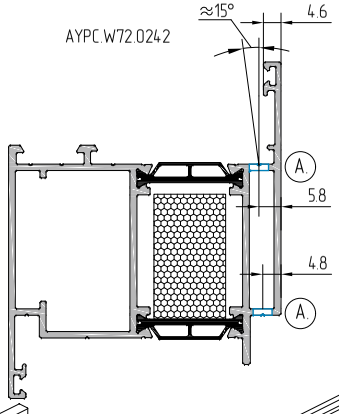

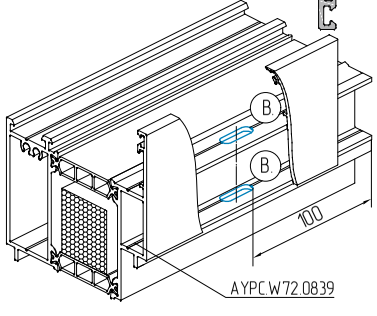

Remove FRK98 (C) gasket only from AYPC.W72.0241 leaf profile

AYPC.W72.0204,
AYPC.W72.0205

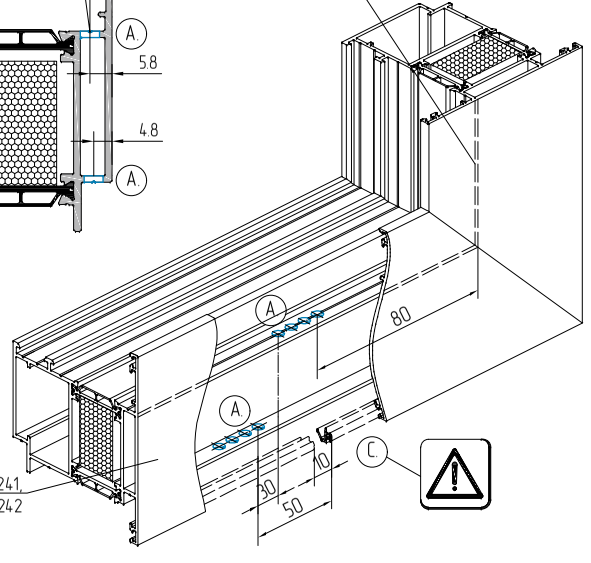

AYPC.W72.0241,
AYPC.W72.0242

Machining of profile ventilation holes

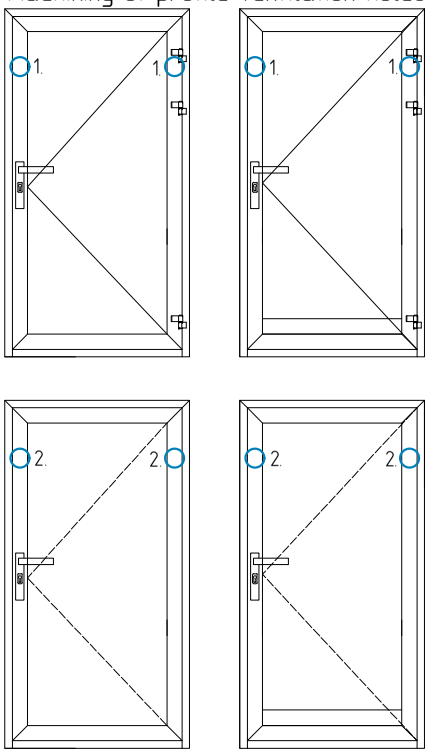

It is prohibited to change the size of the holes! Improper operating of ventilation system is possible

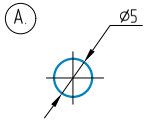

1

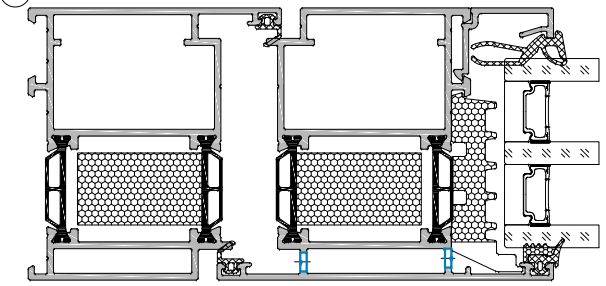

AYPC.W72.0204

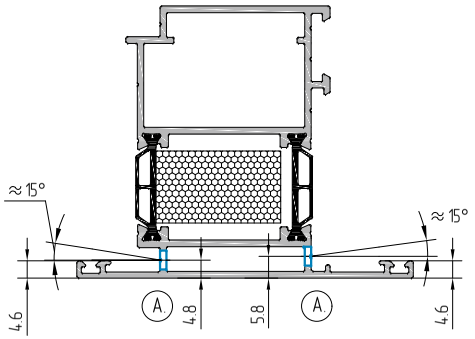

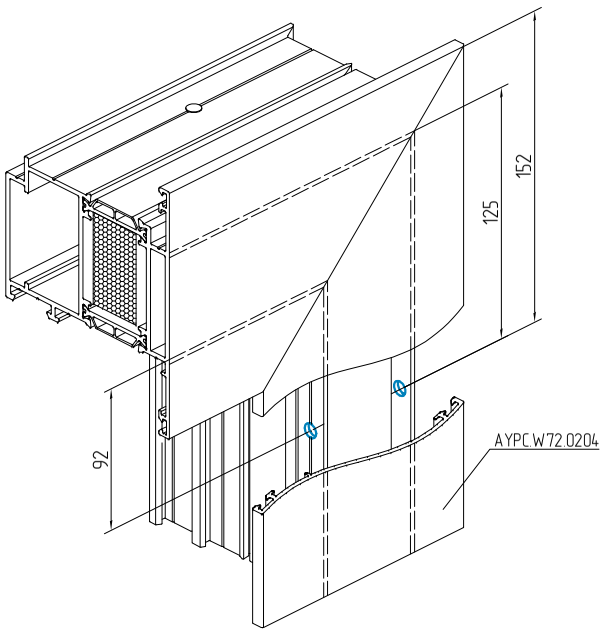

2

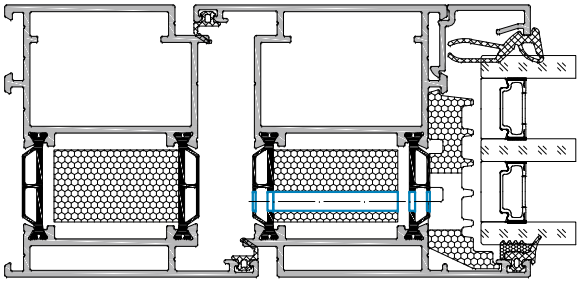

AYPC.W72.0205

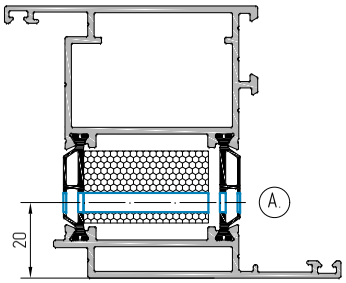

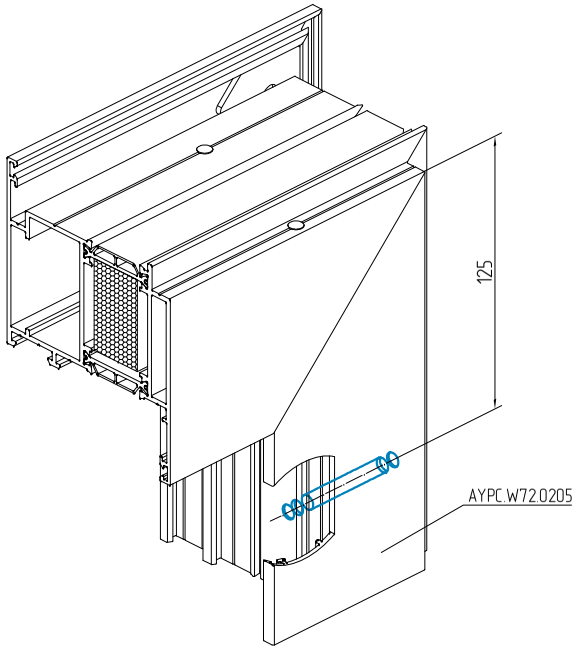

ALUTECH PROFILE SYSTEMS

Installation of bearing and leveling supports

Infill unit supports installation

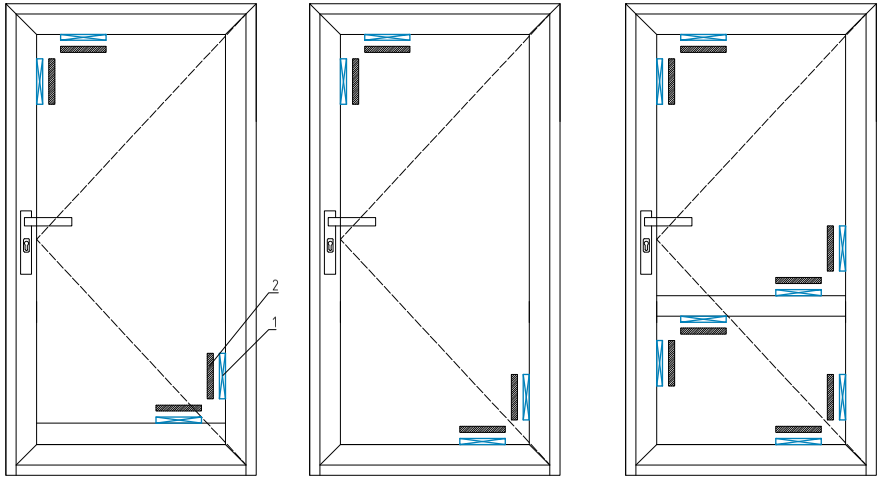

1. – bearing support;
2. – leveling support.

For size selection of leveling supports, see the section 01.04

Installation of bearing supports in passive leaf of the double doors is similar to the installation of bearing supports in active leaves

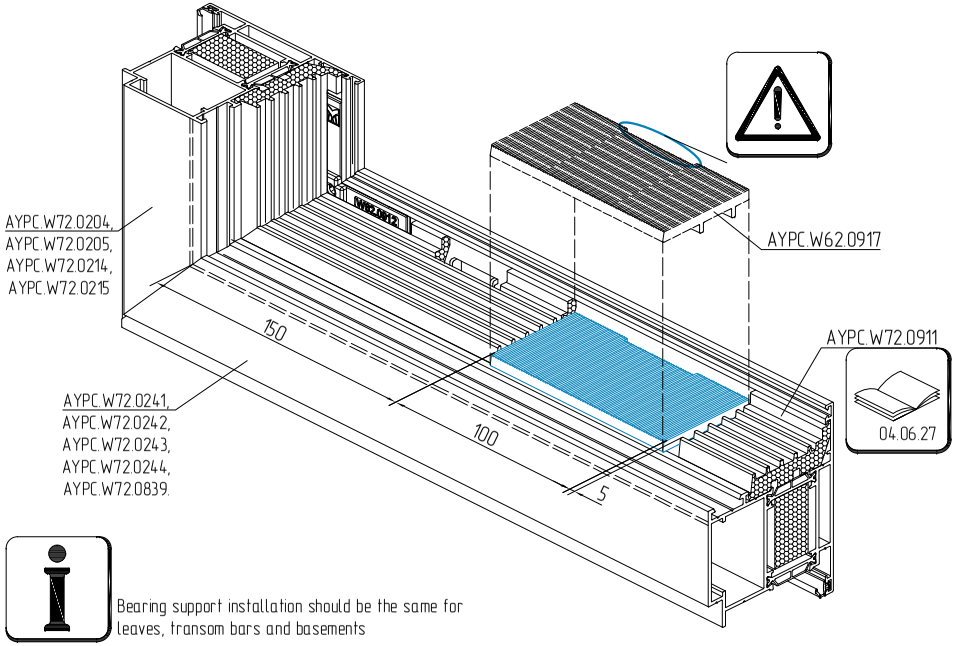

Bearing support installation should be the same for leaves, transom bars and basements

AYPC.W62.0917 bearing support

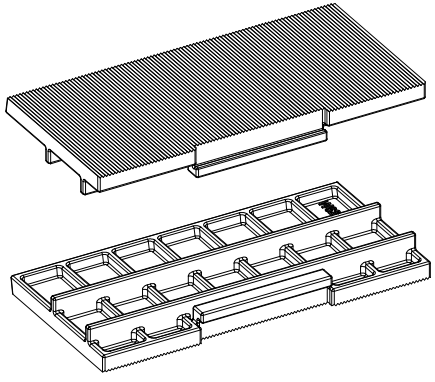

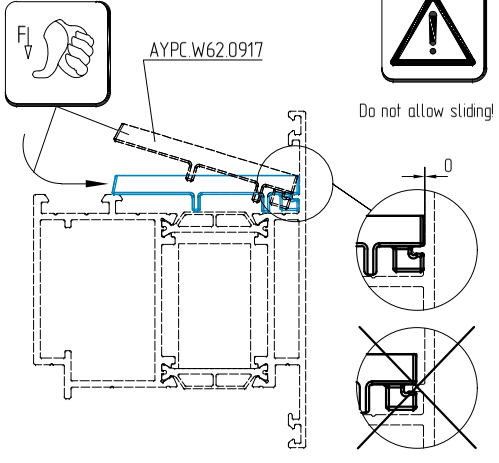

Example of leveling supports installation sequence

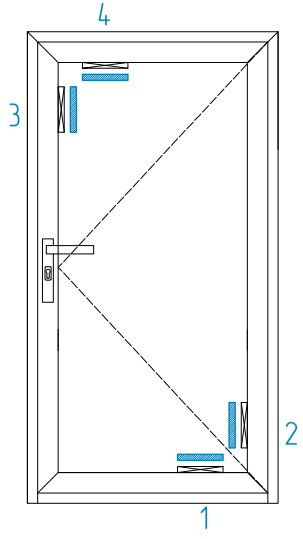

leveling support

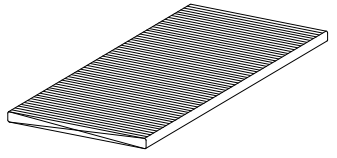

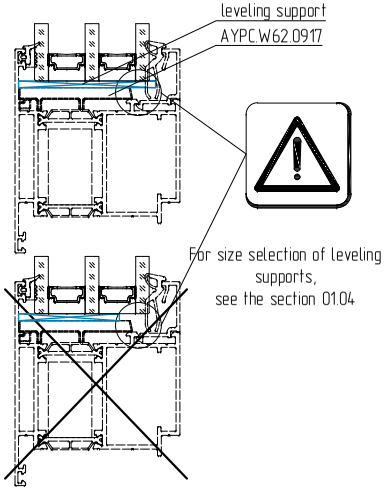

Seam sealing machining

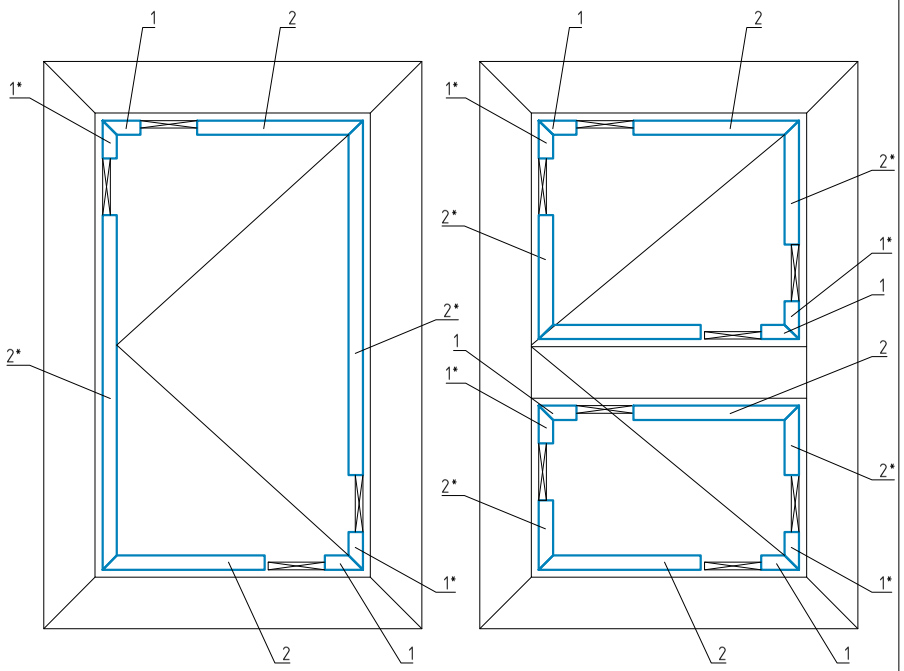

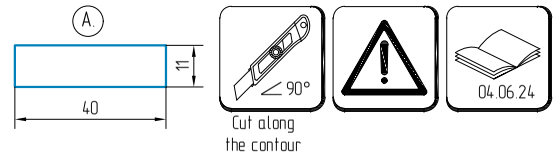

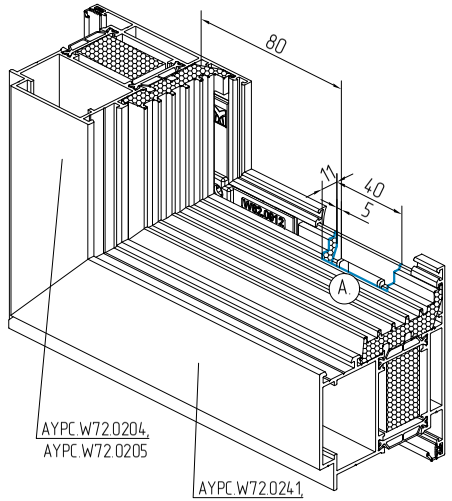

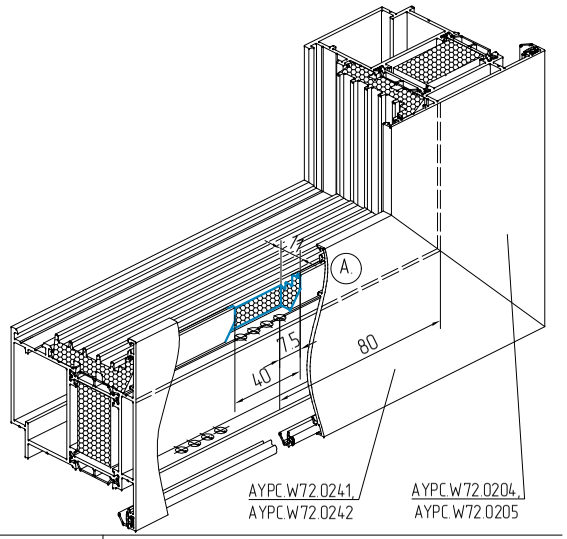

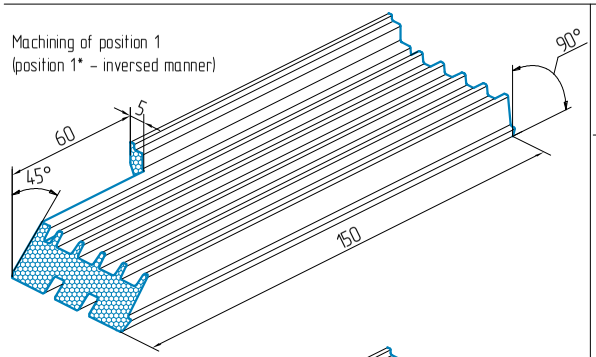

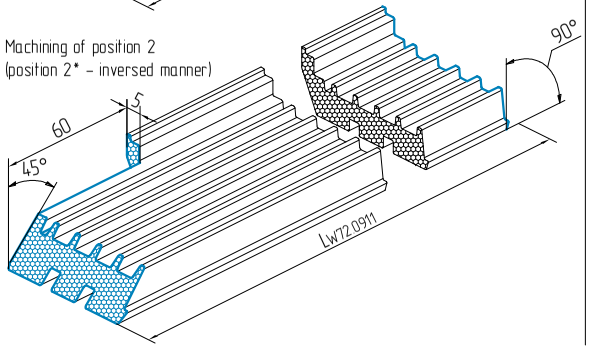

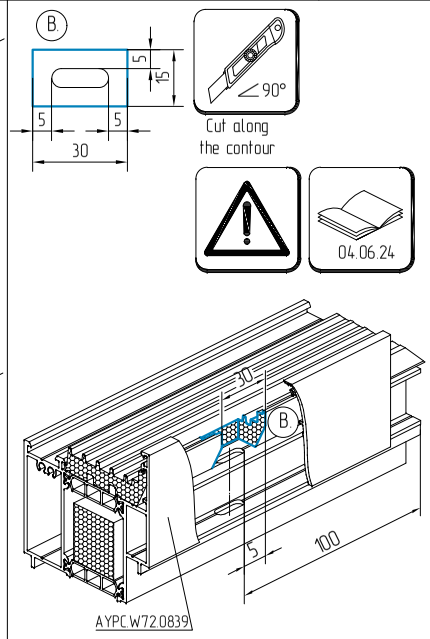

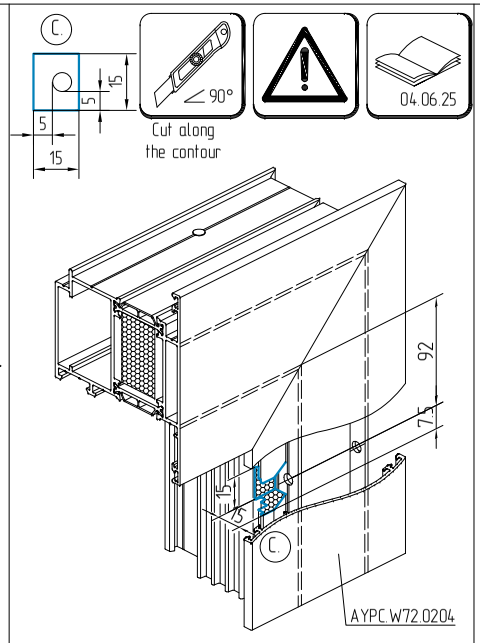

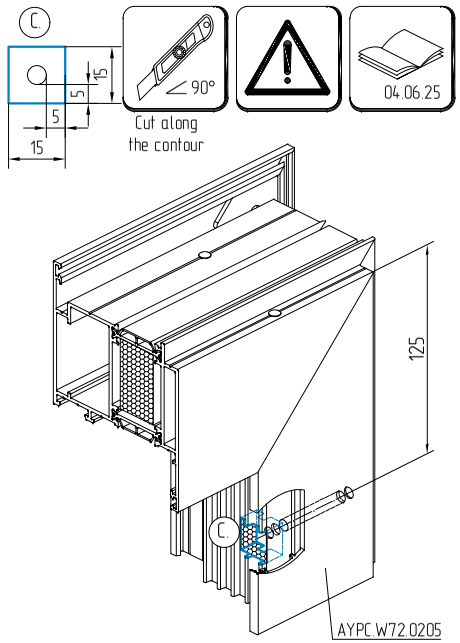

Cutting and installation schemes of FRK98 gasket and rubber corner into AYPC.W62.0977 frame

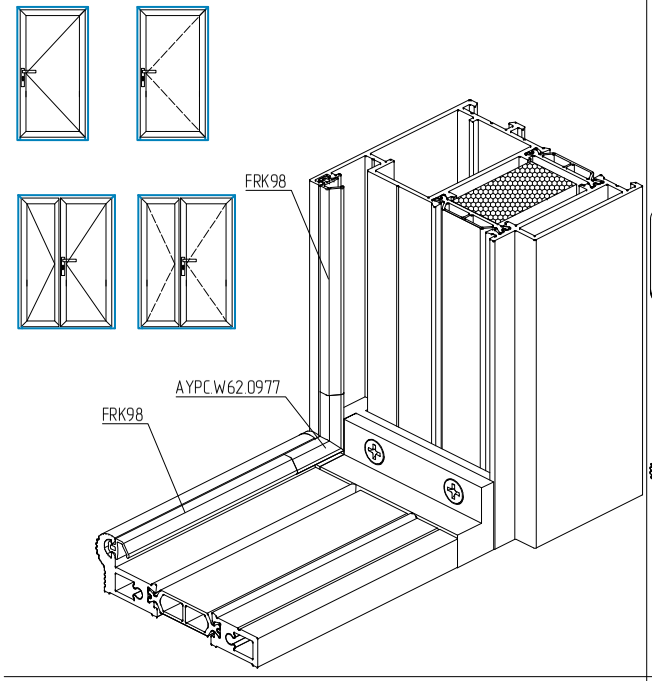

1

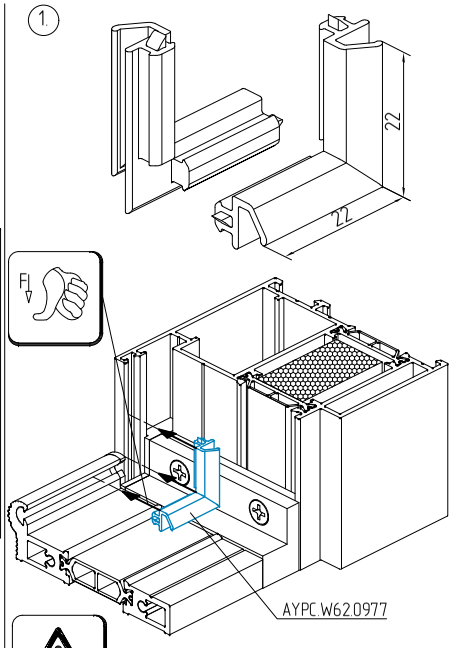

Do not allow deformations!

2

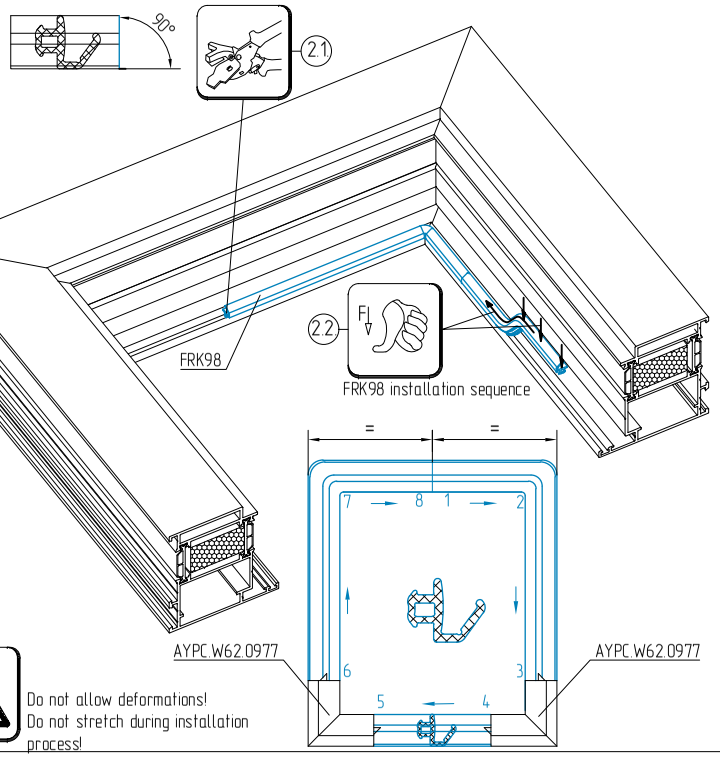

Do not allow deformations!
Do not stretch during installation process!

3

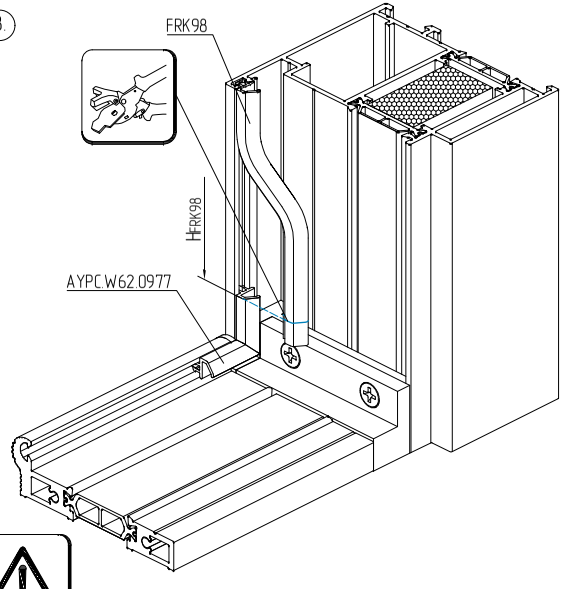

Cut FRK98 gasket with 1% extra length!

4

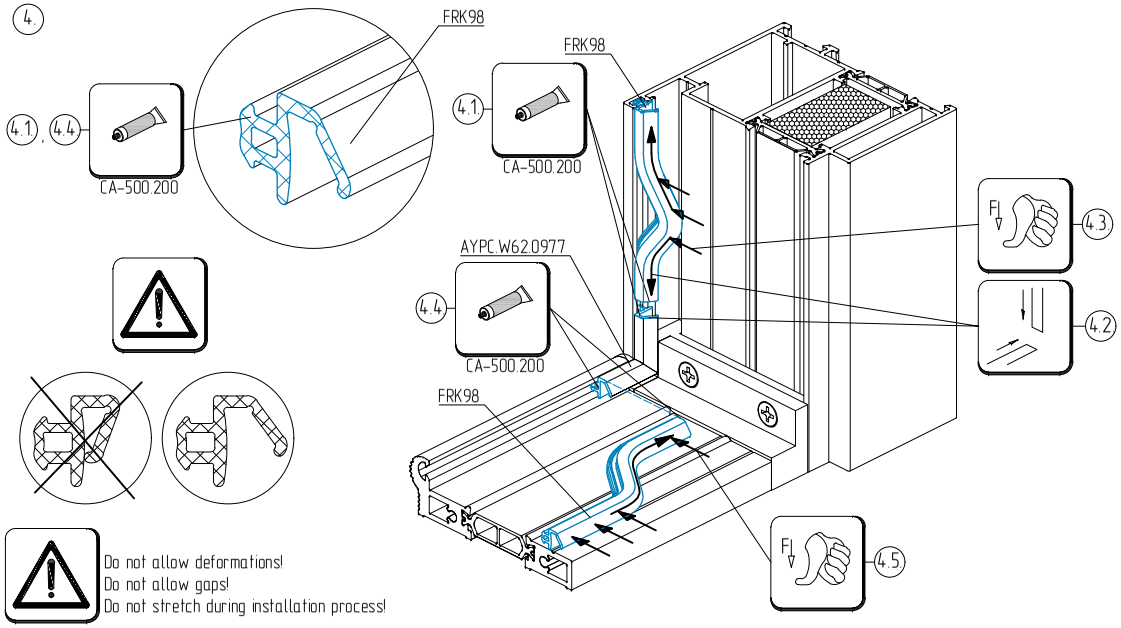

Do not allow deformations!
Do not allow gaps!
Do not stretch during installation process!

Cutting and installation of FRK98 gasket into the leaf

AYPC.W72.0204,
AYPC.W72.0241

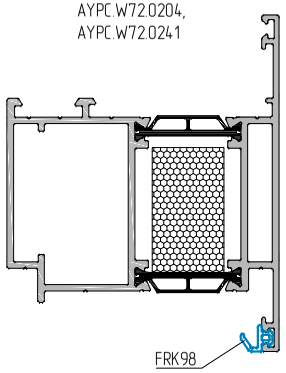

AYPC.W72.0205,
AYPC.W72.0242

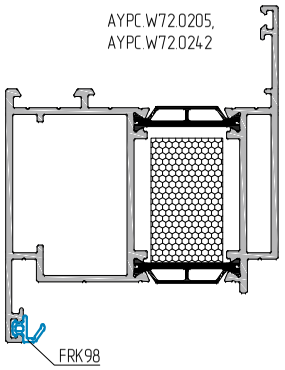

When doing concealed drainage, install FRK98 gasket taking into account (C) element cutting

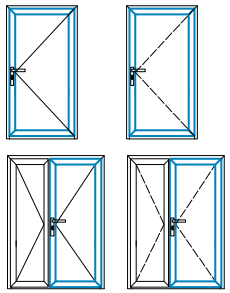

Installation sequence of FRK98 into active leaf

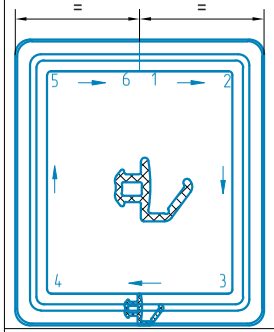

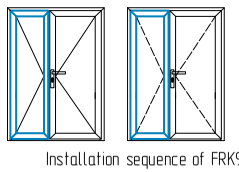

Installation sequence of FRK98 into passive leaf

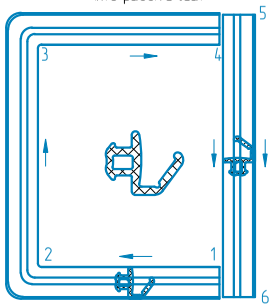

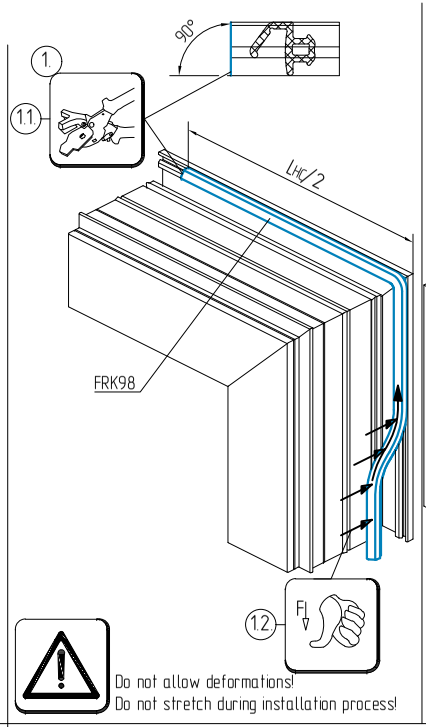

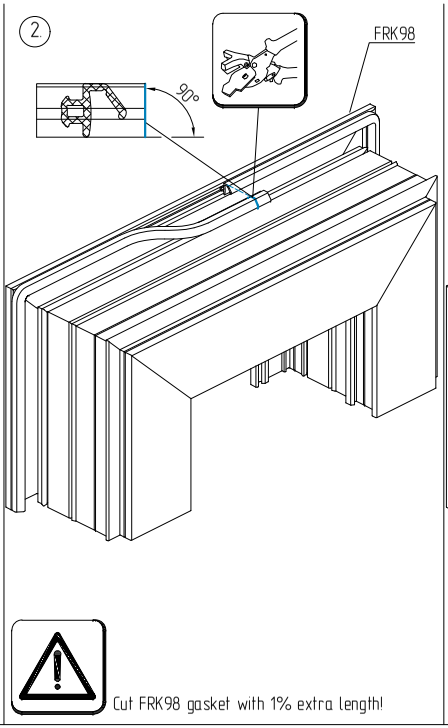

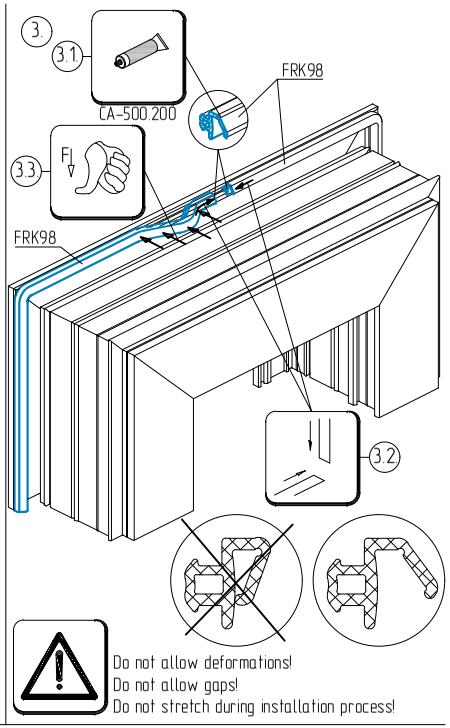

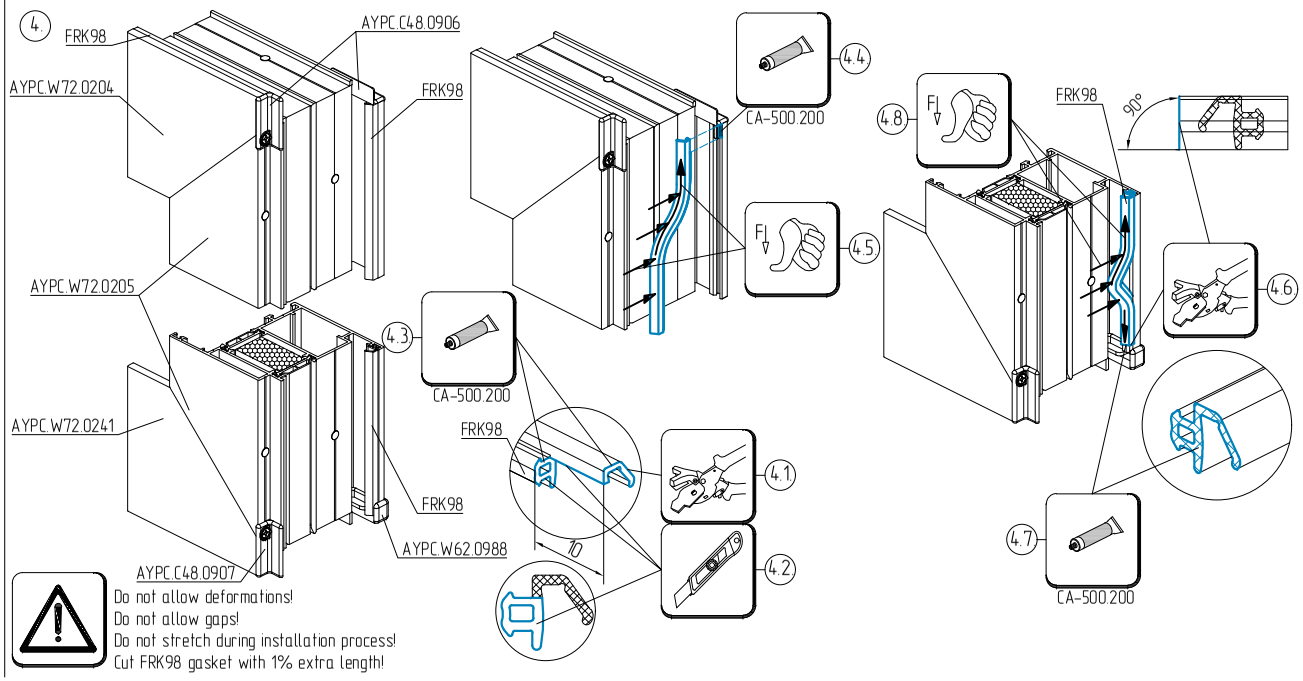

Machining and installation of drain profile on the door leaf

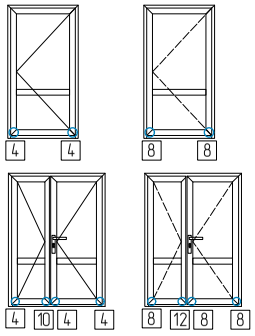

AYPC.C48.0611 drain profile cutting scheme

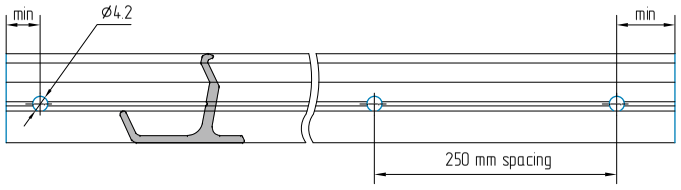

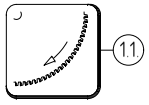

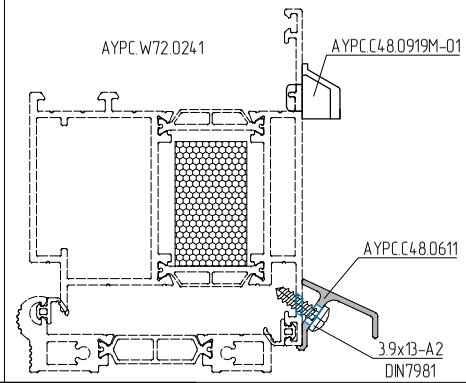

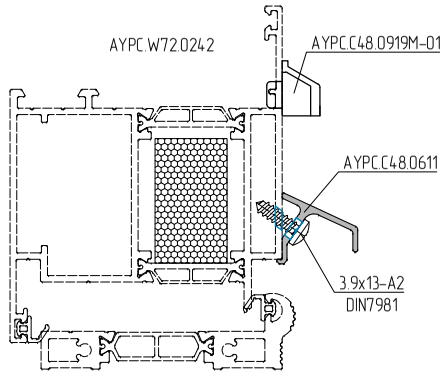

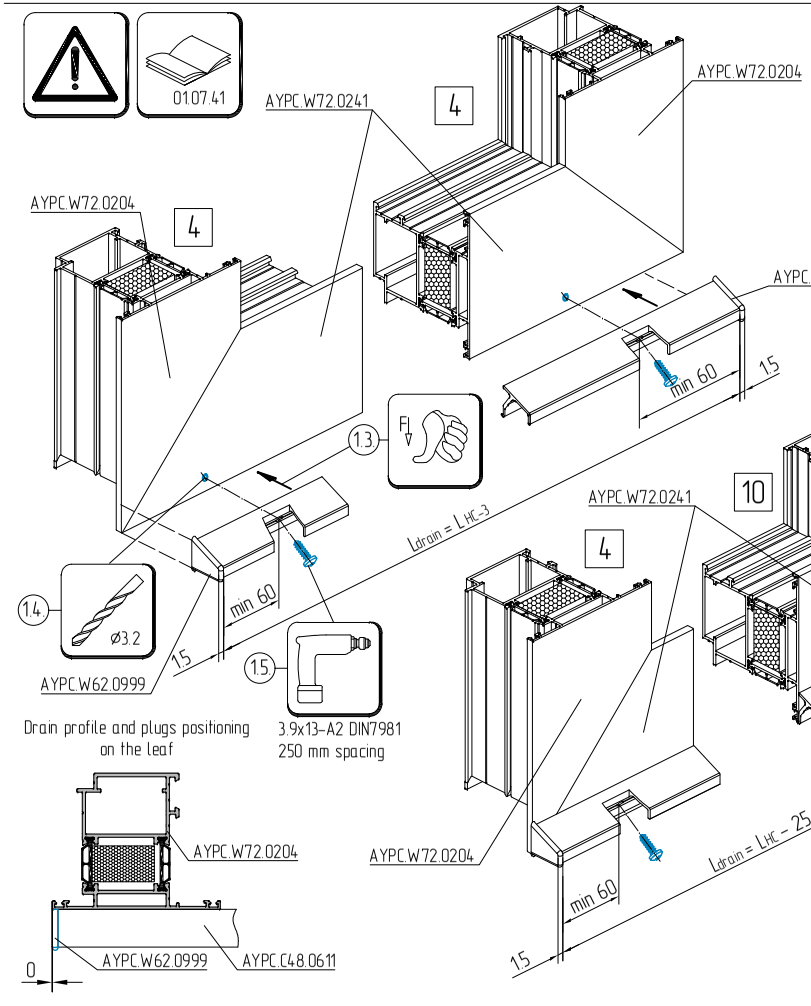

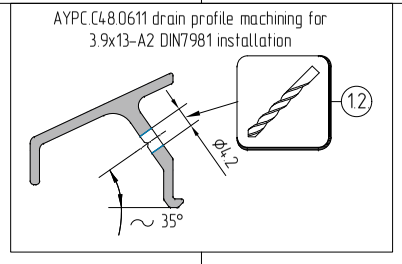

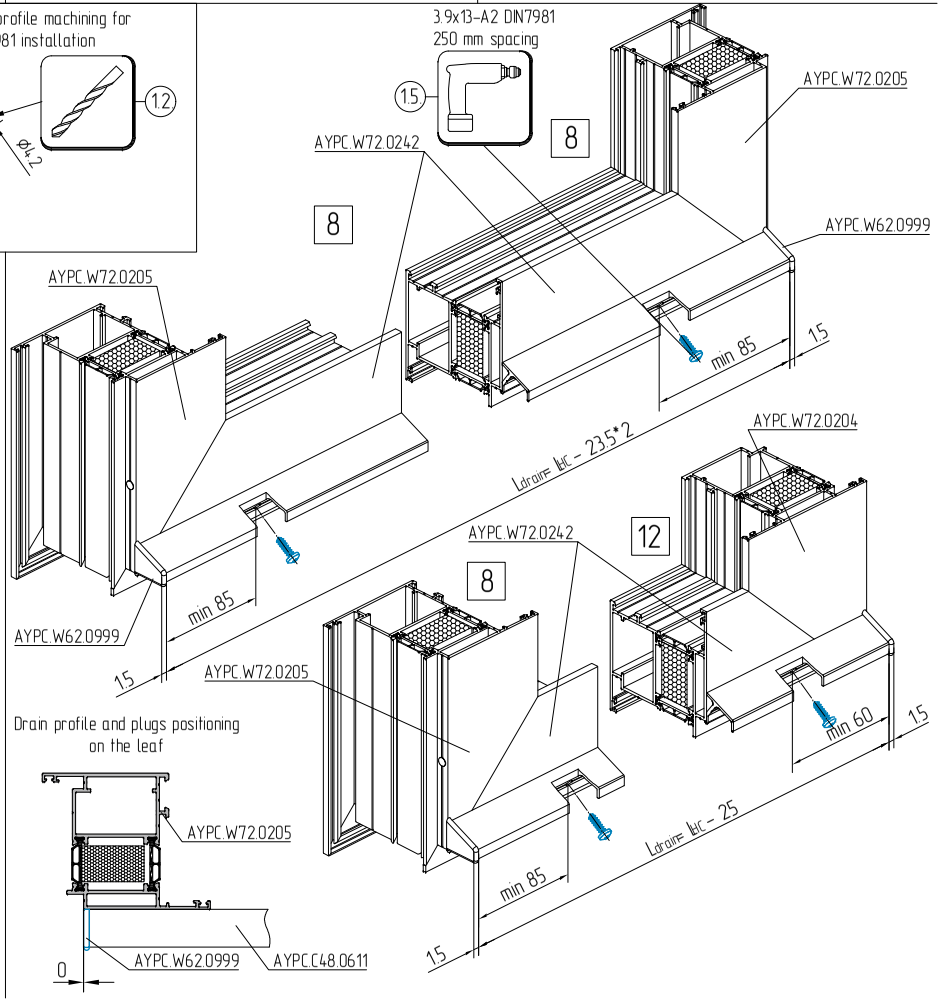

Installation of mounting plates

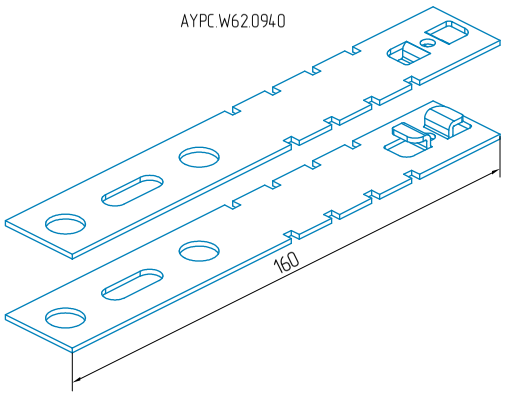

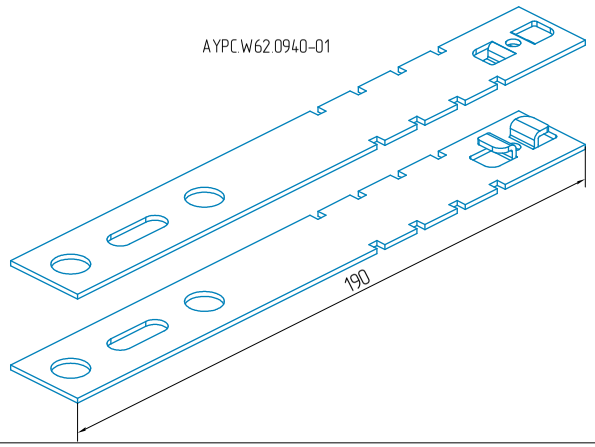

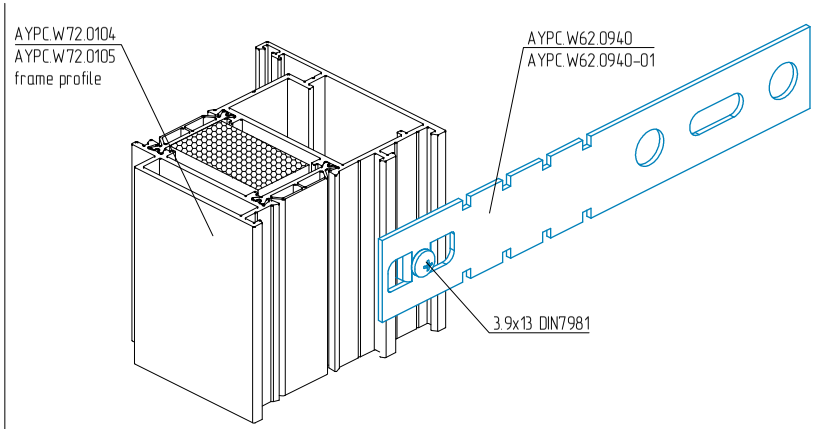

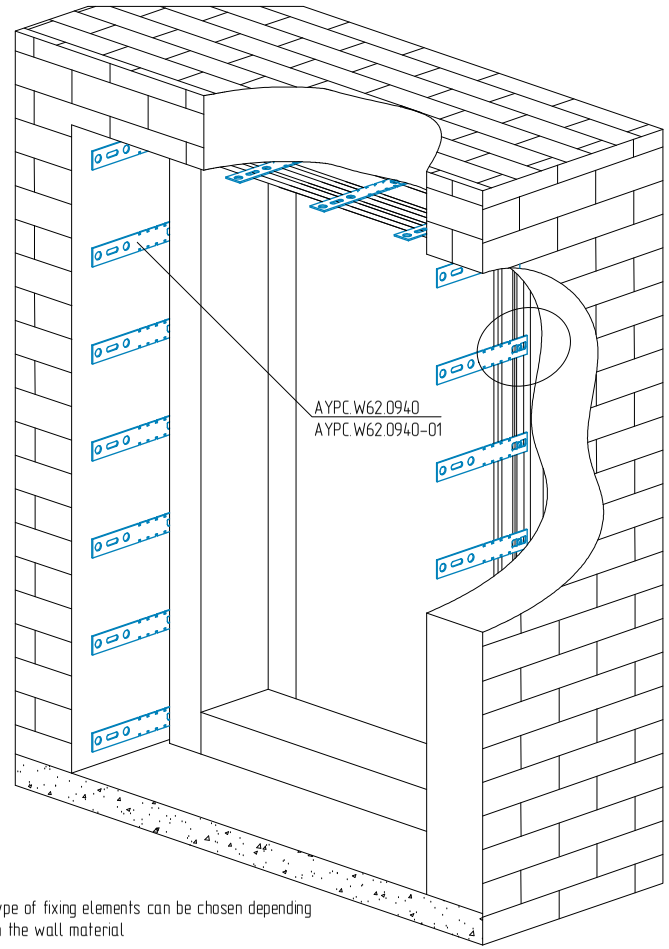

Type of fixing elements can be chosen depending on the wall material

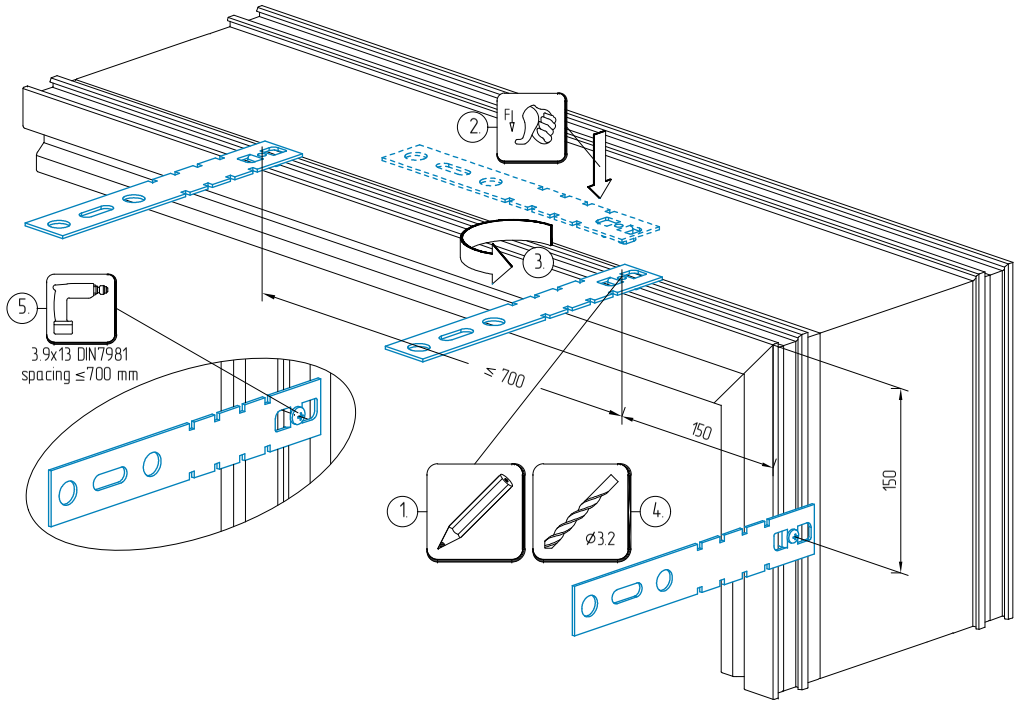

Door leaf dimensions
(minimum and maximum width / maximum high)

outward opening

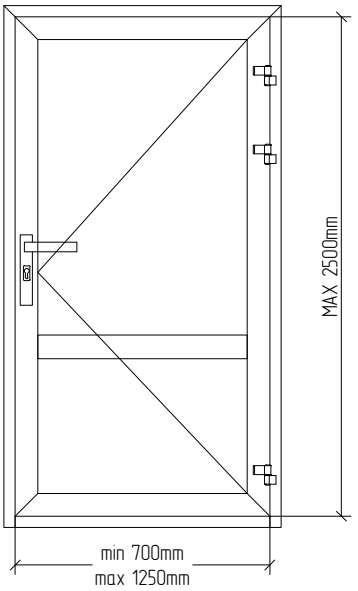

inward opening

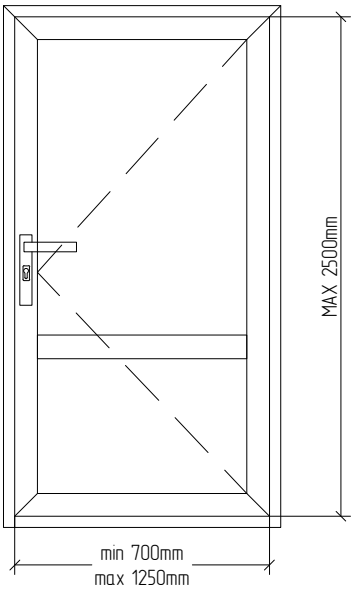

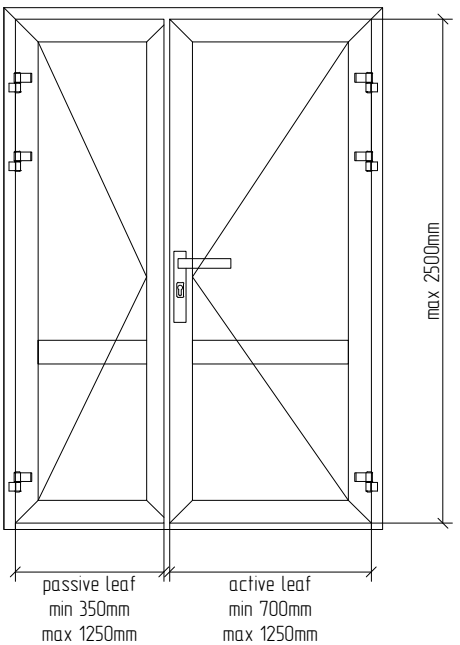

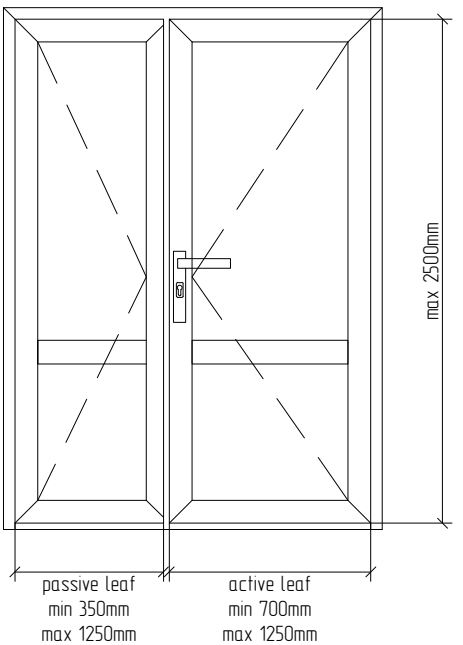

Quantity of 2AH67/2AH92 and 3AH67/3AH92 hinges depending on leaf weight and dimensions

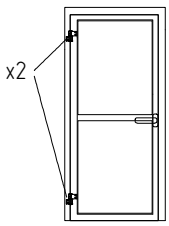

H \ L	700	800	900	1000	1100	1200	1250
2500	119	110	102	95	88	81	
2400	113	105	97	90	83	77	
2300	108	100	93	86	79	74	
2200	103	95	88	82	76	70	
2100	98	91	84	78	72	67	
2000	94	86	80	74	69	64	
1900							

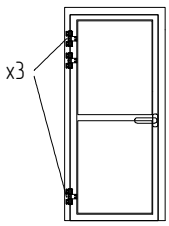

H \ L	700	800	900	1000	1100	1200	1250
2500	180	180	176	163	151	140	
2400	180	180	168	155	144	133	
2300	180	173	160	148	137	127	
2200	178	164	152	141	131	121	
2100	169	157	145	134	124	115	
2000	162	149	138	127	117	109	
1900							

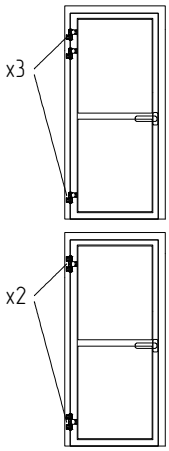

H \ L	700	800	900	1000	1100	1200	1250
2500	159	147	136	126	117	108	
2400	151	140	130	120	111	103	
2300	144	133	123	114	106	98	
2200	137	127	118	109	101	93	
2100	131	121	112	104	96	89	
2000	124	115	107	100	91	85	
1900							

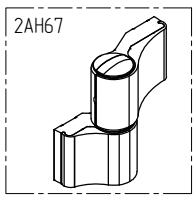

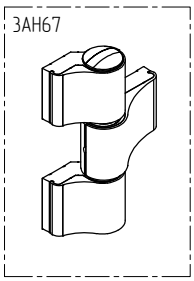

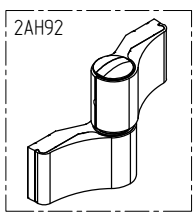

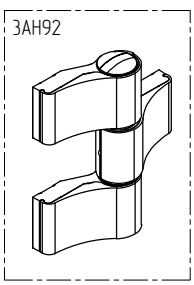

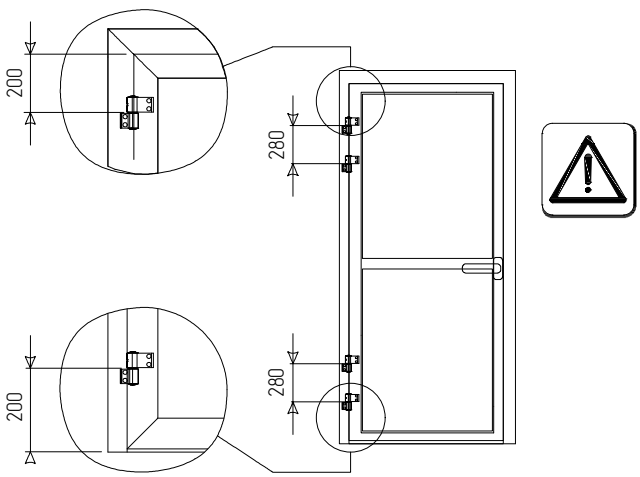

When the door's high is 2200mm and more
it is necessary to install one hinge in the middle

Quantity of 2AH67L hinges depending on leaf weight and dimensions

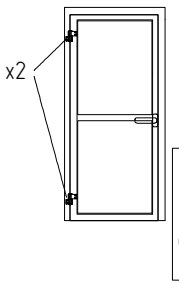

H \ L	700	800	900	1000	1100	1200	1250
2500	95	88	82	76	70	65	
2400	90	84	78	72	66	62	
2300	86	80	74	69	63	59	
2200	82	76	70	66	61	56	
2100	78	73	67	62	58	54	
2000	75	69	63	60	56	52	
1900							

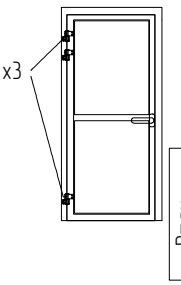

H \ L	700	800	900	1000	1100	1200	1250
2500	127	118	109	101	94	86	
2400	121	112	104	96	89	82	
2300	115	106	98	91	85	78	
2200	110	102	94	87	81	74	
2100	105	97	90	83	77	71	
2000	100	93	85	80	74	68	
1900							

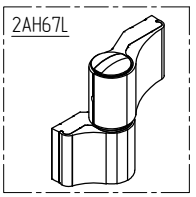

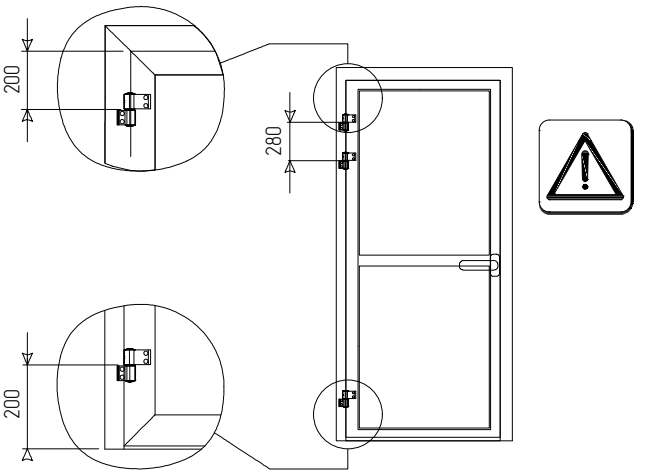

When the door's high is 2200mm and more,
it is necessary to install one hinge in the middle

Quantity of 2AH67L hinges depending on leaf weight and dimensions
outward opening

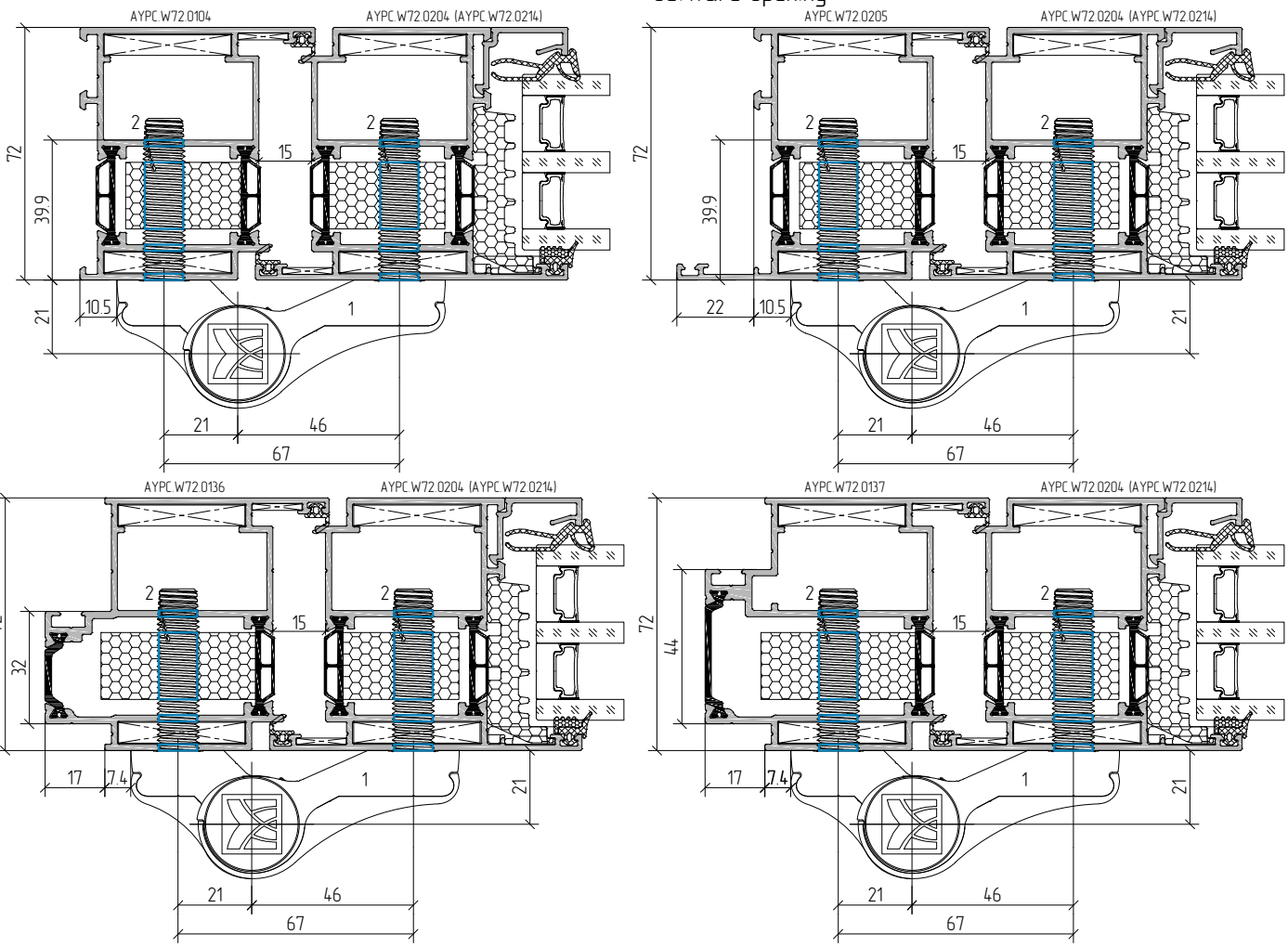

1 – Alutech 2AH67 (2AH67L) or 3AH67 face fixed hinge with axle distance of 67 mm
2 – Anchor wood screw L=58.5 mm from 2KAV or 3KAV kit

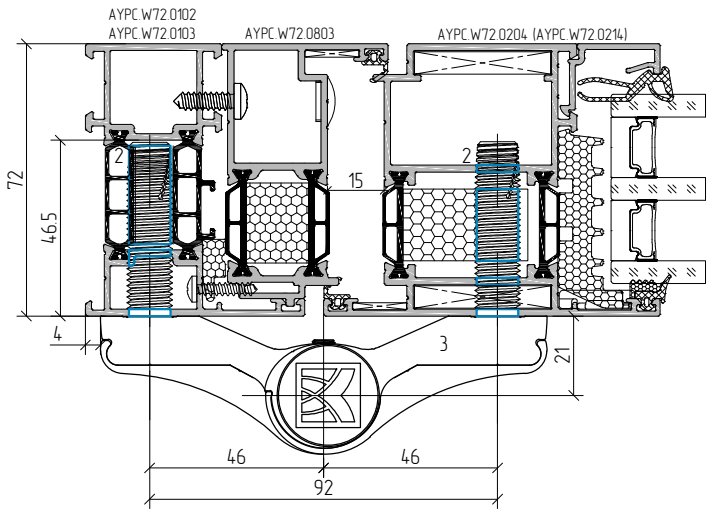

2 – Anchor wood screw L=58.5 mm from 2KAV or 3KAV kit
3 – Alutech 2AH92 or 3AH92 face fixed hinge with axle distance of 92 mm

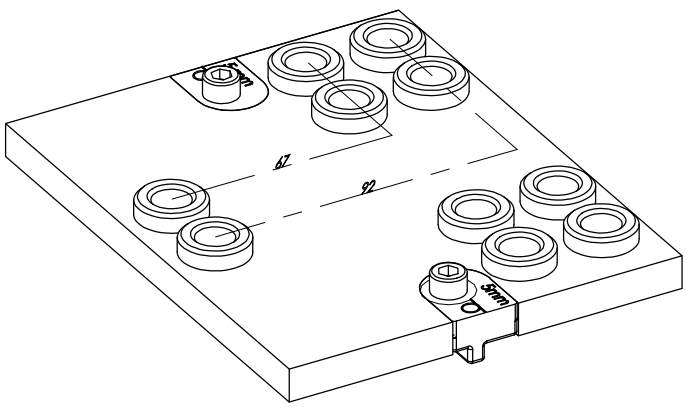

SHN1 jig for Alutech 2AH67, 2AH92
3AH67, 3AH92 hinges

Quantity of 2AH67L hinges depending on leaf weight and dimensions
inward opening

option 1

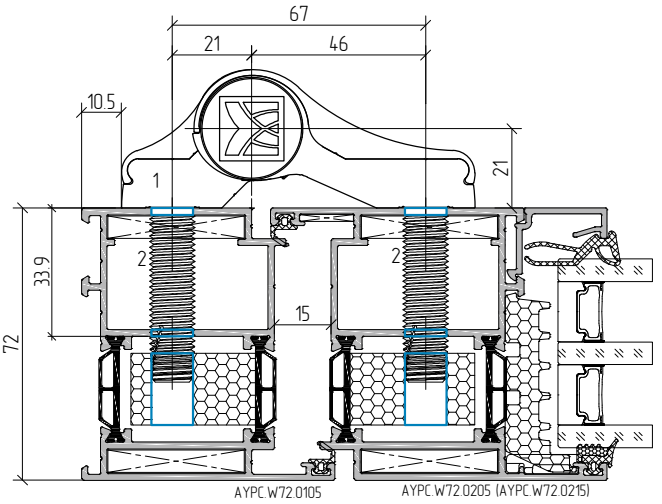

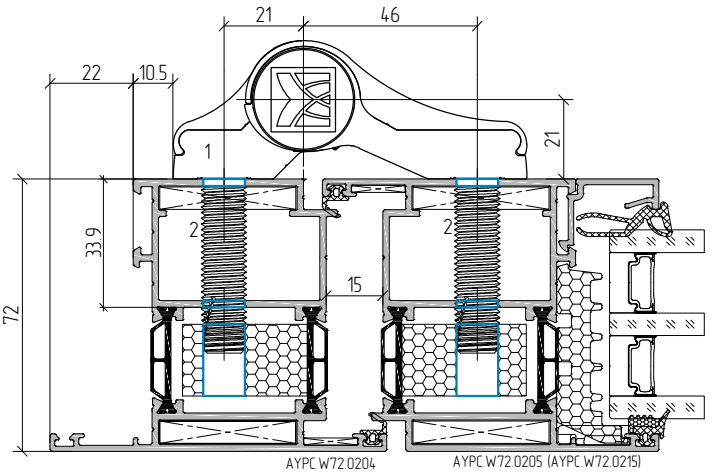

1 – Alutech 2AH67 (2AH67L) or 3AH67 face fixed hinge with axle distance of 67 mm
2 – Anchor wood screw L=58.5 mm from 2KAV or 3KAV kit

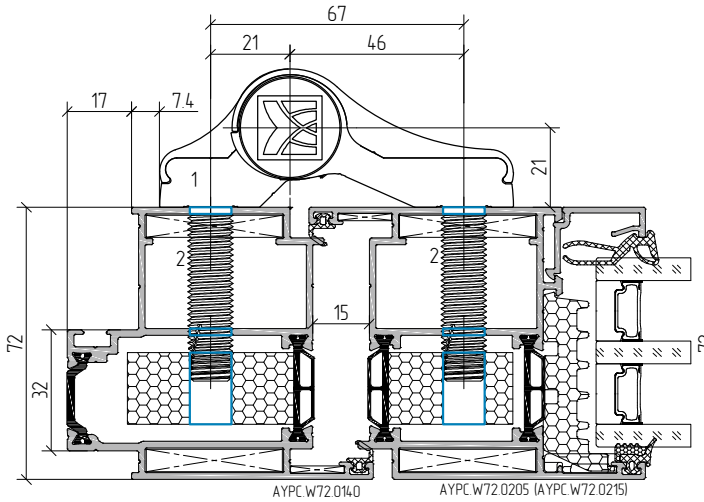

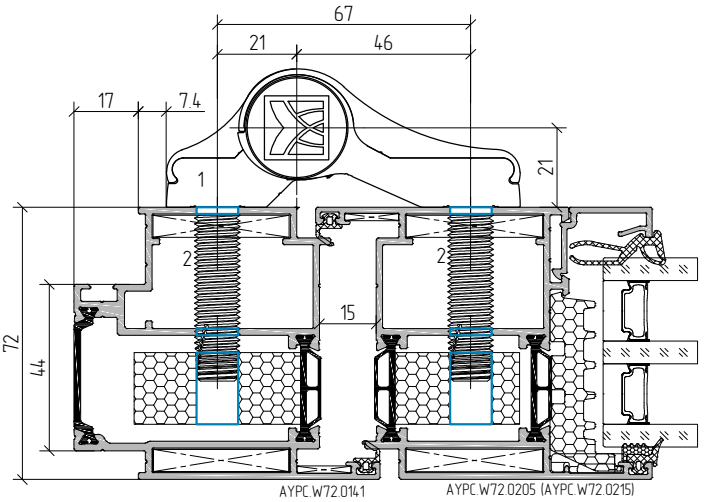

option 2

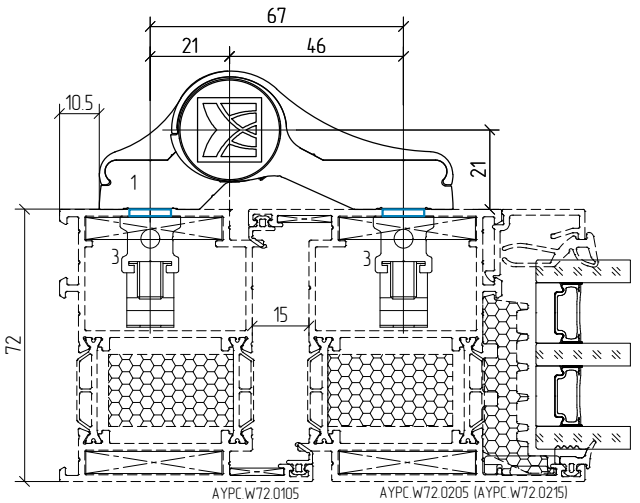

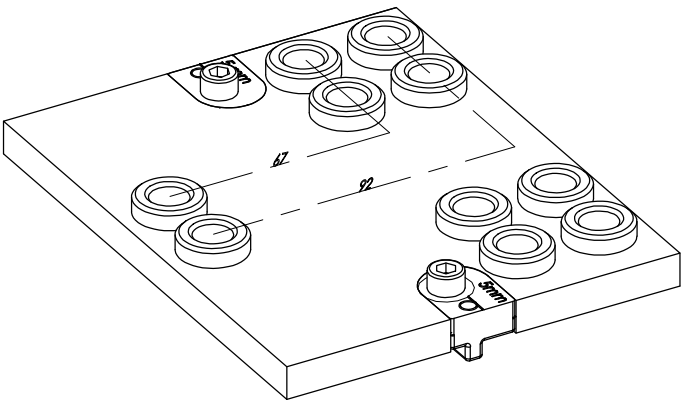

SHN1 jig for Alutech 2AH67, 2AH92
3AH67, 3AH92 hinges

1 – Alutech 2AH67 (2AH67L) or 3AH67 face fixed hinge with axle distance of 67 mm
3 – 2KK or 3KK fastening kit

ALUTECH

Application of ALUTECH 2AH67/2AH67L, 2AH92 and 3AH67/3AH92 face fixed hinges with different fastening kits

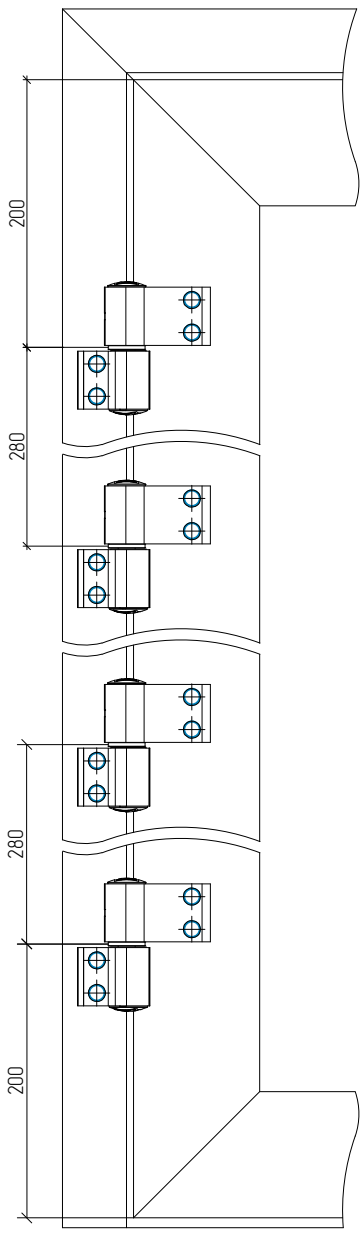

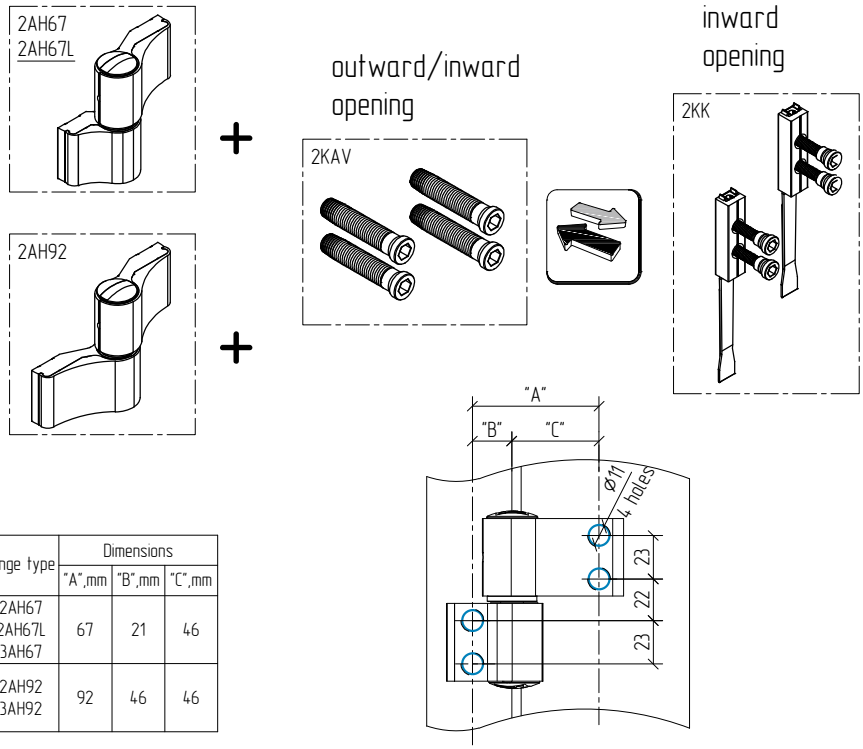

Hinge type	Dimensions		
	"A",mm	"B",mm	"C",mm
2AH67 2AH67L 3AH67	67	21	46
2AH92 3AH92	92	46	46

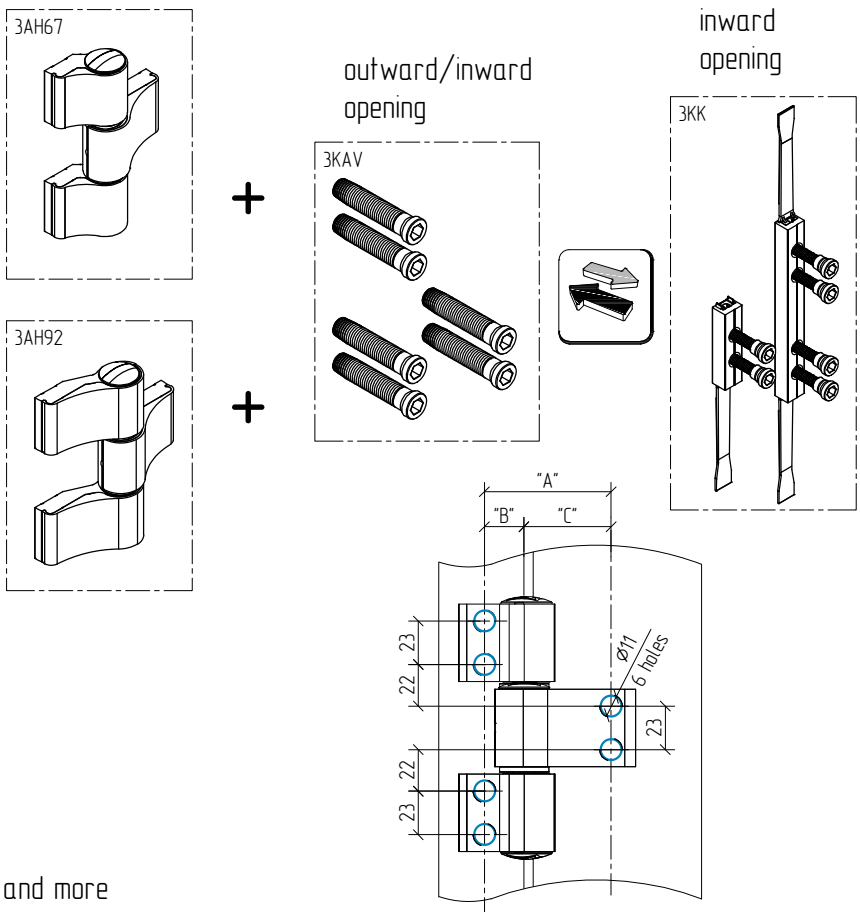

When the door's high is 2200mm and more
it is necessary to install one hinge in the middle

Quantity of RDRH "Dr. Hahn" barrel hinges depending on leaf weight and dimensions

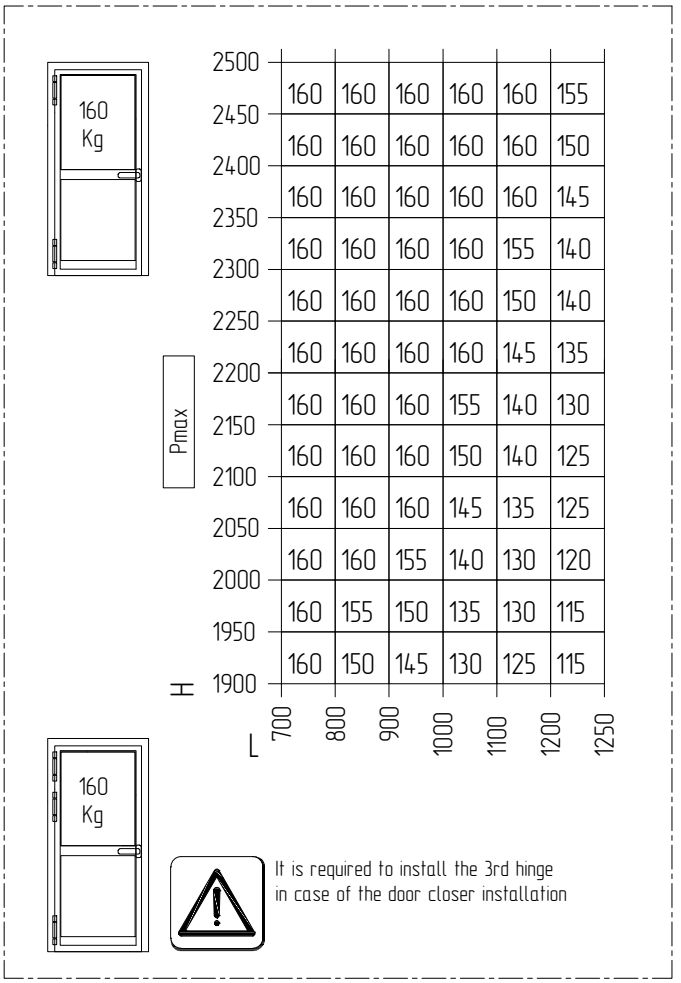

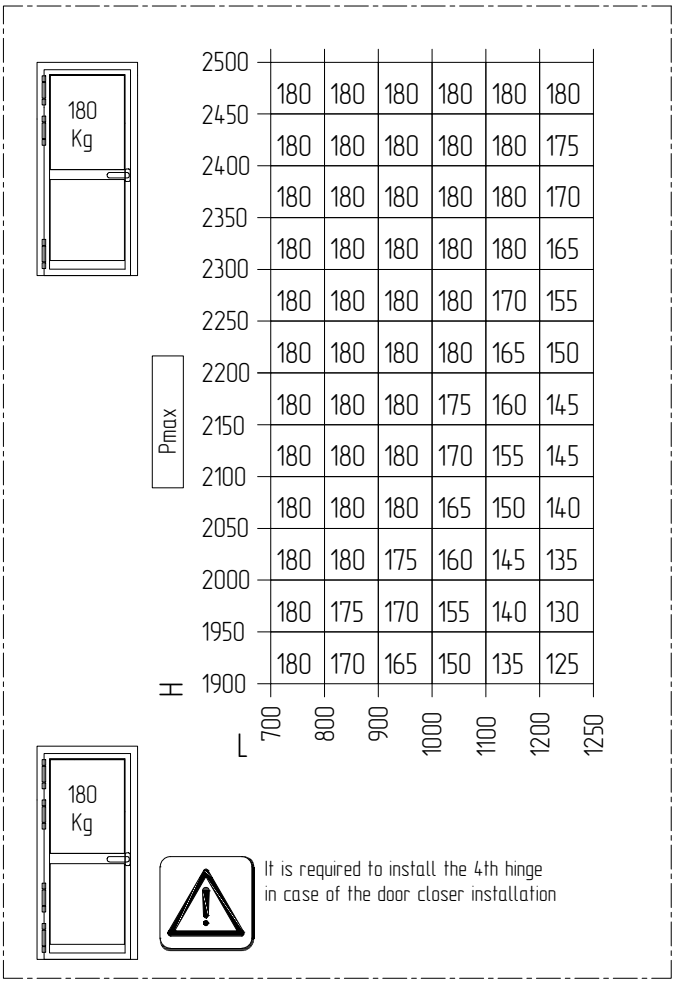

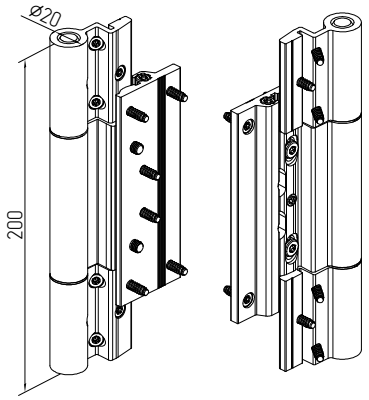

RDRH barrel hinge

Jig for barrel hinge

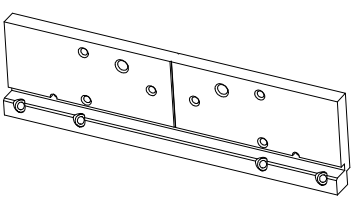

RDRH hinges

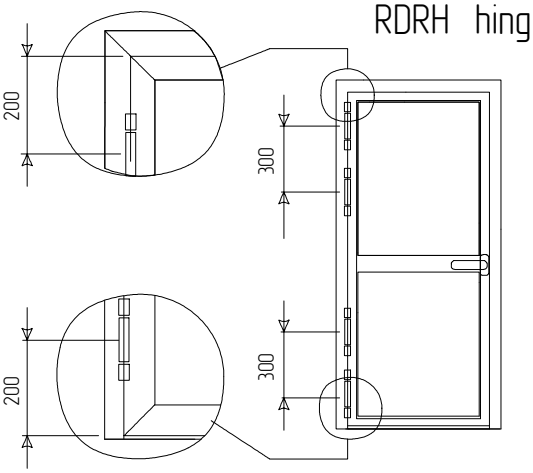

Scheme, sequence and possible options of installation as well as hinge adjustment are shown in mounting instructions

Dr.Hahn DESIGN·TECHNIK·SERVICE

ALUTECH PROFILE SYSTEMS

Installation of RDRH "Dr. Hahn" barrel hinges on the door leaf and frame profiles outward opening

AYPC.W72.0104 AYPC.W72.0204 (AYPC.W72.0214)

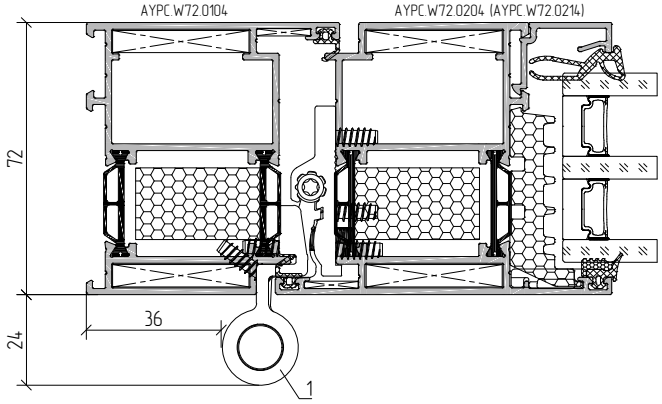

AYPC.W72.0205 AYPC.W72.0204 (AYPC.W72.0214)

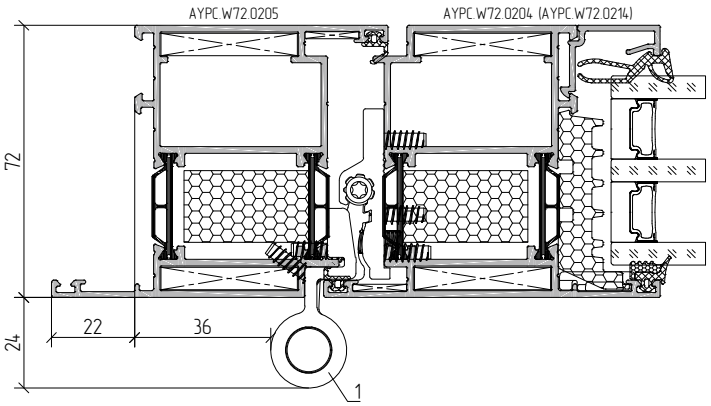

1 – RDRH "Dr. Hahn" barrel hinge with fastening kit

AYPC.W72.0136 AYPC.W72.0204 (AYPC.W72.0214)

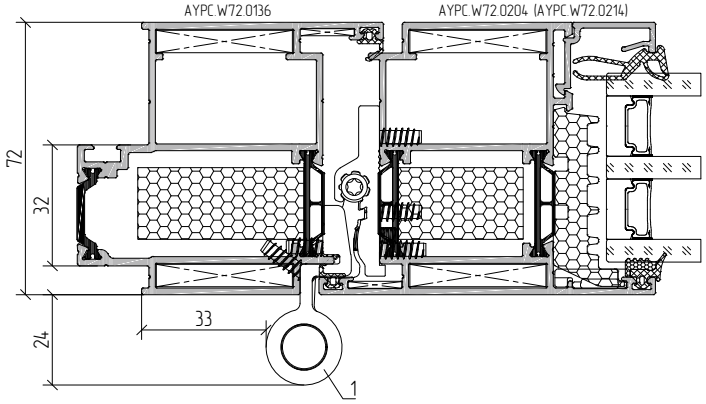

AYPC.W72.0137 AYPC.W72.0204 (AYPC.W72.0214)

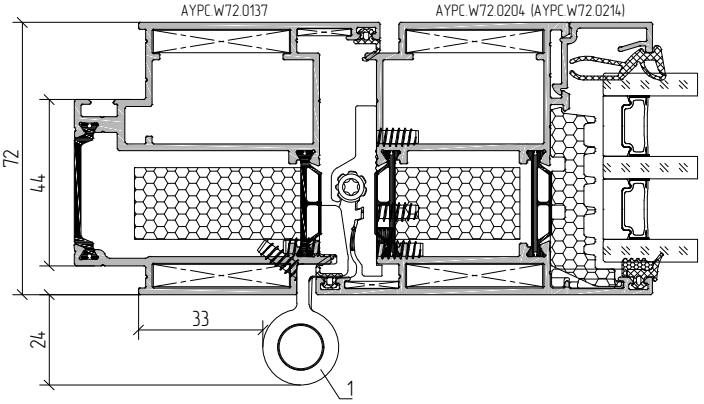

AYPC.W72.0138 AYPC.W72.0204 (AYPC.W72.0214)

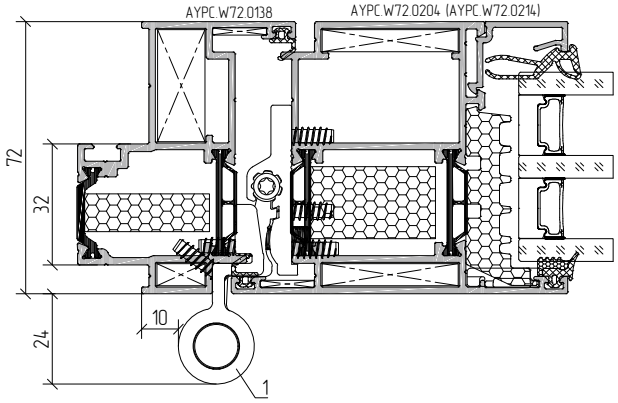

AYPC.W72.0139 AYPC.W72.0204 (AYPC.W72.0214)

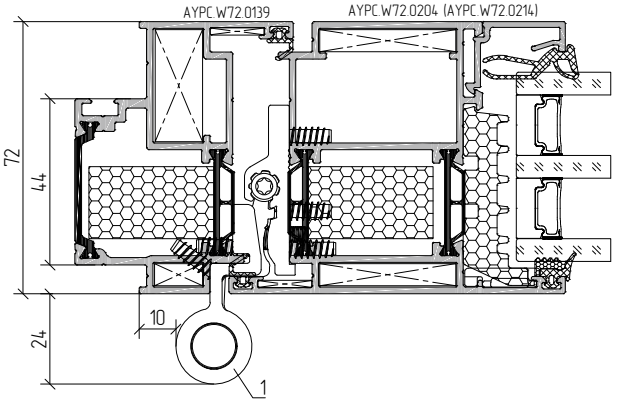

AYPC.W72.0101, AYPC.W72.0102,
AYPC.W72.0103, AYPC.W72.0107,
AYPC.W72.0301, AYPC.W72.0302,
AYPC.W72.0303, AYPC.W72.0304,
AYPC.W72.0305, AYPC.W72.0308 AYPC.W72.0803 AYPC.W72.0204 (AYPC.W72.0214)

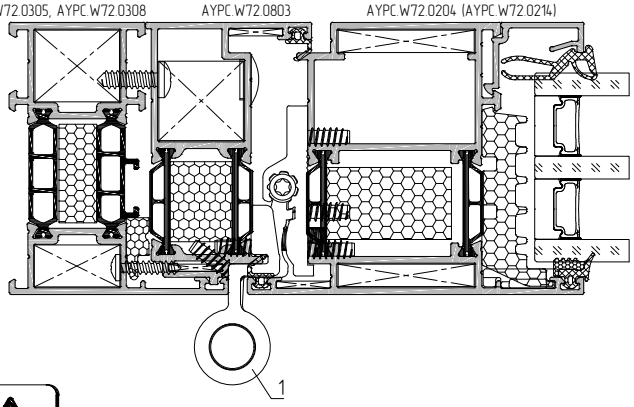

Cutting of FRK98 frame ledge profile gasket in the area of hinge installation is required

Scheme, sequence and possible options of installation as well as hinge adjustment are shown in mounting instructions

Dr.Hahn DESIGN·TECHNIK·SERVICE

Installation of RDRH "Dr. Hahn" barrel hinges on the door leaf and frame profiles

inward opening

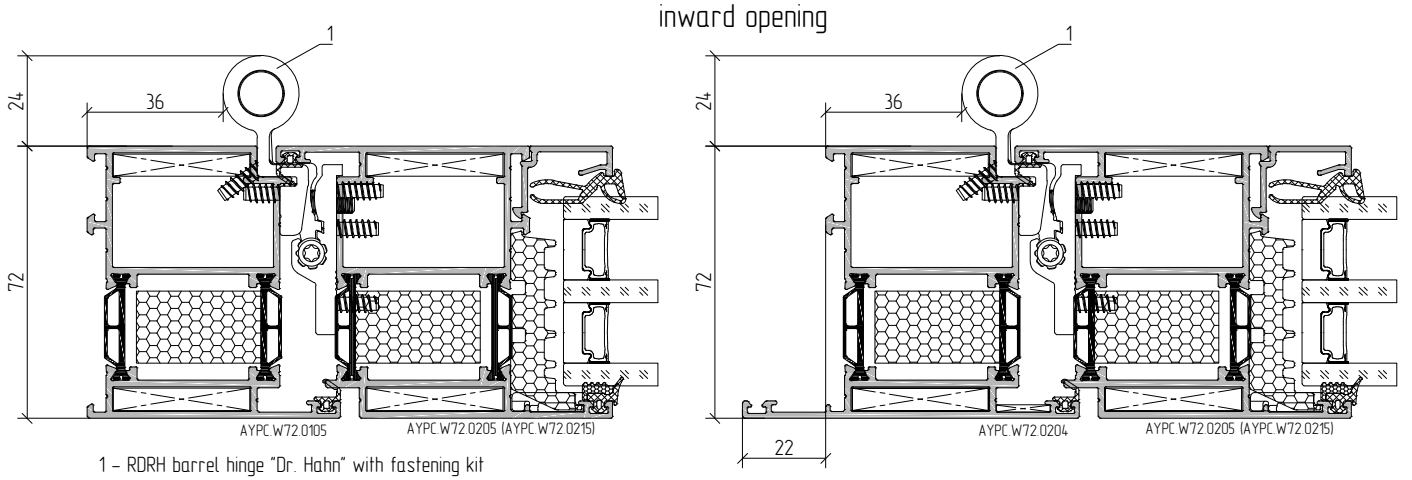

1 – RDRH barrel hinge "Dr. Hahn" with fastening kit

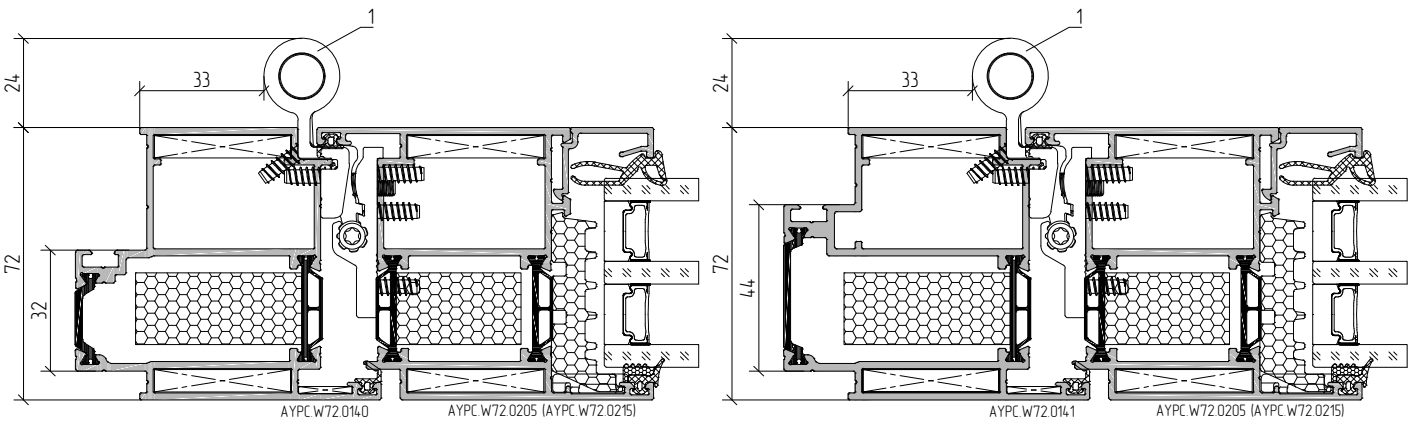

Jig installation of RDRH "Dr. Hahn" barrel hinges on the door leaf and frame profiles

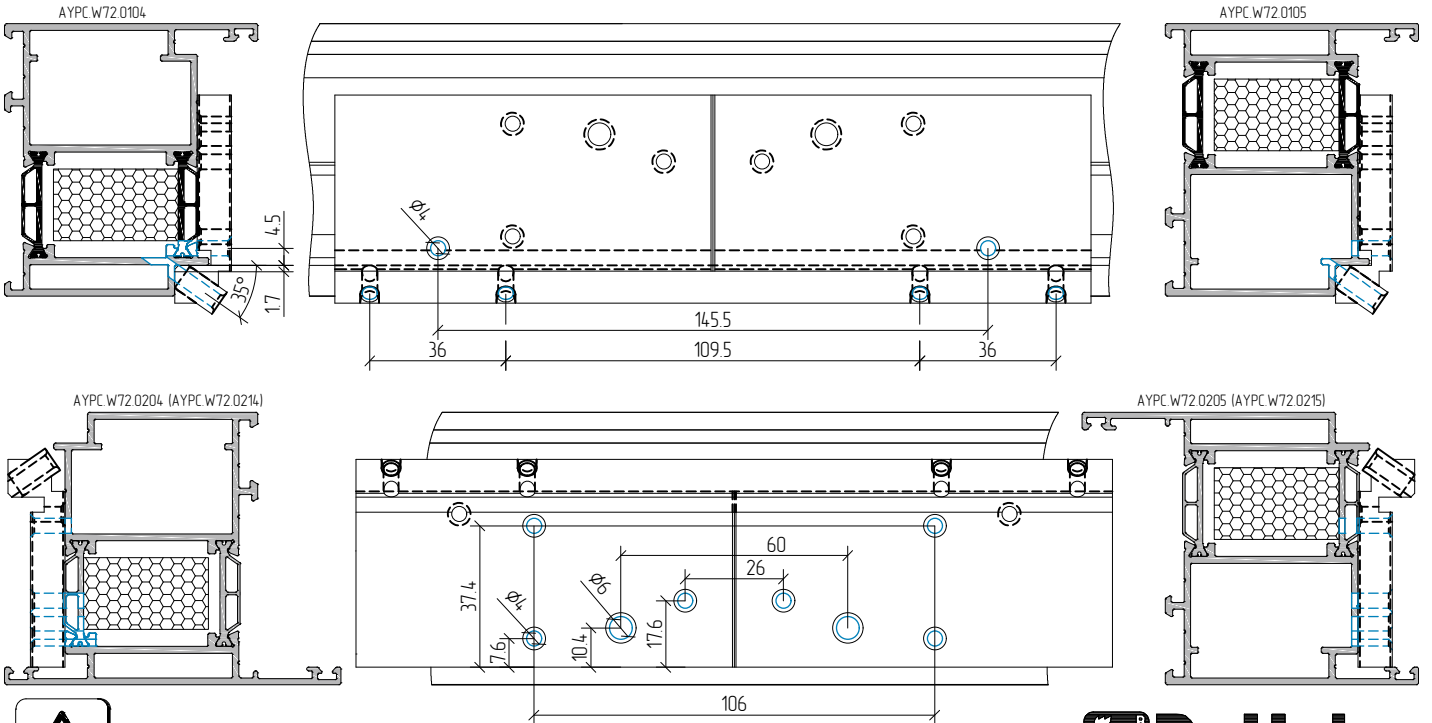

Scheme, sequence and possible options of installation as well as hinge adjustment are shown in mounting instructions

Dr.Hahn DESIGN·TECHNIK·SERVICE

Installation of Dr.Hahn V35110035 hinges on the door leaf and frame profiles

outward opening

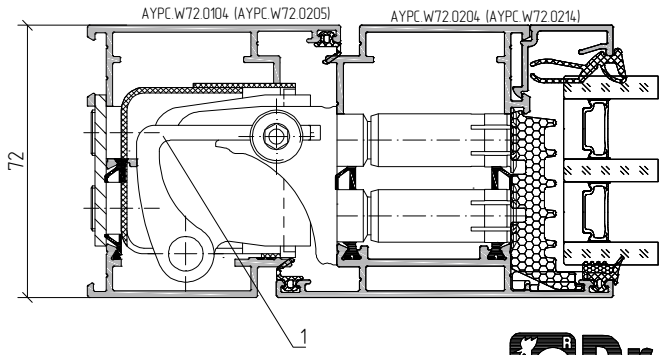

1 – Dr.Hahn V35110035 hinge

inward opening

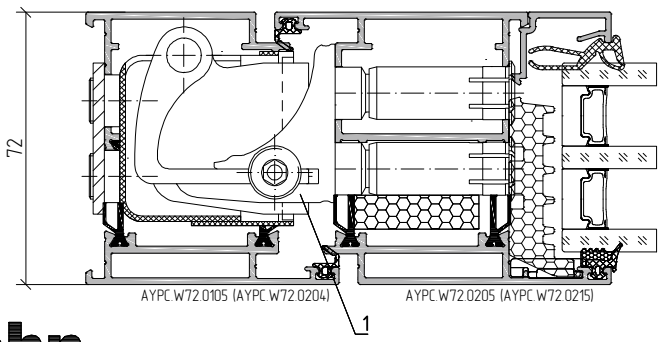

Dr.Hahn DESIGN·TECHNIK·SERVICE

outward opening

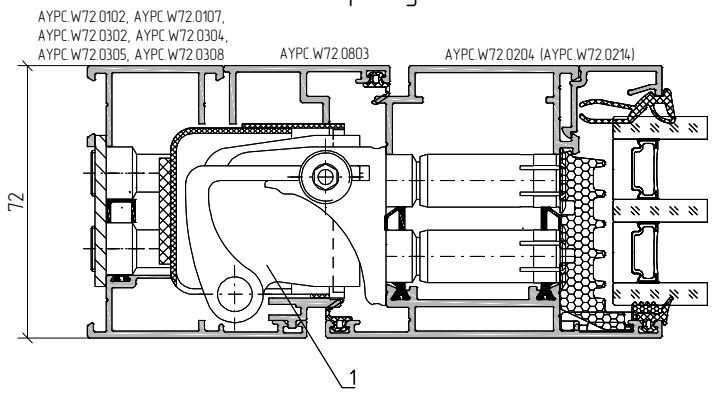

Floor stop installation is required.
Installation scheme is shown in mounting instruction

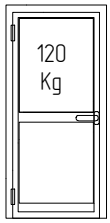

Pmax

H \ L	700	1000	1050	1100	1150	1200	1250
2500	120	120	120	120	120	120	
2450	120	120	120	120	120	120	
2400	120	120	120	120	120	120	
2350	120	120	120	120	120	120	
2300	120	120	120	120	120	120	
2250	120	120	120	120	120	115	
2200	120	120	120	120	120	115	
2150	120	120	120	120	115	110	
2100	120	120	120	115	110	105	
2050	120	120	120	110	105	105	
2000	120	120	110	105	100	100	
1950	120	110	105	100	95	95	
1900							

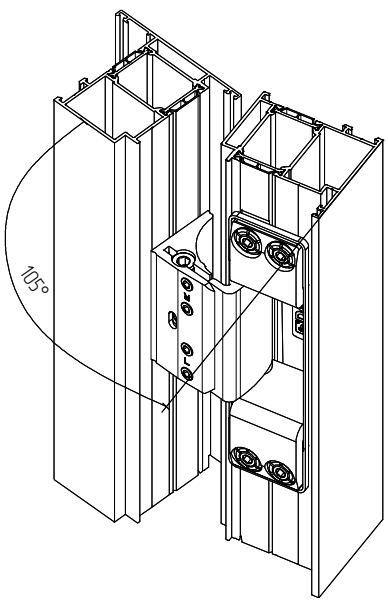

Dr.Hahn hinges

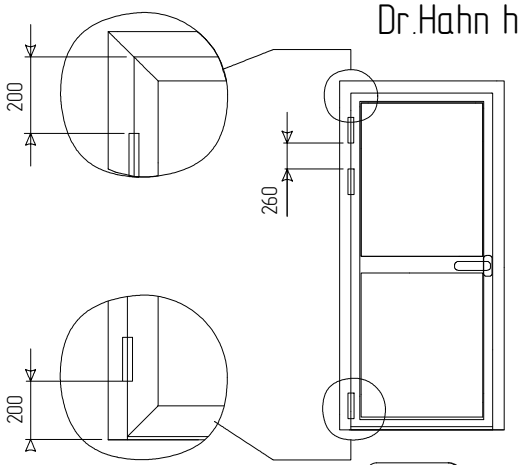

Scheme. sequence and possible options of installation as well as hinge adjustment are shown in mounting instructions.
It is recommended to process the profile using CNC machine

It is required to install the 3rd hinge in case of the door closer installation

Machining examples of frame and leaf profiles for Dr.Hahn V35110035 hinge installation

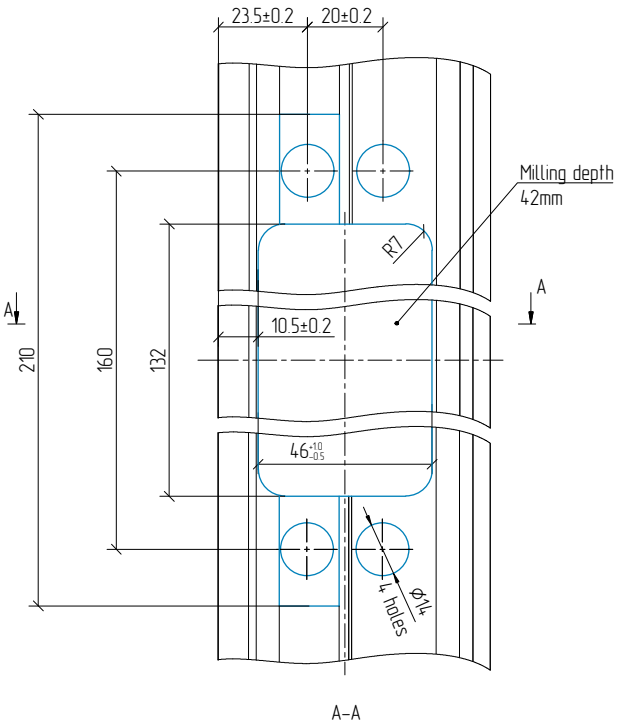

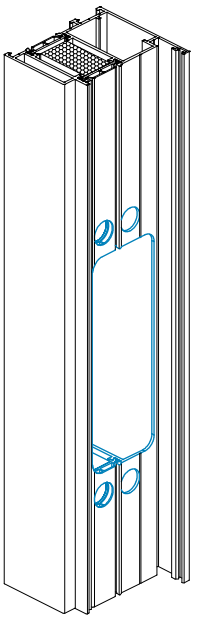

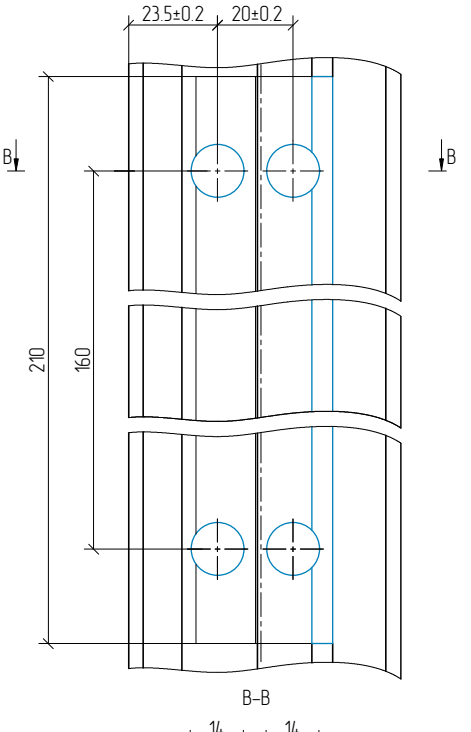

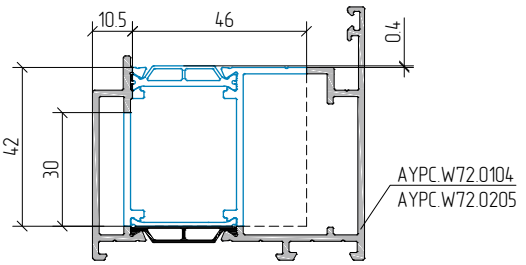

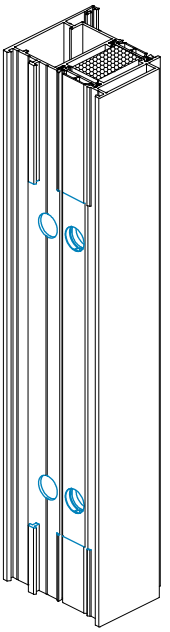

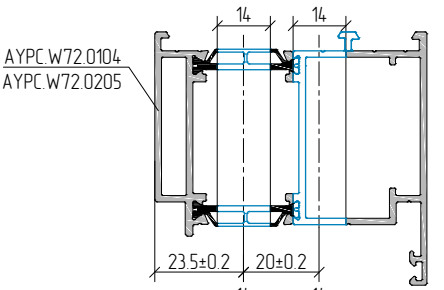

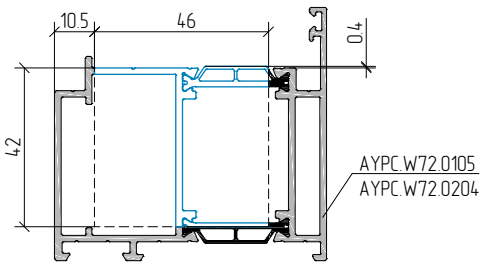

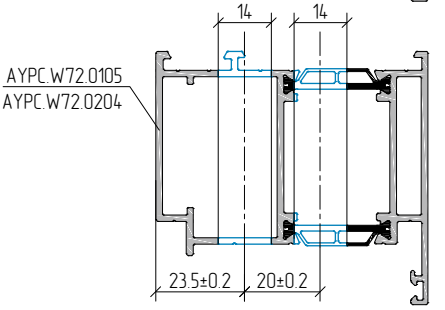

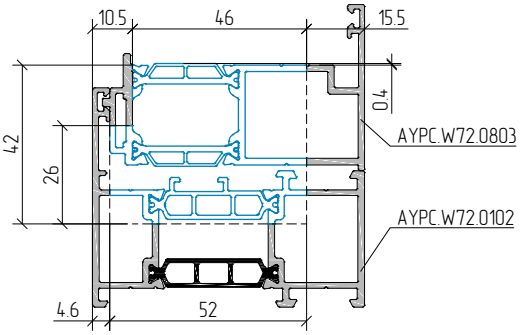

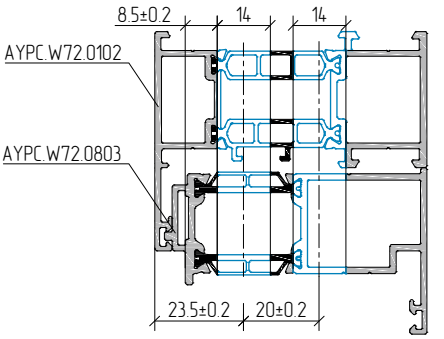

Scheme, sequence and possible options of installation as well as hinge adjustment are shown in mounting instructions.
It is recommended to process the profile using CNC machine

Dr.Hahn DESIGN·TECHNIK·SERVICE

ALUTECH PROFILE SYSTEMS

Example of leaf profile machining for Dr.Hahn V35110035 hinge installation

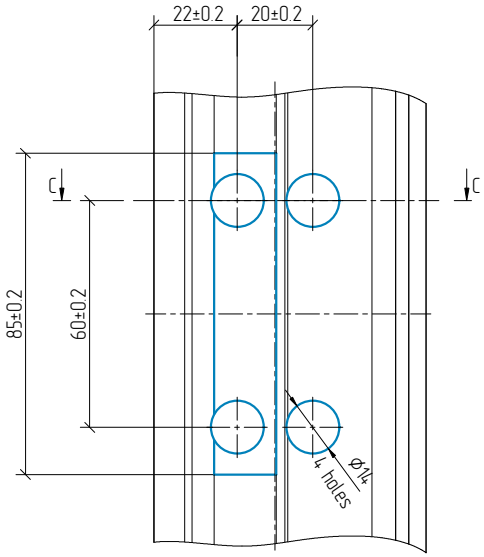

C–C

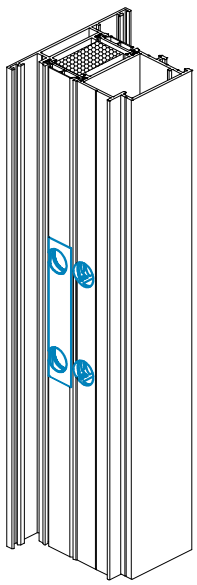

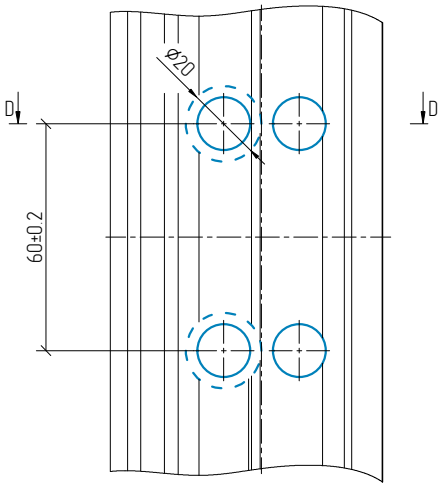

D–D

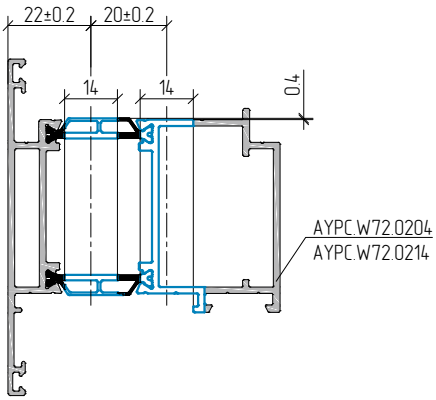

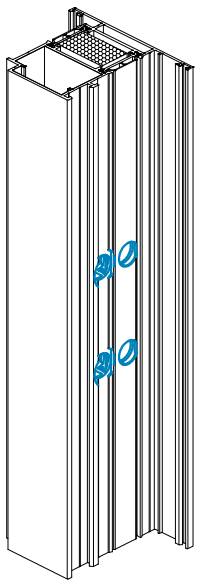

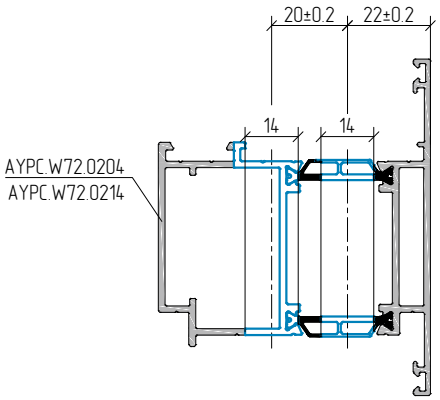

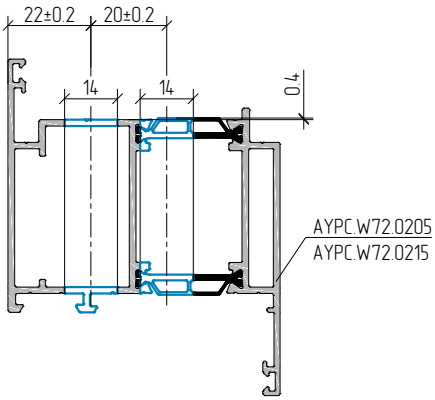

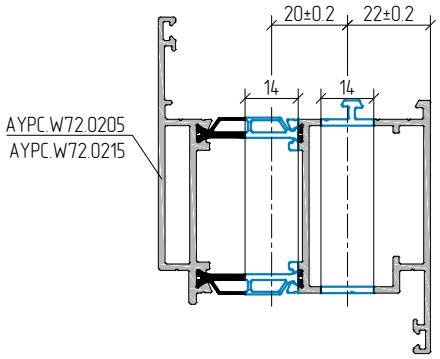

Scheme, sequence and possible options of installation as well as hinge adjustment are shown in mounting instructions.
It is recommended to process the profile using CNC machine

Dr.Hahn DESIGN·TECHNIK·SERVICE

Handle, cylinder and lock installation on the door leaf and frame profiles

outward opening

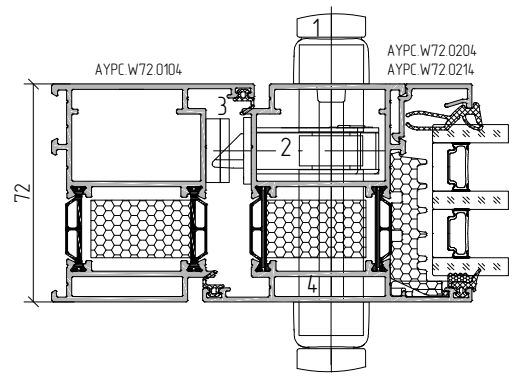

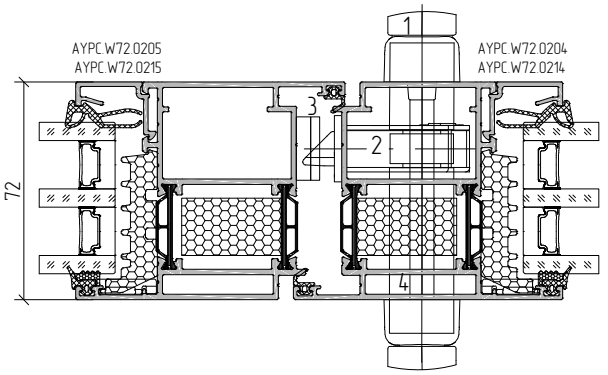

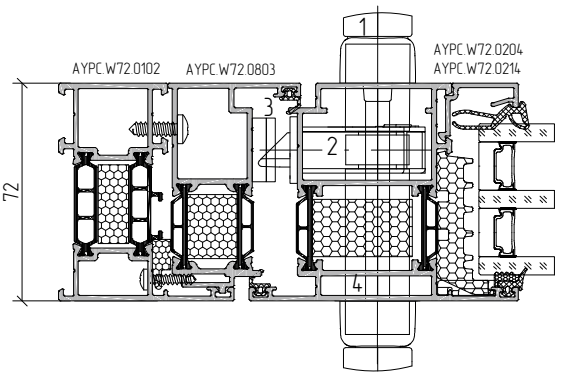

inward opening

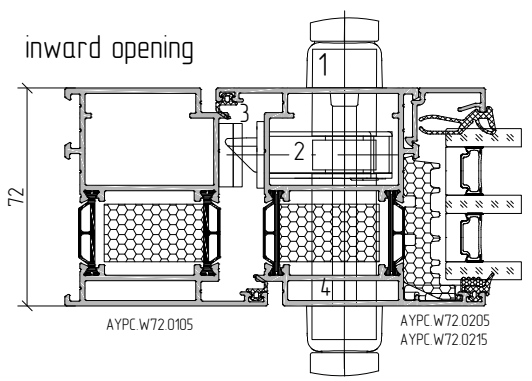

1 – 1022.00 handle
250/25/85/8

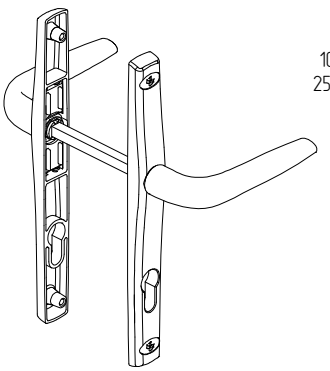

1022.01 handle
250/25/85/8

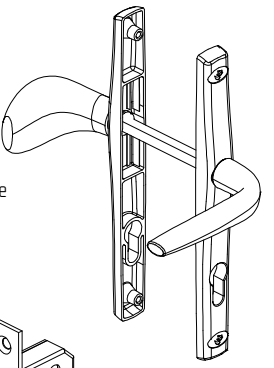

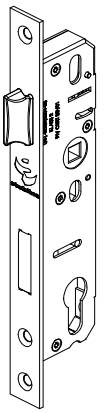

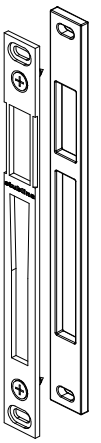

2 – 3021.00 lever lock
(30/22/85/8)

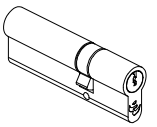

4 – 5072.00 35/61 cylinder
5057.00 31/61 cylinder

3 – 3016.10 strike plate
AYPC.C43.0913 support

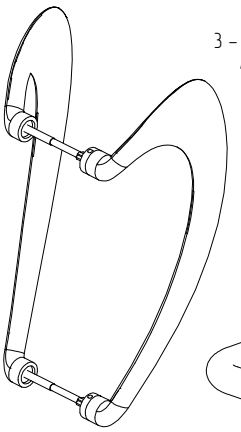

1020.00 handle

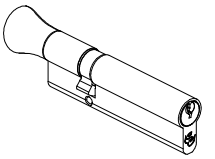

5605.00 31/61
thumb turn

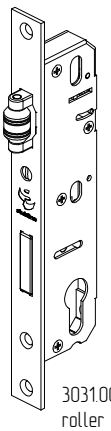

3031.00
roller lock

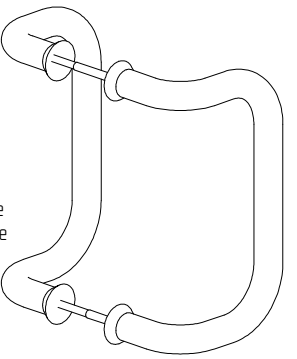

RD 100.300 pull handle
RD 400.300 pull handle

3060.00 door latch

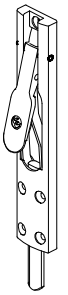

3062.00 door latch

3012.00
latch upper
strike plate

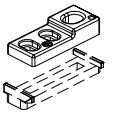

3009.00
latch bottom
strike plate

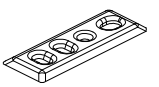

Application of Stublina 3021.00 / 3031.00 locks and Stublina 3149.30/P multipoint lever lock

For single leaf doors				
	Article	Name	Qty, pcs	Note
1900< Hleaf<2100	Leaf			
	3021.00 3031.00	Lever lock Roller lock	1	options
	Frame			
	3016.10	Strike plate	1	
	AYPC.C43.0913	Support	1	
	AYPC.W72.0976	Strike plate	1	
1900< Hleaf<2100	Leaf			
	3149.30/P	Multipoint lever lock	1	
	Frame			
	3045.60	Strike plate kit	1	
	AYPC.W72.0975	Strike plate	1	

For double leaf doors with latches				
	Article	Name	Qty, pcs	Note
1900< Hleaf<2100	Active leaf			
	3021.00 3031.00	Lever lock Roller lock	1	options
	Passive leaf			
	3016.10	Strike plate	1	
	AYPC.C43.0913	Support	1	
	AYPC.W72.0976	Strike plate	1	
	3060.00 3062.00	Door latch	2	options
	3012.00	Latch strike plate	1	upper
	3009.00	Latch strike plate	1	bottom
2040< Hleaf<2100	Active leaf			
	3149.30/P	Multipoint lever lock	1	
	Passive leaf			
	3045.60	Strike plate kit	1	
	AYPC.W72.0975	Strike plate	1	
	3062.00	Door latch	2	
	3012.00	Latch strike plate	1	upper
	3009.00	Latch strike plate	1	bottom

For double leaf doors with hidden latch				
	Article	Name	Qty, pcs	Note
1900< Hleaf<2100	Active leaf			
	3021.00 3031.00	Lever lock Roller lock	1	options
	Passive leaf			
	3016.10	Strike plate	1	
	AYPC.C43.0913	Support	1	
	AYPC.W72.0976	Strike plate	1	
	3008.00	Hidden latch	1	
	4020.28	Latch rod	2	L=2000 mm
	3012.00	Latch strike plate	1	upper
	3009.00	Latch strike plate	1	bottom
1900< Hleaf<2100	Active leaf			
	3149.30/P	Multipoint lever lock	1	
	Passive leaf			
	3045.60	Strike plate kit	1	
	AYPC.W72.0975	Strike plate	1	
	3008.00	Hidden latch	1	
	4020.28	Latch rod	2	L=2000 mm
	3012.00	Latch strike plate	1	upper
	3009.00	Latch strike plate	1	bottom

Leaf profile machining for 3021.00 (30/22/85/8) lever lock installation

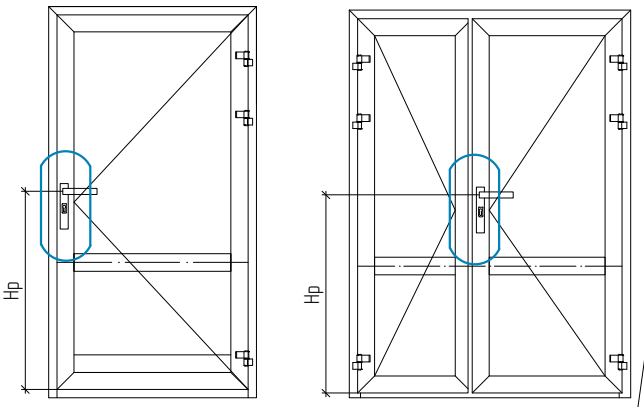

Hp – distance from the bottom part of the leaf to the handle axle

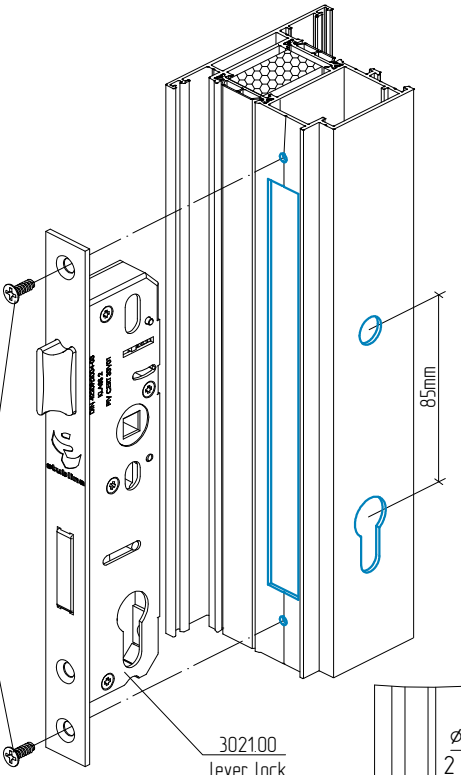

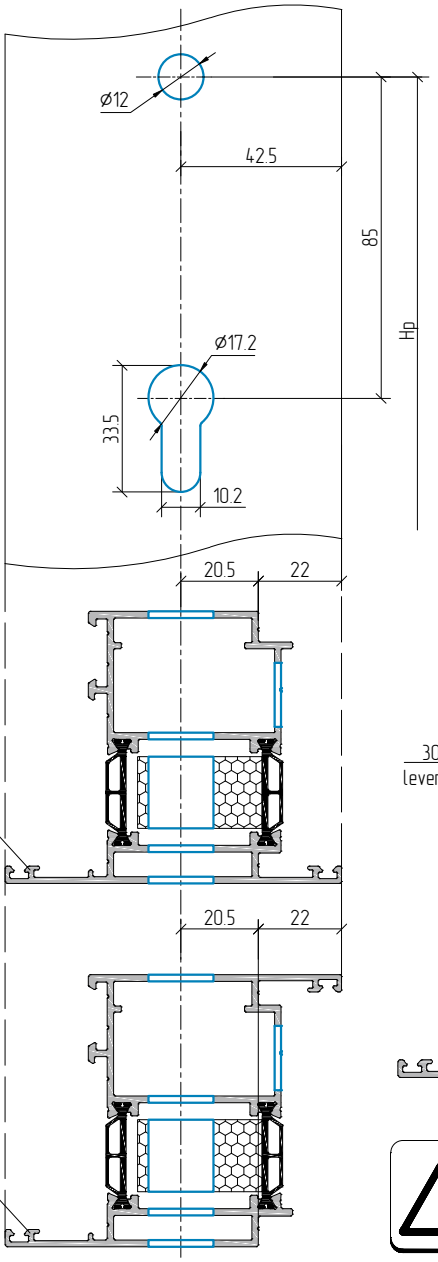

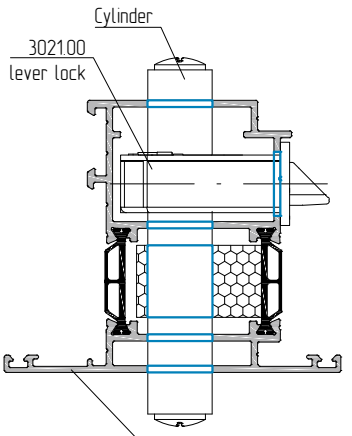

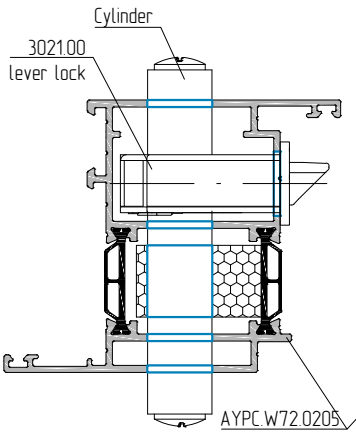

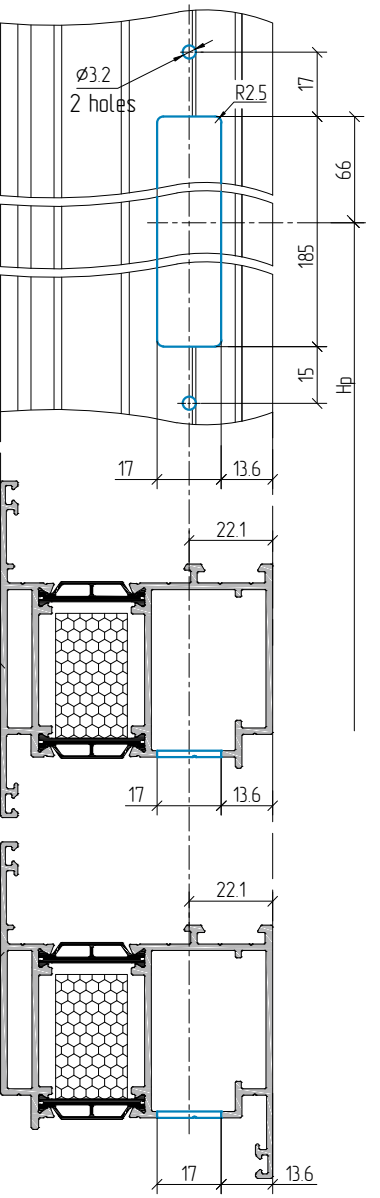

Self-tapping screw 3.9x16-A2 DIN7982 are not included into the delivery set.

Profile machining for 3016.10 strike plate installation

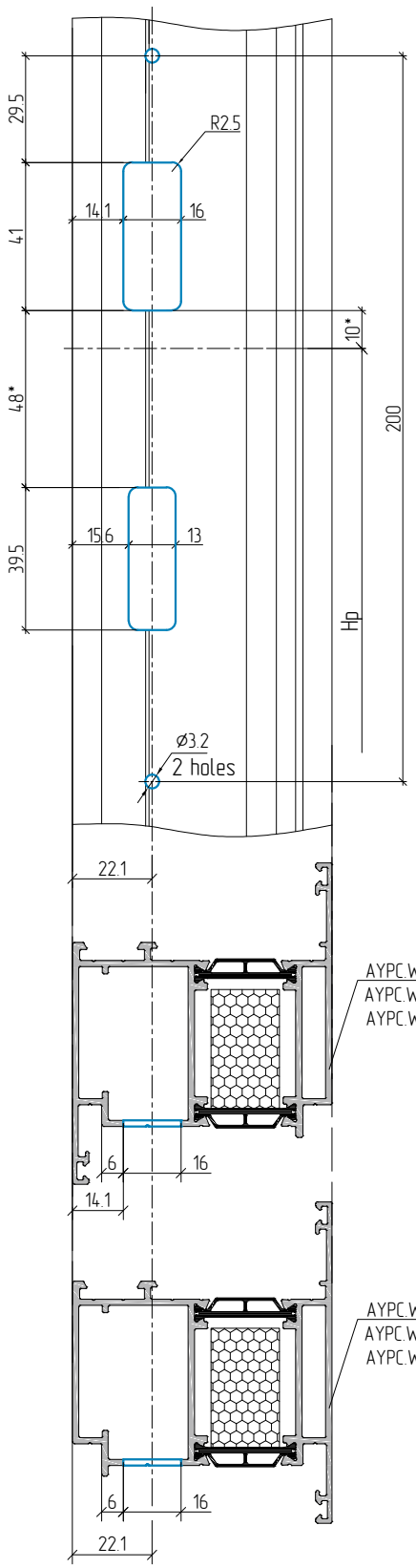

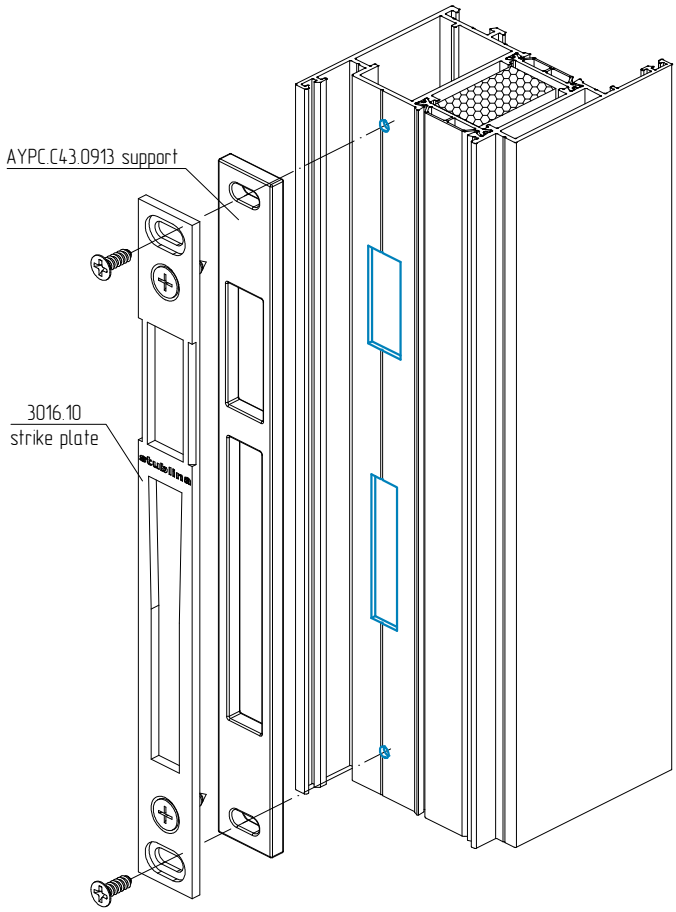

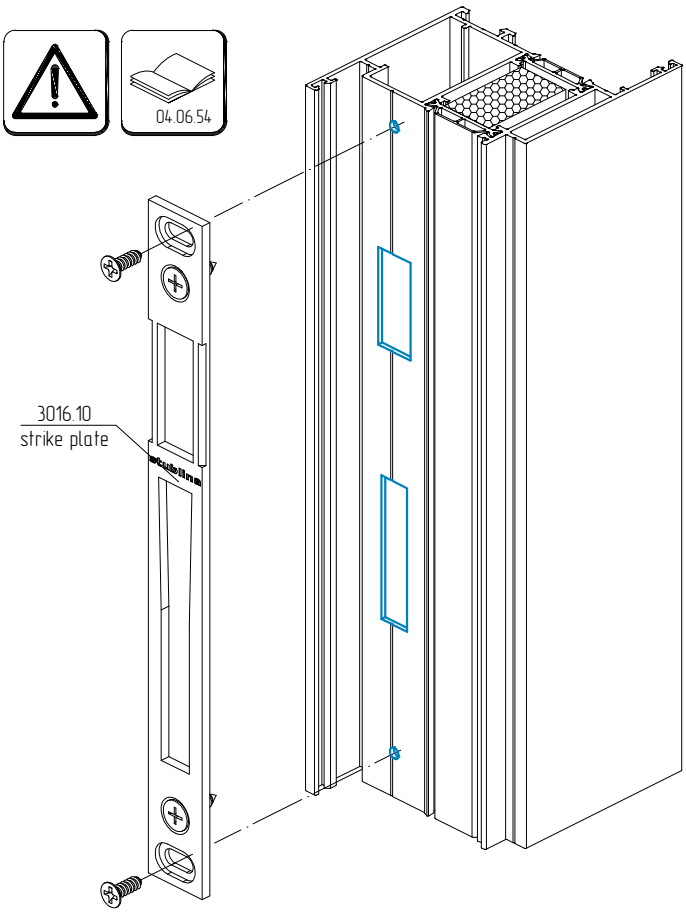

Profile machining for 1022.00 and 1022.01 handles installation

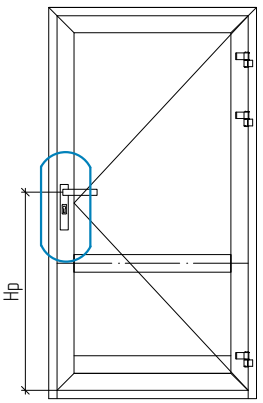

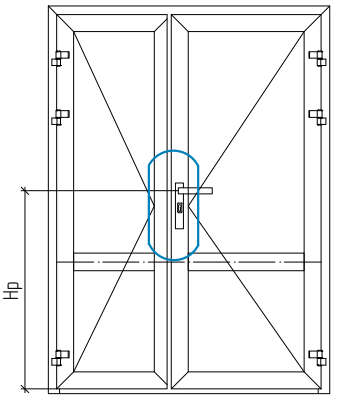

Hp – distance from the bottom part of the leaf to the handle axle

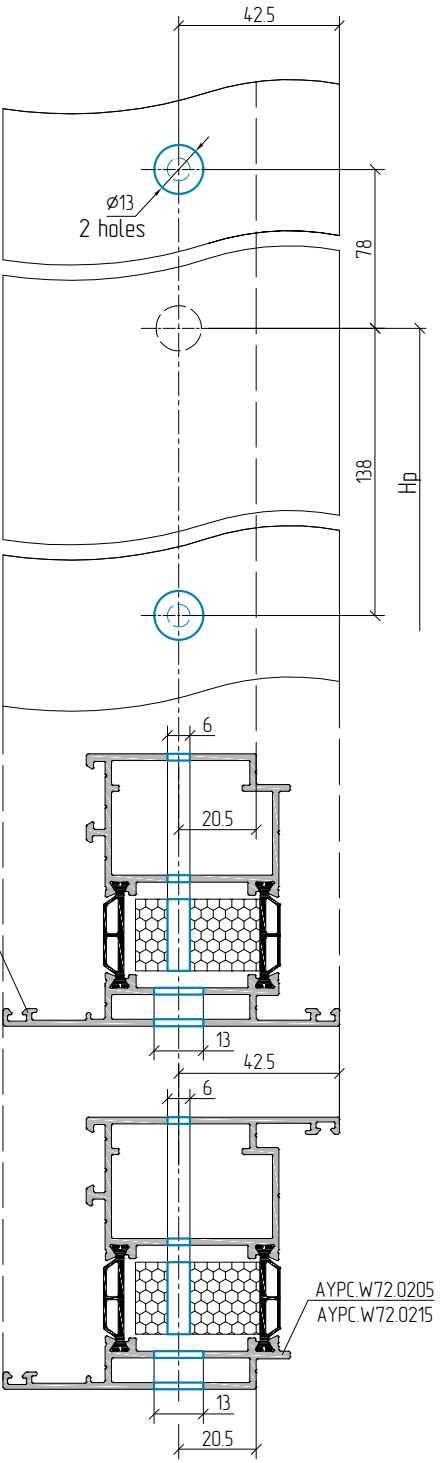

1022.00 handle

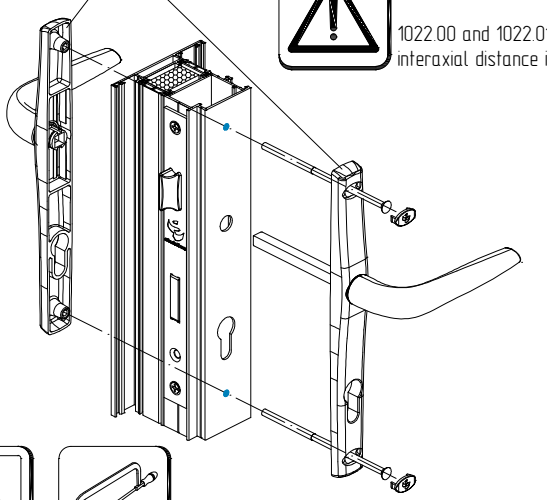

1022.00 and 1022.01 handle interaxial distance is 85 mm

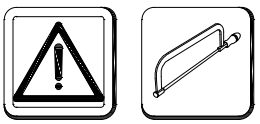

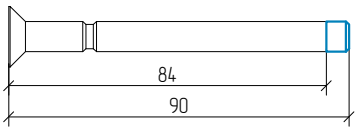

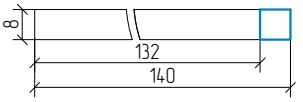

It is necessary to shorten handle fixing screws down to 84 mm before assembling. It is necessary to shorten the pin down to 132 mm before installation

1022.01 handle

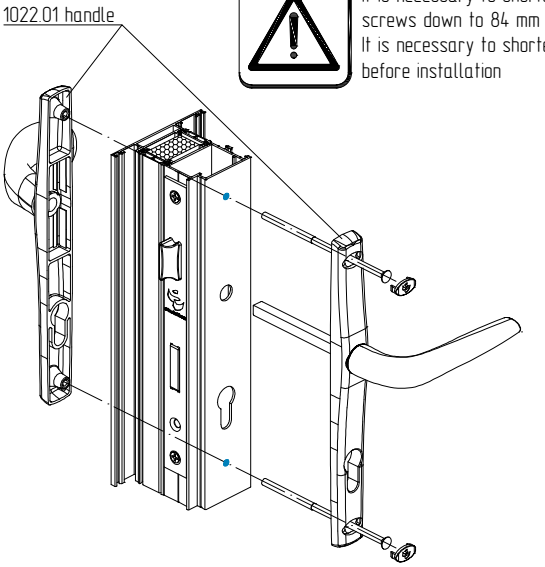

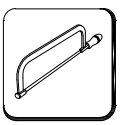

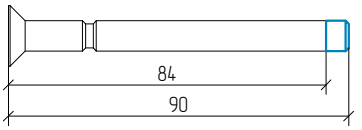

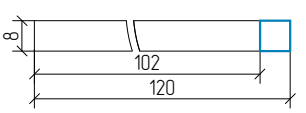

It is necessary to shorten handle fixing screws down to 84 mm before assembling . It is necessary to shorten the pin down to 102 mm before installaton

Profile machining for 1031.02 / 1031.04 (rust-resistant) cylinder cover plate.

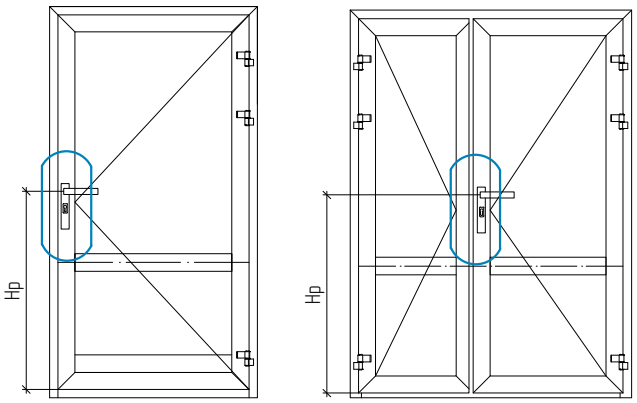

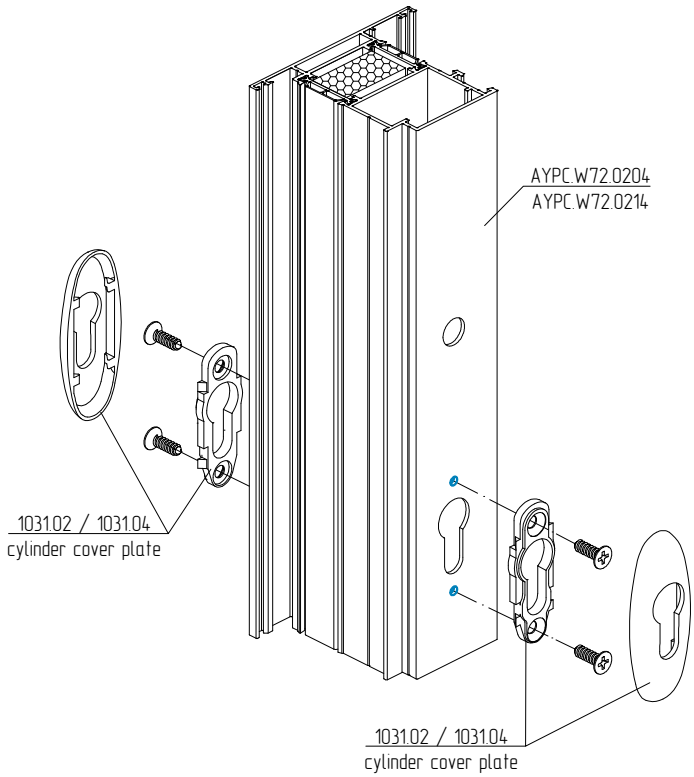

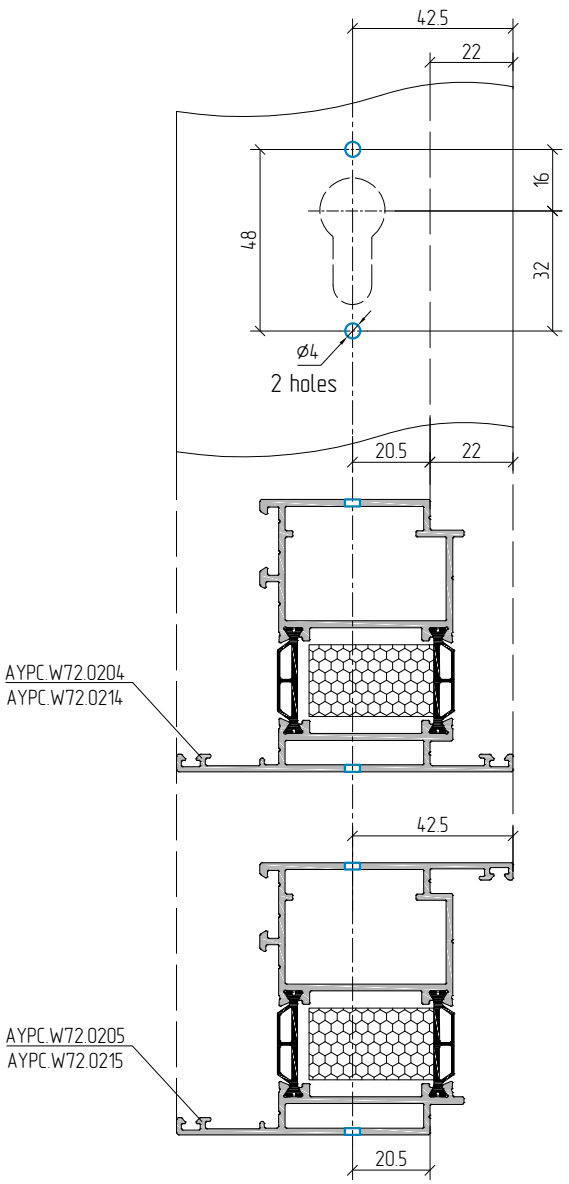

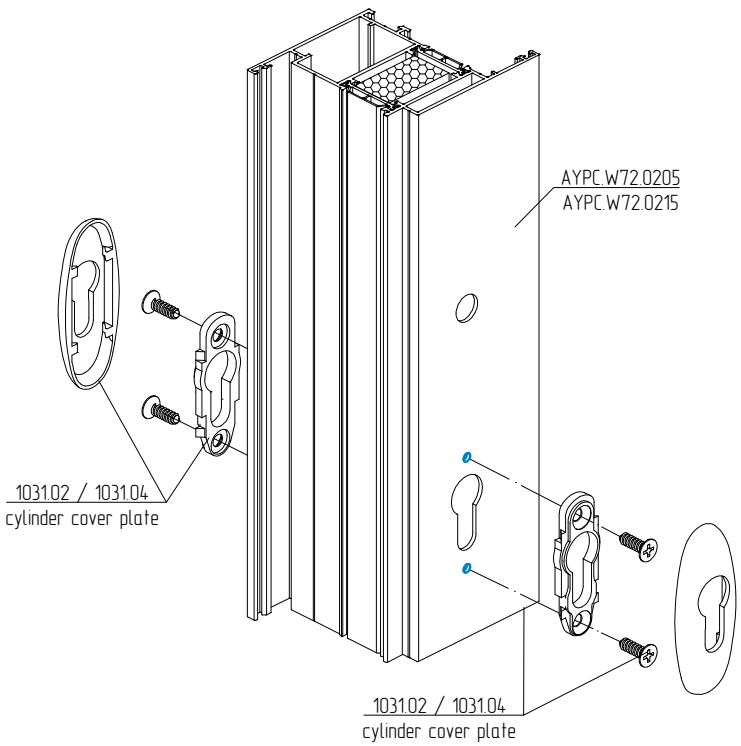

Profile machining for 1032.00 / 1023.00 (rust-resistant) and 1132.00 door handle

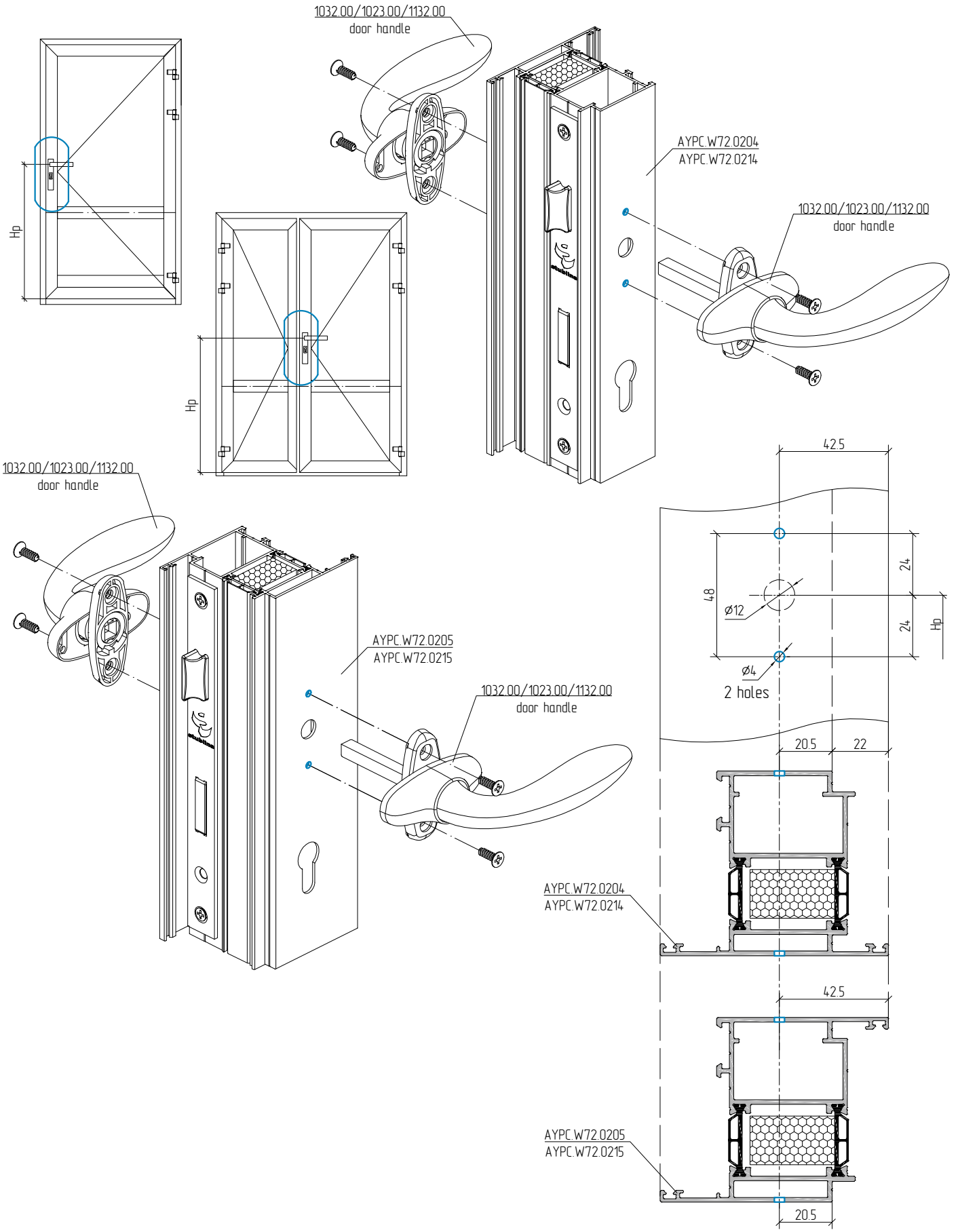

Installation of 3149.30/P (24/85/8) multipoint lever lock and 3045.60 strike plate kit on leaf / frame profiles

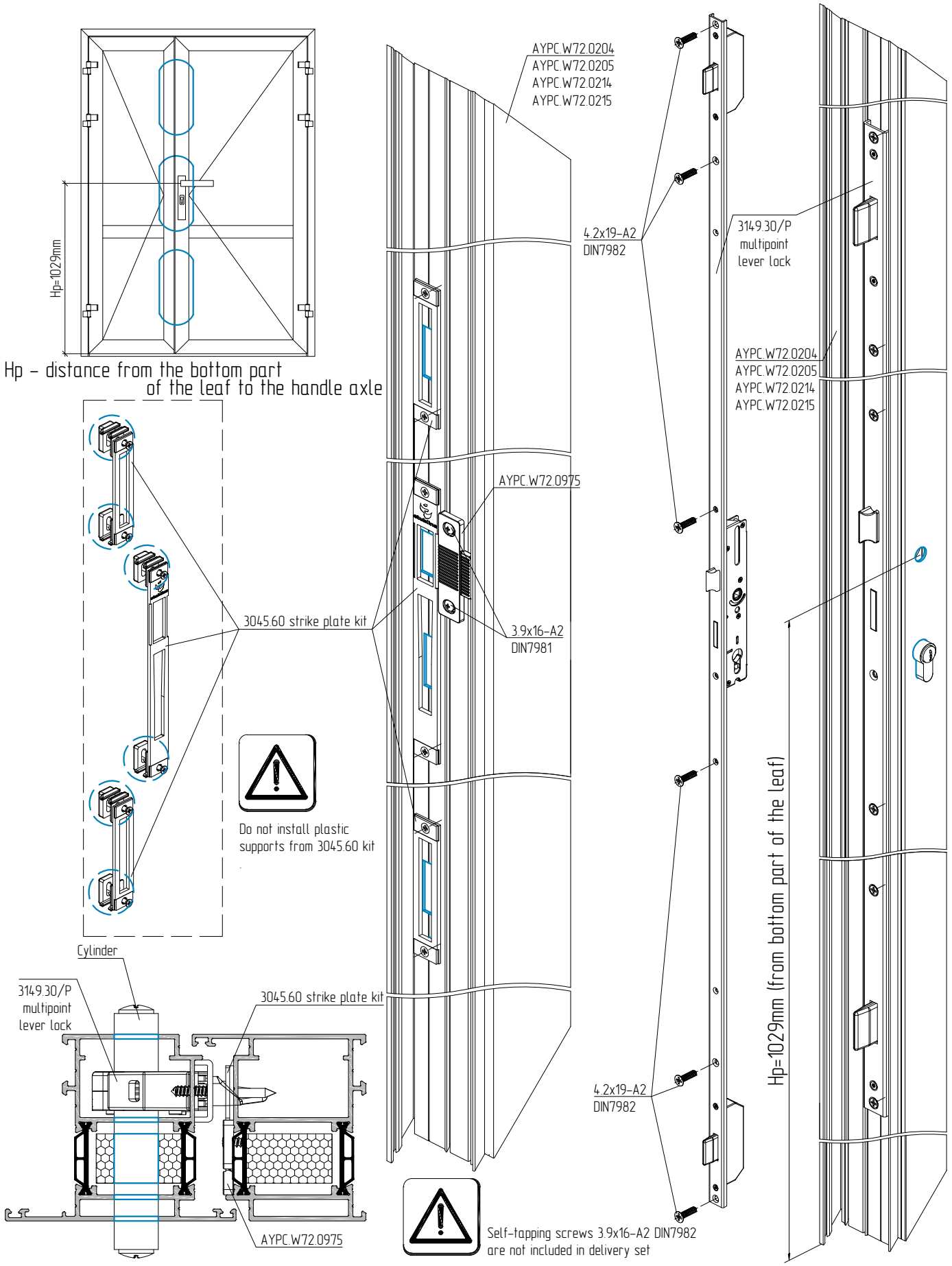

Leaf profile machining for 3149.30/P (24/85/8) multipoint lever lock installation

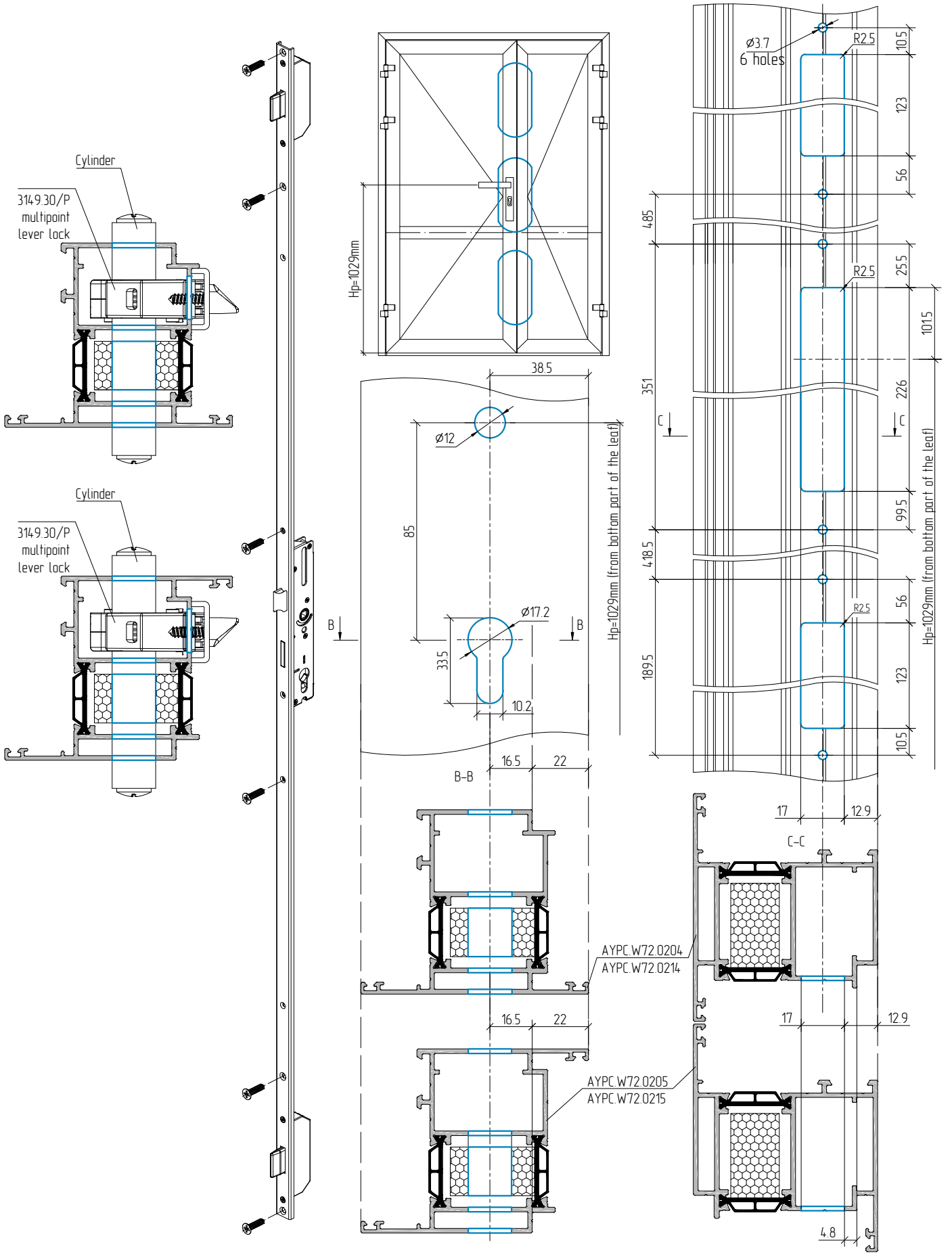

Frame and leaf profile machining for 3045.60 strike plate kit and 3149.30/P (24/85/8) multipoint lever lock installation

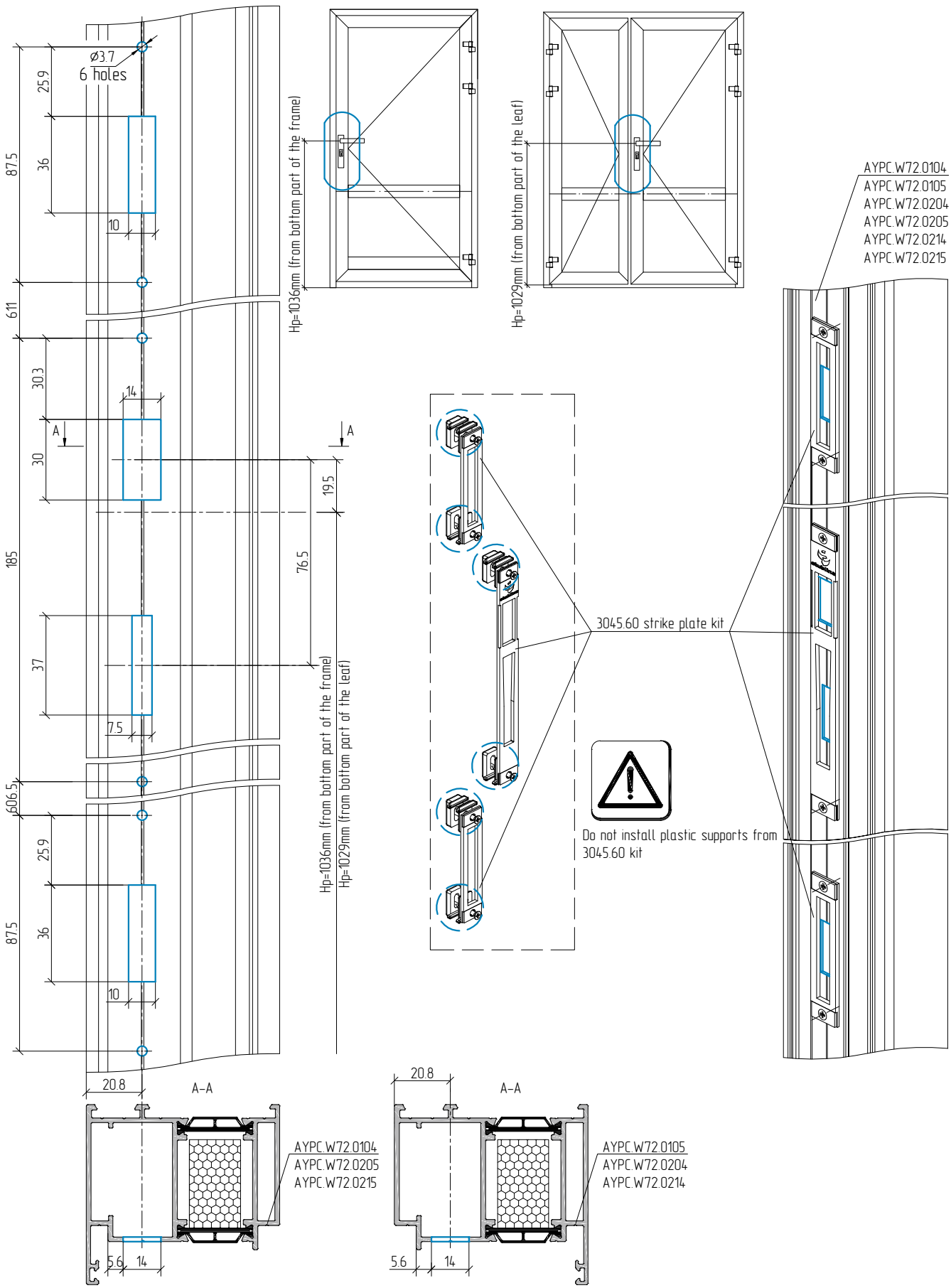

Installation example of AYPC.W72.0975 and AYPC.W72.0976 strike plates with Stublina 3021.00/3031.00 and 3149.30/P locks for outward opening doors

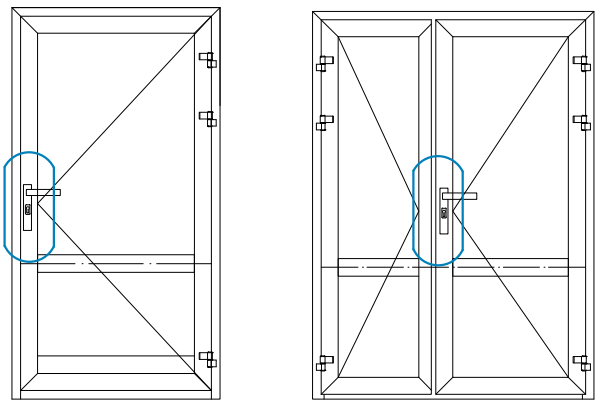

Installation of AYPC.W72.0975 strike plate for Stublina 3149.30/P lock

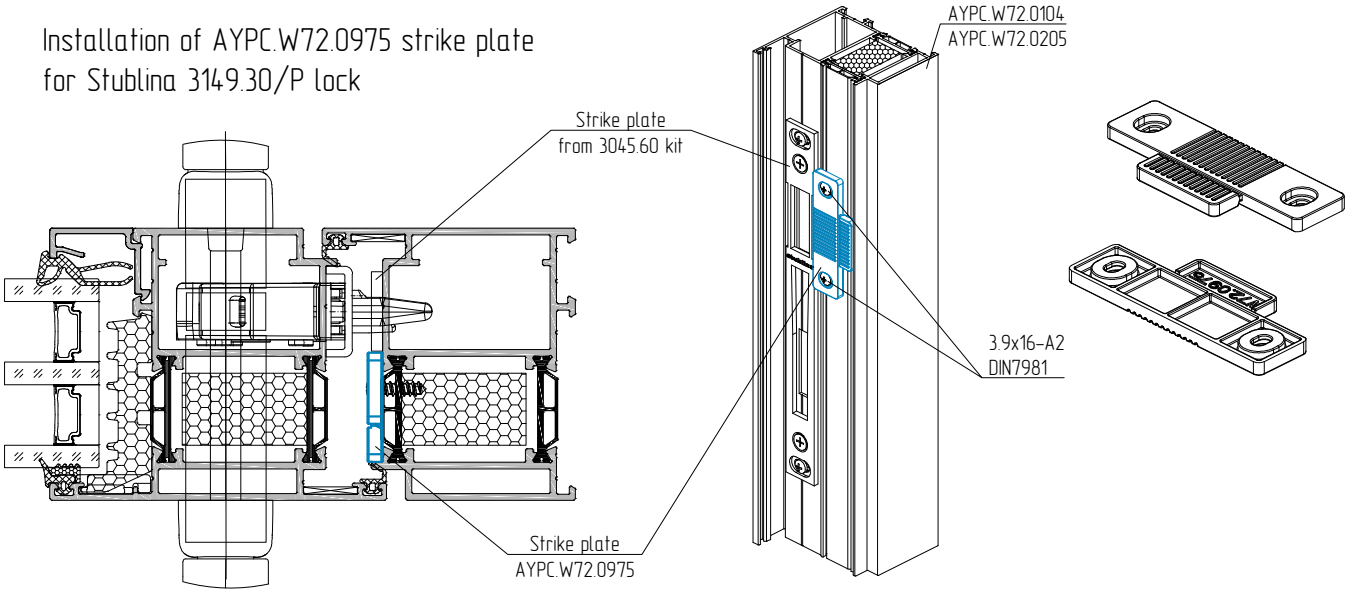

Installation of AYPC.W72.0976 strike plate for Stublina 3021.00 / 3031.00 lock

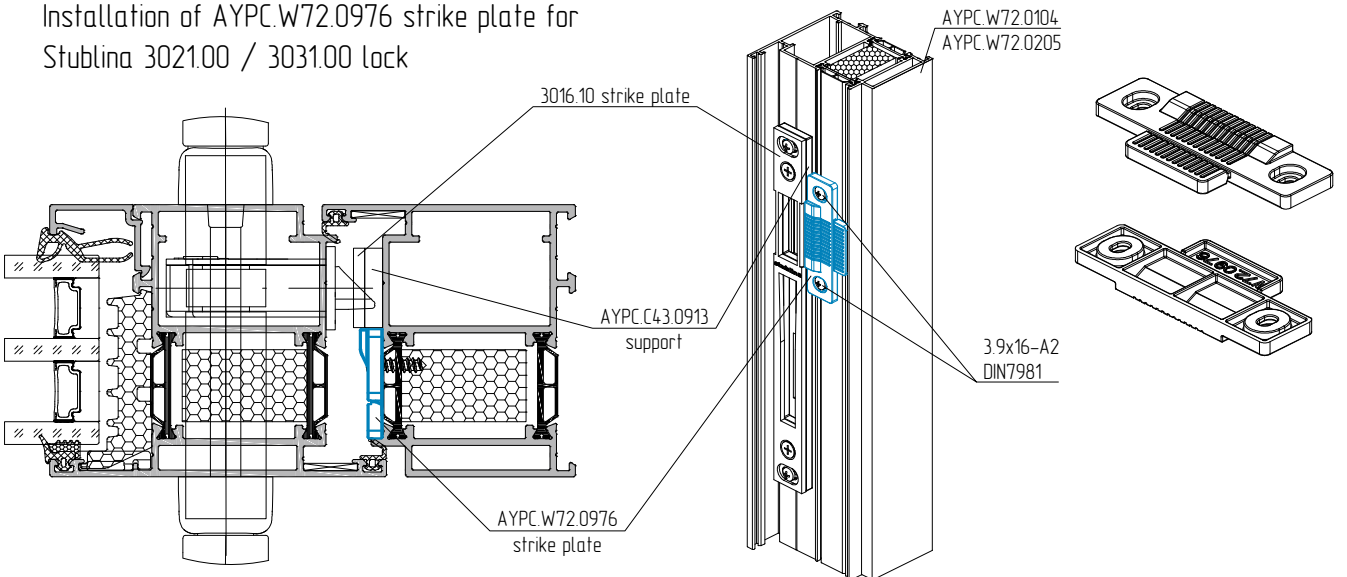

Self-tapping screw 3.9x16-A2 DIN7981 are not included into the delivery set

Frame / leaf profile machining for Stublina 3060.00/3062.00 door latches installation and 3012.00 latch upper strike plate

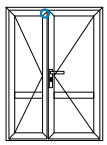

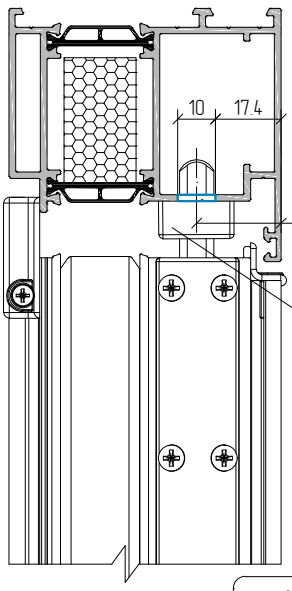

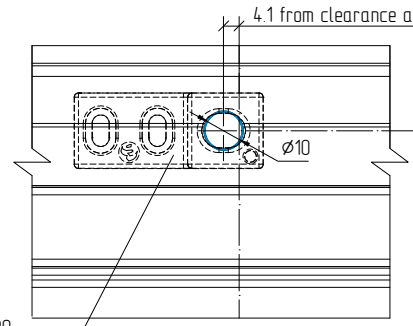

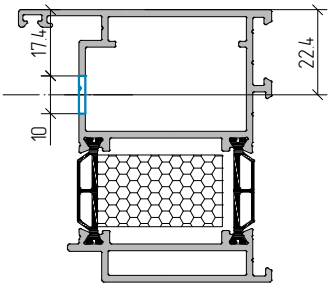

3012.00
latch upper strike plate

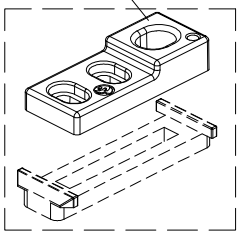

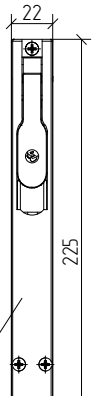

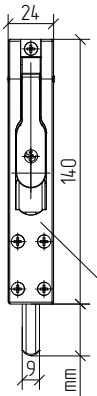

Do not install plastic plate form 3012.00 kit

Different motion of latches

Stublina 3062.00 door latch

Stublina 3060.00 door latch

move 27.4 mm

move 21.5mm

outward opening

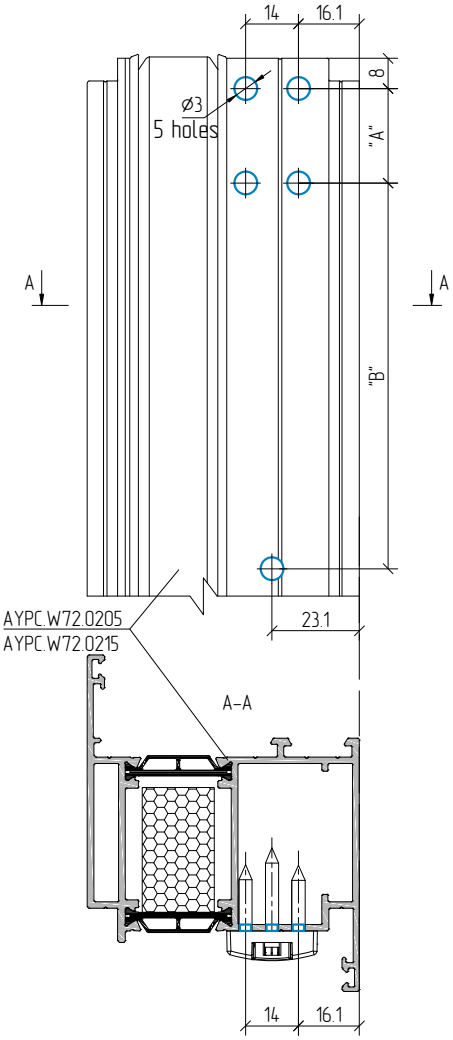

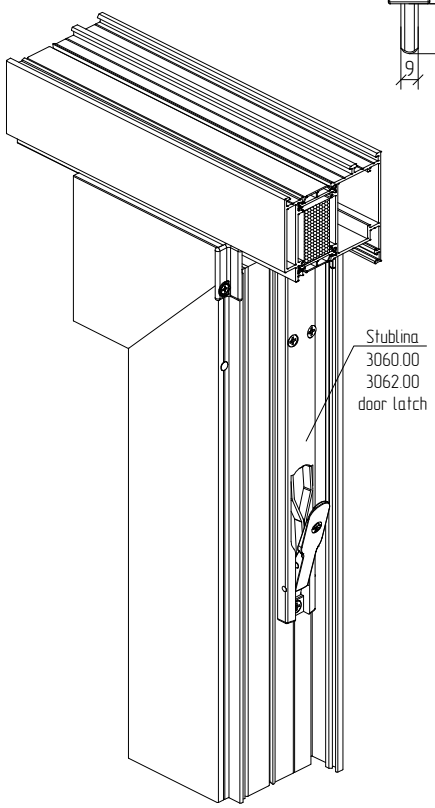

inward opening

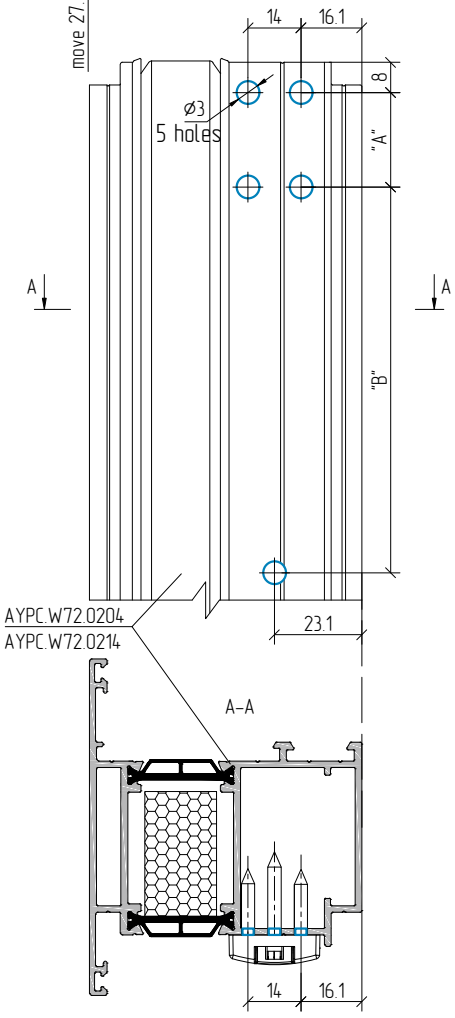

latch	Dimensions	
	"A", mm	"B", mm
3060.00	45	167
3062.00	25	102

Leaf / threshold profile machining for Stublina 3060.00/3062.00 door latches and 3009.00 latch bottom strike plate

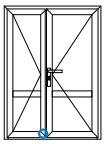

outward opening

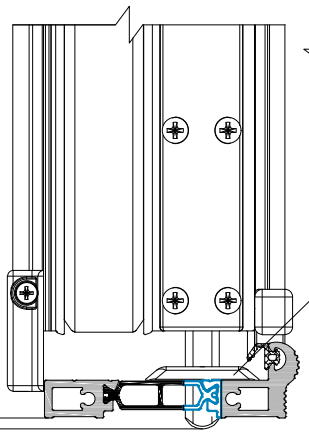

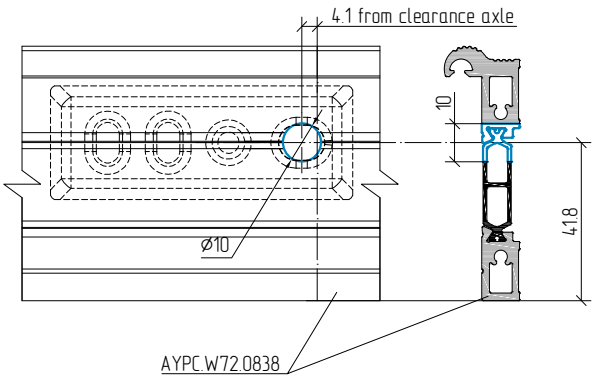

AYPC.W72.0838

3009.00
latch bottom strike plate

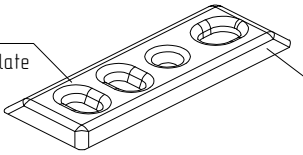

inward opening

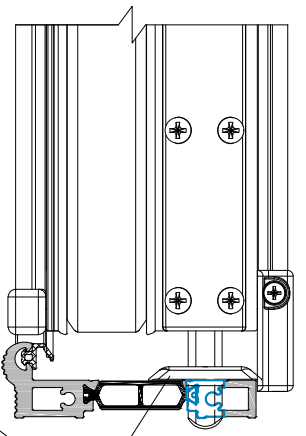

2.9

Different motion of latches

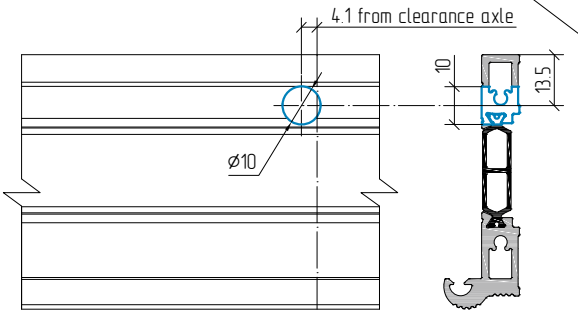

3009.00
latch bottom strike plate

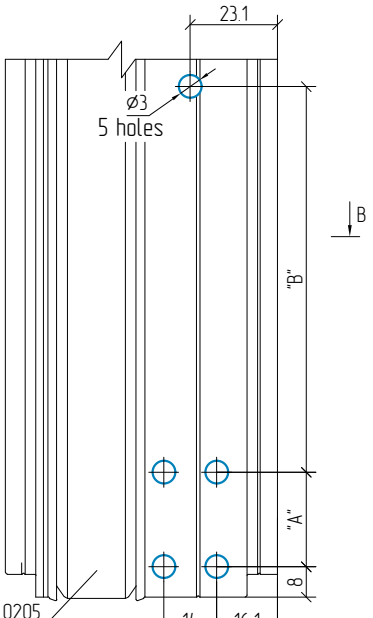

AYPC.W72.0205
AYPC.W72.0215

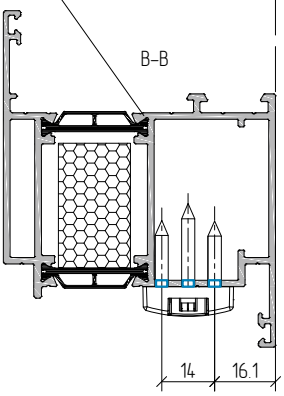

Door latch	Dimensions	
	"A", mm	"B", mm
3060.00	45	167
3062.00	25	102

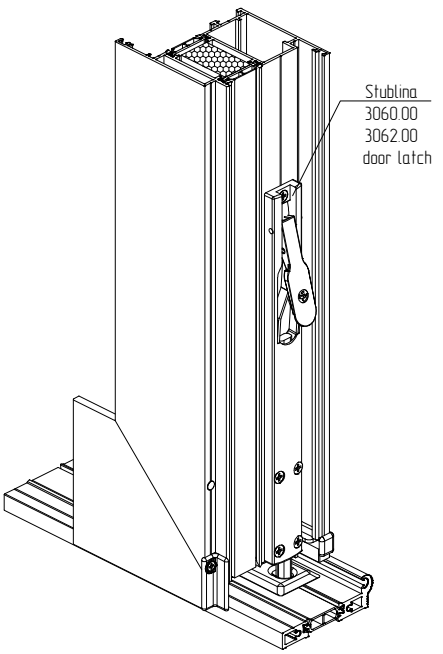

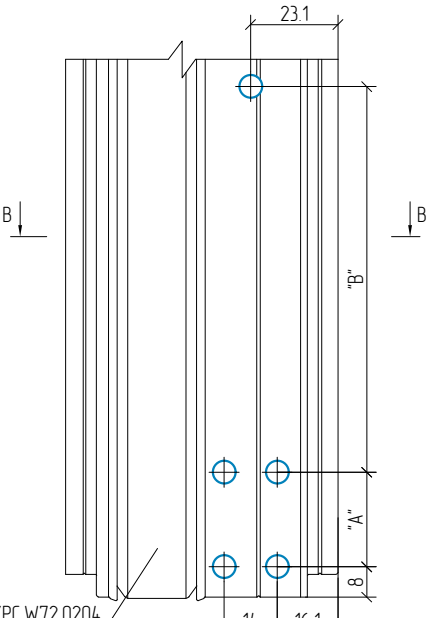

AYPC.W72.0204
AYPC.W72.0214

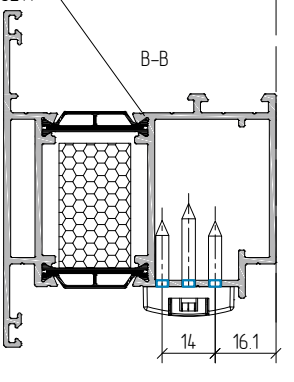

ALUTECH PROFILE SYSTEMS

Machining of leaf profiles for Stublina 3008.00 concealed latch installation with the use of Stublina 3021.00 / 3031.00 locks

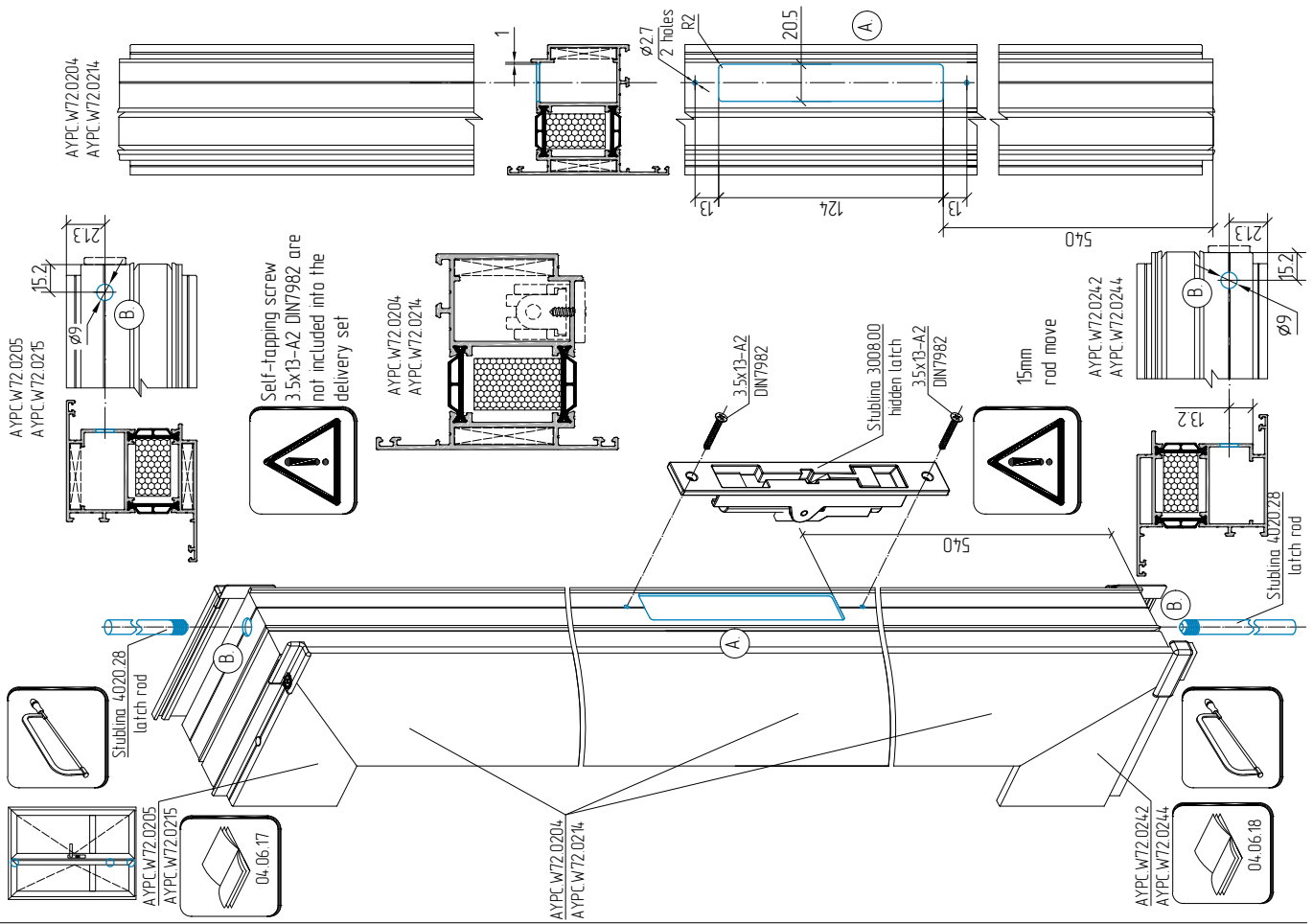

Machining for 3012.00 upper and 3009.00 bottom strike plates installation on the latch

outward opening

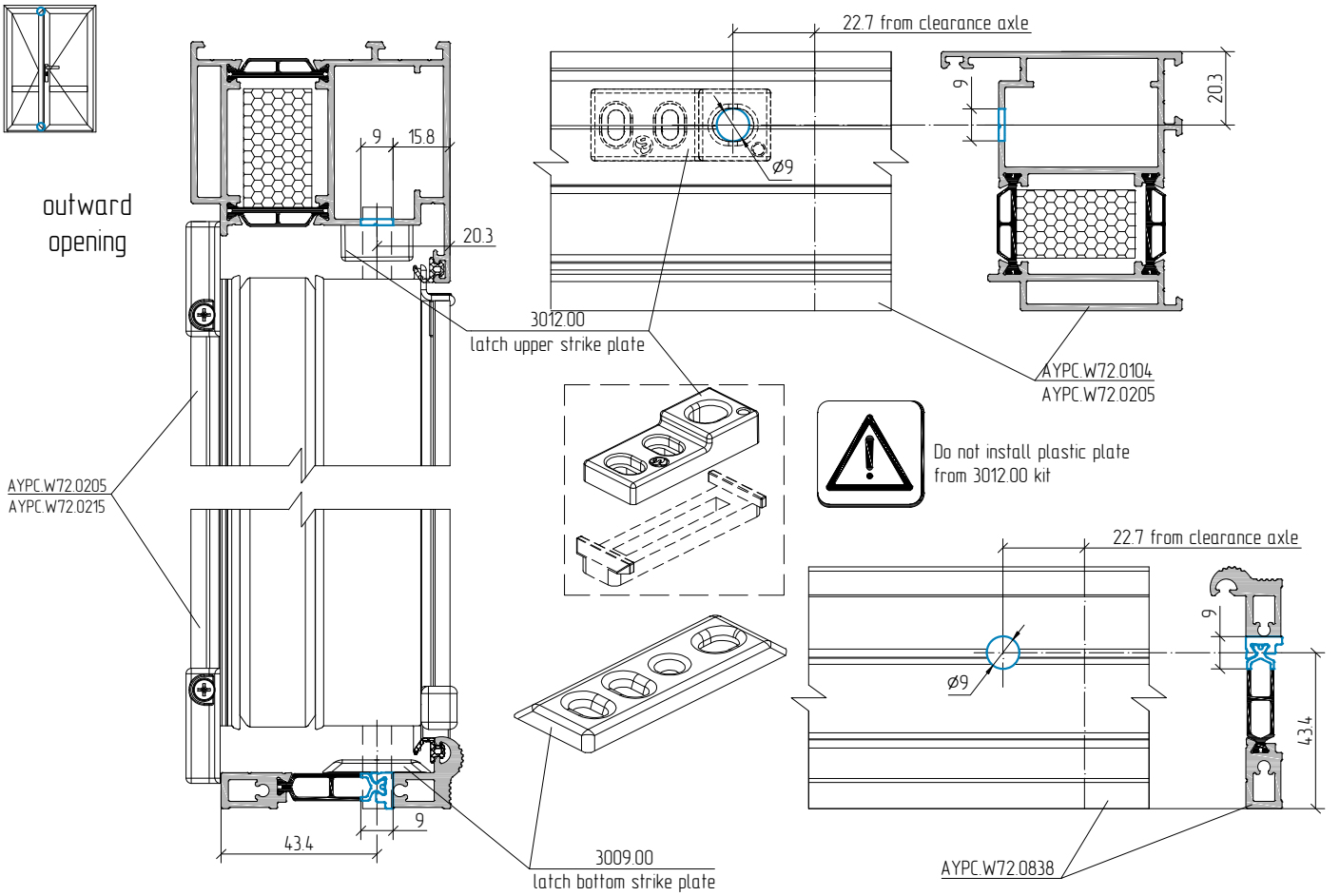

inward opening

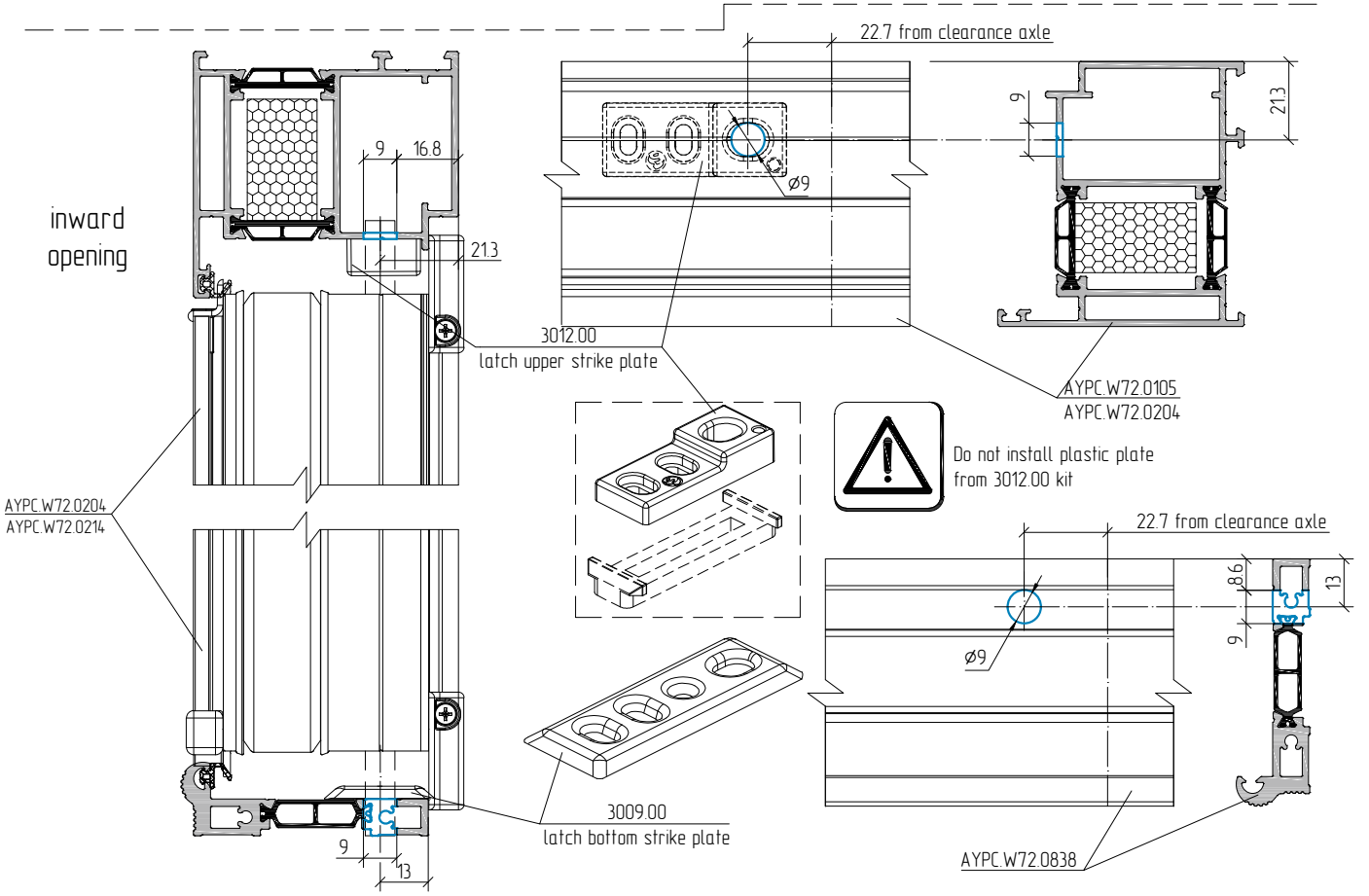

Application of D30 Fuhr Compact M2302QH8SS multipoint lock

Standard

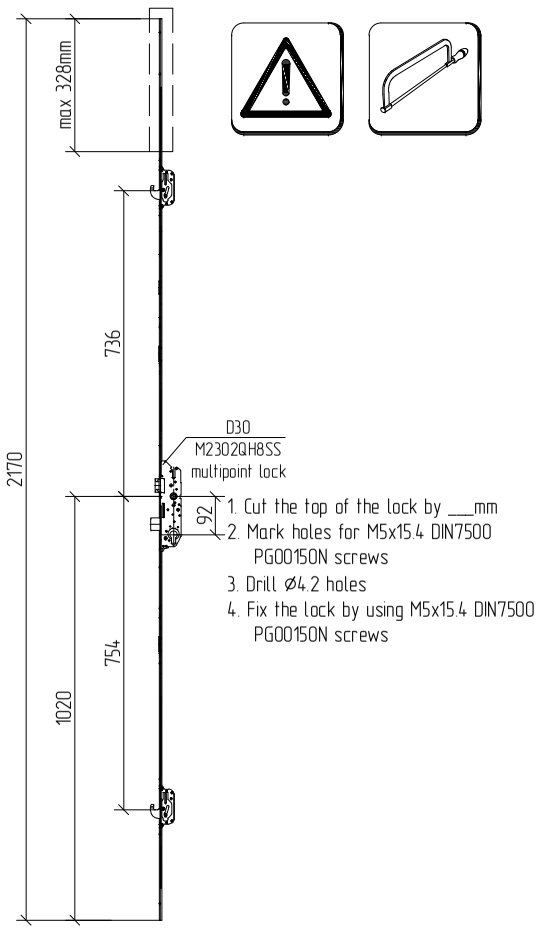

1. Cut the top of the lock by ___mm
2. Mark holes for M5x15.4 DIN7500 PG00150N screws
3. Drill Ø4.2 holes
4. Fix the lock by using M5x15.4 DIN7500 PG00150N screws

High

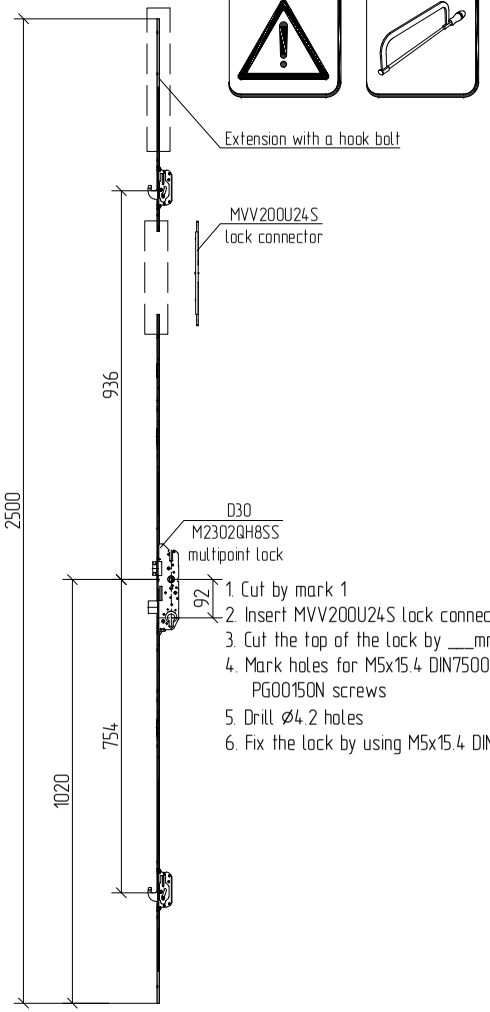

1. Cut by mark 1
2. Insert MVV200U24S lock connector into the cut
3. Cut the top of the lock by ___mm
4. Mark holes for M5x15.4 DIN7500 PG00150N screws
5. Drill Ø4.2 holes
6. Fix the lock by using M5x15.4 DIN7500

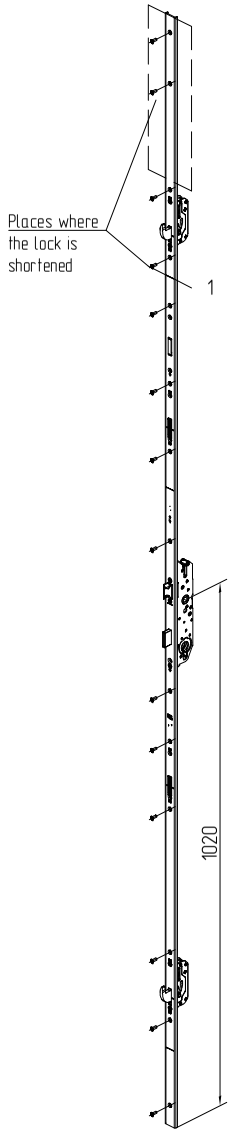

D30 M2302QH8SS multipoint lock can be shortened with the use of special marks.
Use MVV200U24S lock connector to decrease and increase the lock size.
M5x15.4 DIN7500 PG00150N screws are not included into the delivery set

Applicability of accessories with D30 Fuhr Compact M2302QH8SS multipoint lock

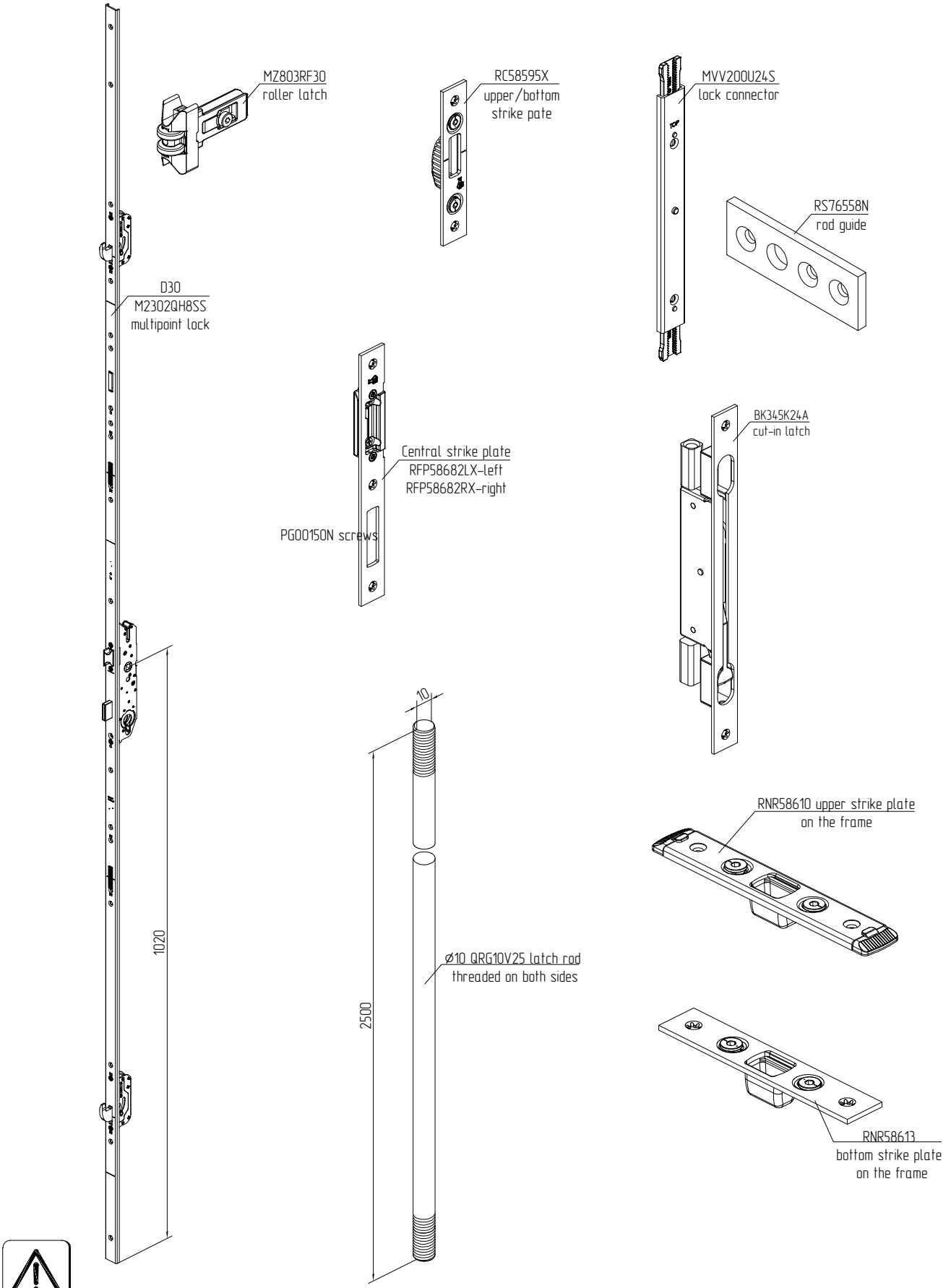

D30 M2302QH8SS multipoint lock can be shortened with the use of special marks

ALUTECH PROFILE SYSTEMS

Application of D30 Fuhr Compact M2302QH8SS multipoint lock

For single leaf doors				
	Article	Name	Qty, pcs	Note
1900< Hleaf<2201	Leaf			
	M2302QH8SS	Multipoint lock D30	1	lever lock
	MZ803RF30	Roller latch	1	if necessary
	Frame			
	RC58595X	Strike plate	2	upper bottom
	RFP58682LX RFP58682RX	Central strike plate	1	left right
	AYPC.W72.0975	Strike plate	1	
	PG00150N	Screw M5x15.4 DIN7500	21	
2202< Hleaf<2500	Leaf			
	M2302QH8SS	Multipoint lock D30	1	lever lock
	MZ803RF30	Roller latch	1	if necessary
	MVV200U24S	Lock connector	1	200 mm
	Frame			
	RC58595X	Strike plate	2	upper bottom
	RFP58682LX RFP58682RX	Central strike plate	1	left right
	AYPC.W72.0975	Strike plate	1	
	PG00150N	Screw M5x15.4 DIN7500	21	

For double leaf doors				
	Article	Name	Qty, pcs	Note
1900< Hleaf<2201	Active leaf			
	M2302QH8SS	Multipoint lock D30	1	lever lock
	MZ803RF30	Roller latch	1	if necessary
	Passive leaf			
	RC58595X	Strike plate	2	upper bottom
	RFP58682LX RFP58682RX	Central strike plate	1	left right
	AYPC.W72.0975	Strike plate	1	
	BK345K24A	Cut-in latch	1	
	QRG10V25	Latch rod	1	ø10, L=2500
	RS76558N	Rod guide	2	upper/bottom
	RNR58610	Strike plate on the frame	1	upper
	RNR58613	Strike plate on the frame	1	bottom
	PG00150N	Screw M5x15.4 DIN7500	30	
2202< Hleaf<2500	Active leaf			
	M2302QH8SS	Multipoint lock D30	1	lever lock
	MZ803RF30	Roller latch	1	if necessary
	MVV200U24S	Lock connector	1	200 mm
	Passive leaf			
	RC58595X	Strike plate	2	upper bottom
	RFP58682LX RFP58682RX	Central strike plate	1	left right
	AYPC.W72.0975	Strike plate	1	
	BK345K24A	Cut-in latch	1	
	QRG10V25	Latch rod	1	ø10, L=2500
	RS76558N	Rod guide	2	upper/bottom
	RNR58610	Strike plate on the frame	1	upper
	RNR58613	Strike plate on the frame	1	bottom
	PG00150N	Screw M5x15.4 DIN7500	30	

D30 M2302QH8SS multipoint lock can be shortened with the use of special marks.
Roller latch MZ803RF30 must be installed while using pull handles.
Use MVV200U24S lock connector to decrease and increase the lock size.
M5x15.4 DIN7500 PG00150N screws are not included into the delivery set

Machining of AYPC.W72.0204/AYPC.W72.0205 leaf profiles for D30 FUHR Compact M2302QH8SS multipoint lock installation

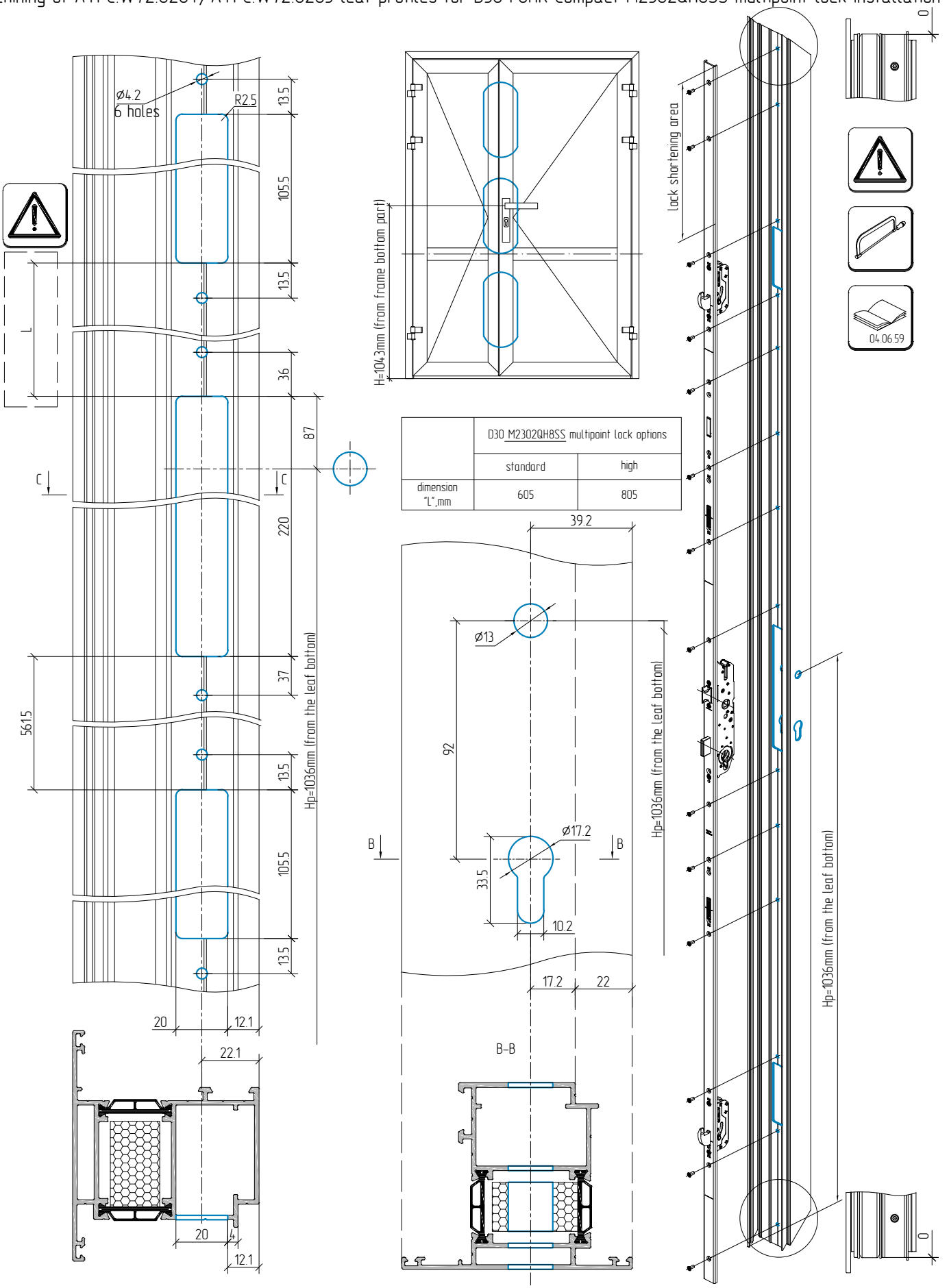

	D30 M2302QH8SS multipoint lock options	
	standard	high
dimension "L",mm	605	805

Machining of profiles for RC58595X–2pcs and RFP58682LX/RFP58682RX strike plate installation

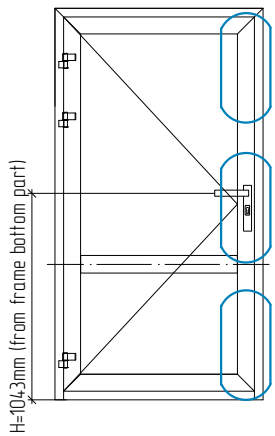

	D30 M2302QH8SS multipoint lock options	
	standard	high
dimension "L",mm	610.5	810.5

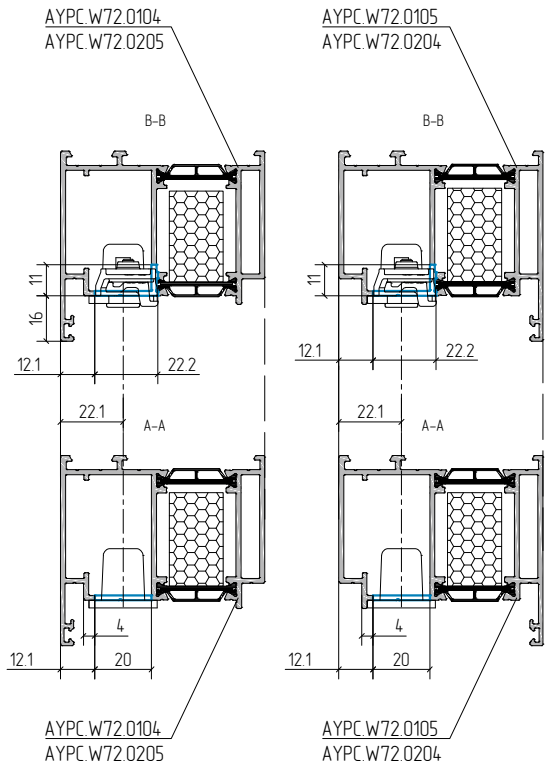

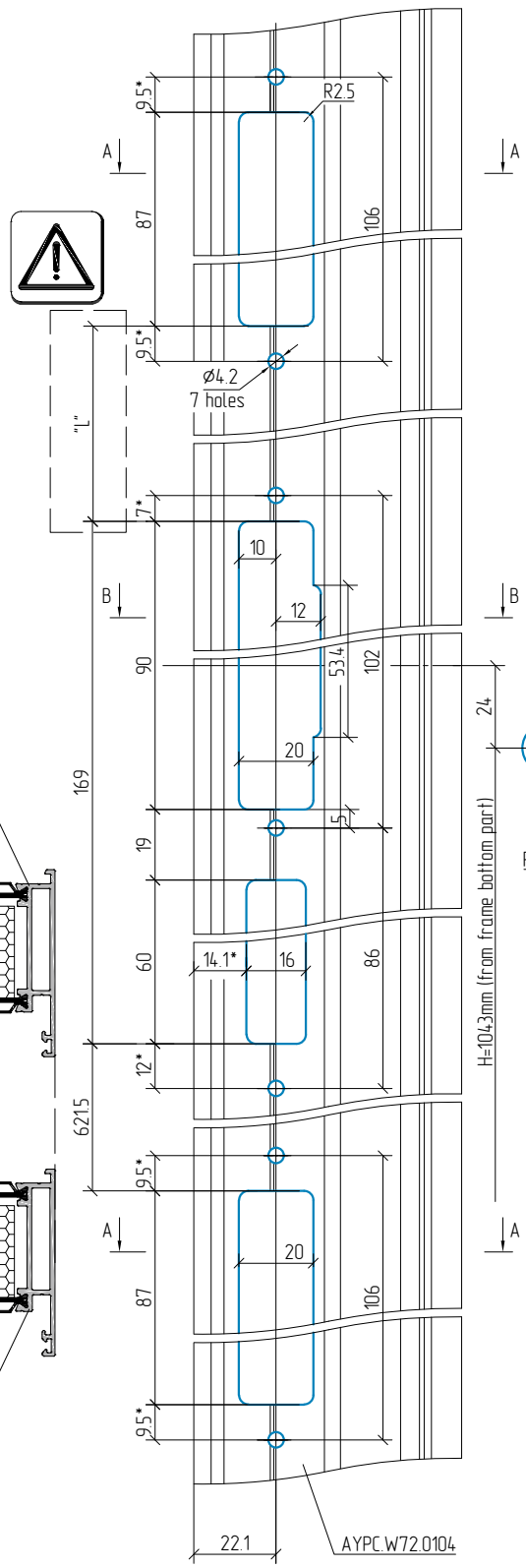

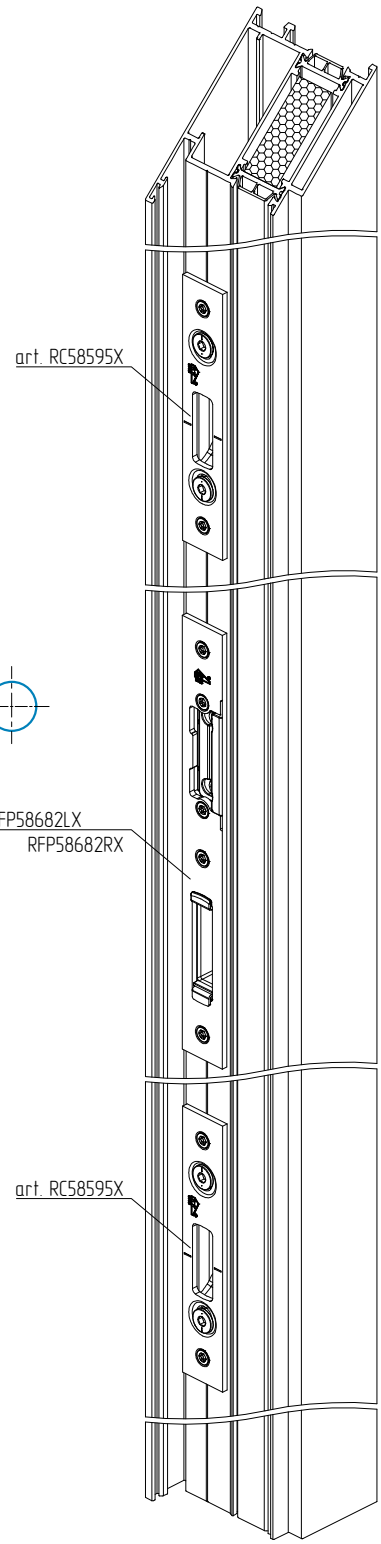

M5x15.4 DIN7500 PG00150N screws
are not included into the delivery set

Machining of leaf profile for RC58595X–2pcs and RFP58682LX/RFP58682RX strike plate installation

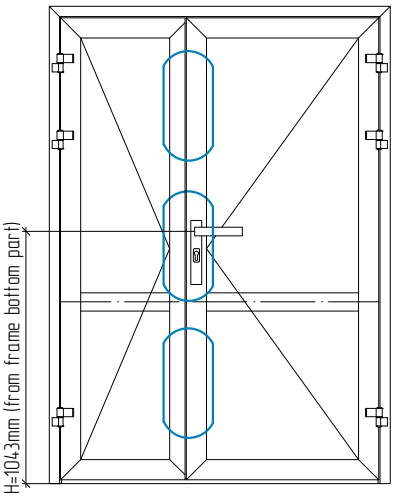

	D30 M2302QH8SS multipoint lock options	
	standard	high
dimension "L",mm	610.5	810.5

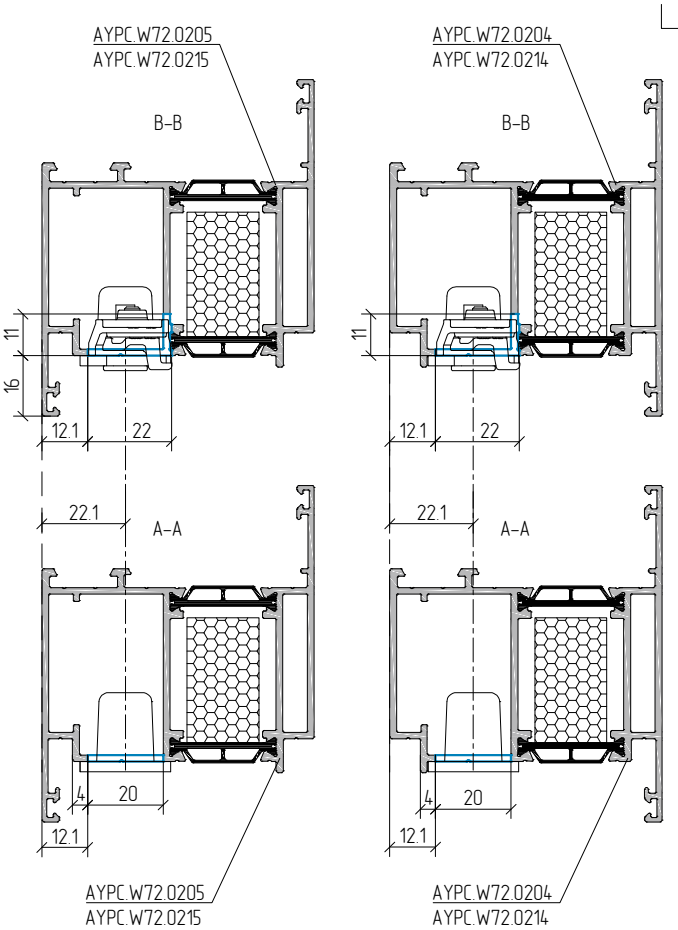

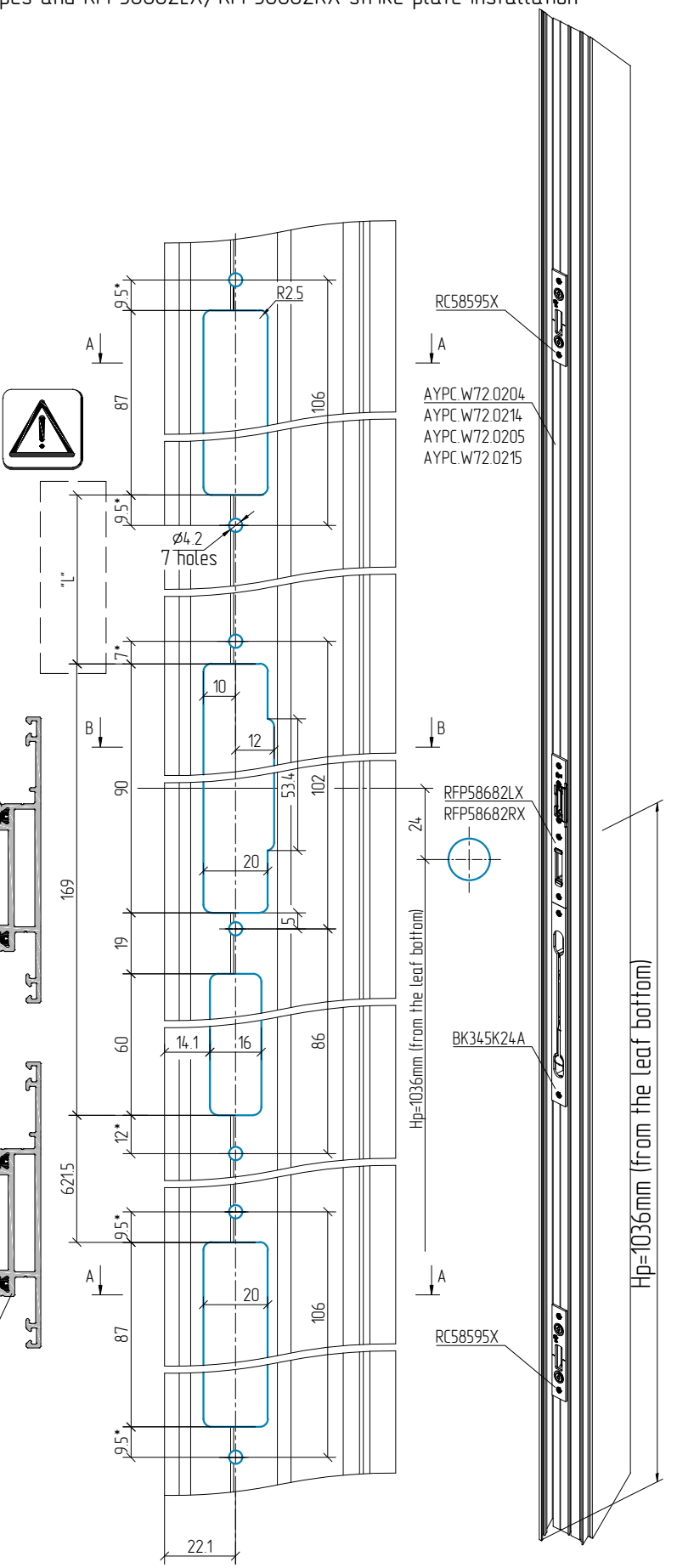

M5x15.4 DIN7500 PG00150N screws are not included into the delivery set

Installation example of AYPC.W72.0975 strike plate with D30 Fuhr Compact M2302QH8SS multipoint lock for outward opening doors

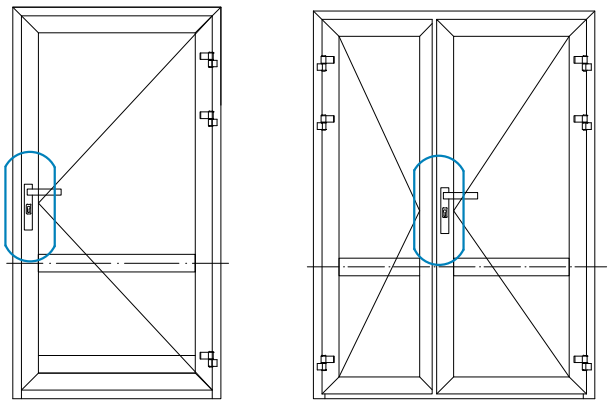

Installation of AYPC.W72.0975 strike plate for D30 Fuhr Compact M2302QH8SS multipoint lock

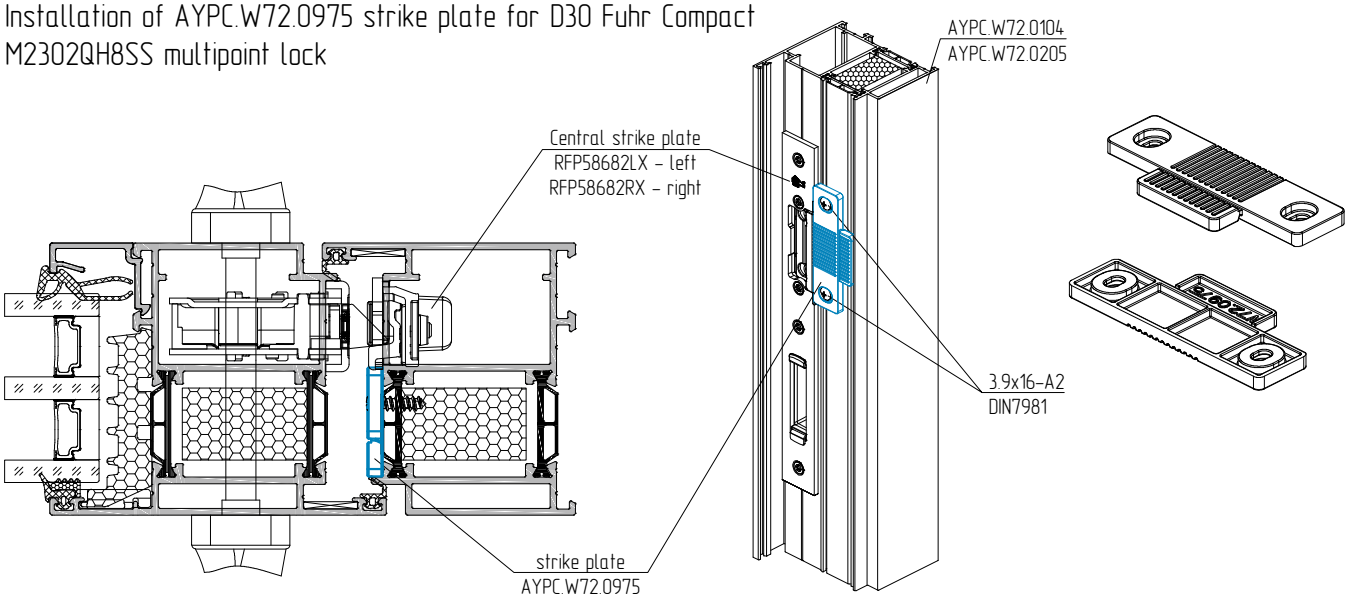

Profile machining for AYPC.W72.0975 / AYPC.W72.0976 strike plates installation

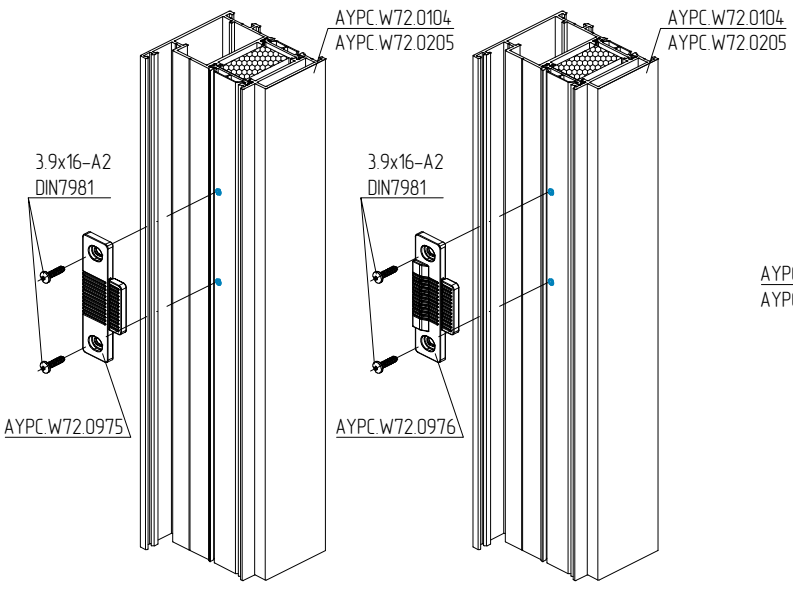

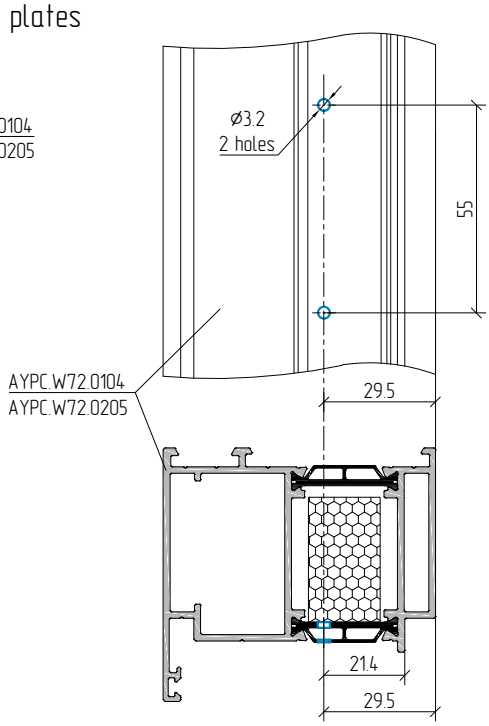

Example of Fuhr BK345K24A cut-in latch, QRG10V25 rod, RS76558N rod guide installation and profile machining

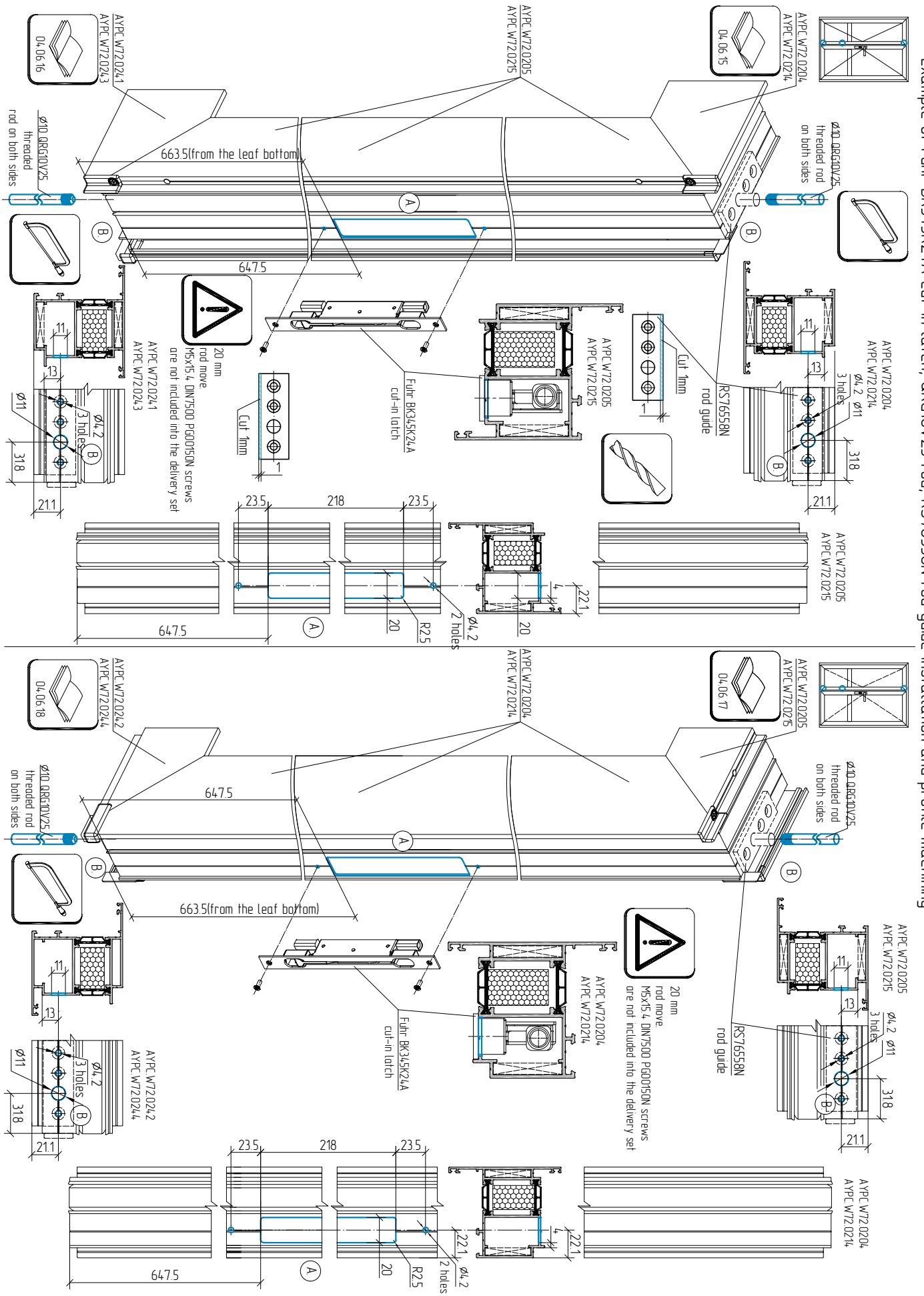

Profiles machining example for upper RNR58610 and bottom RNR58613 strike plates installation on the frame for BK345K24A cut-in latch

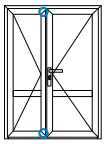

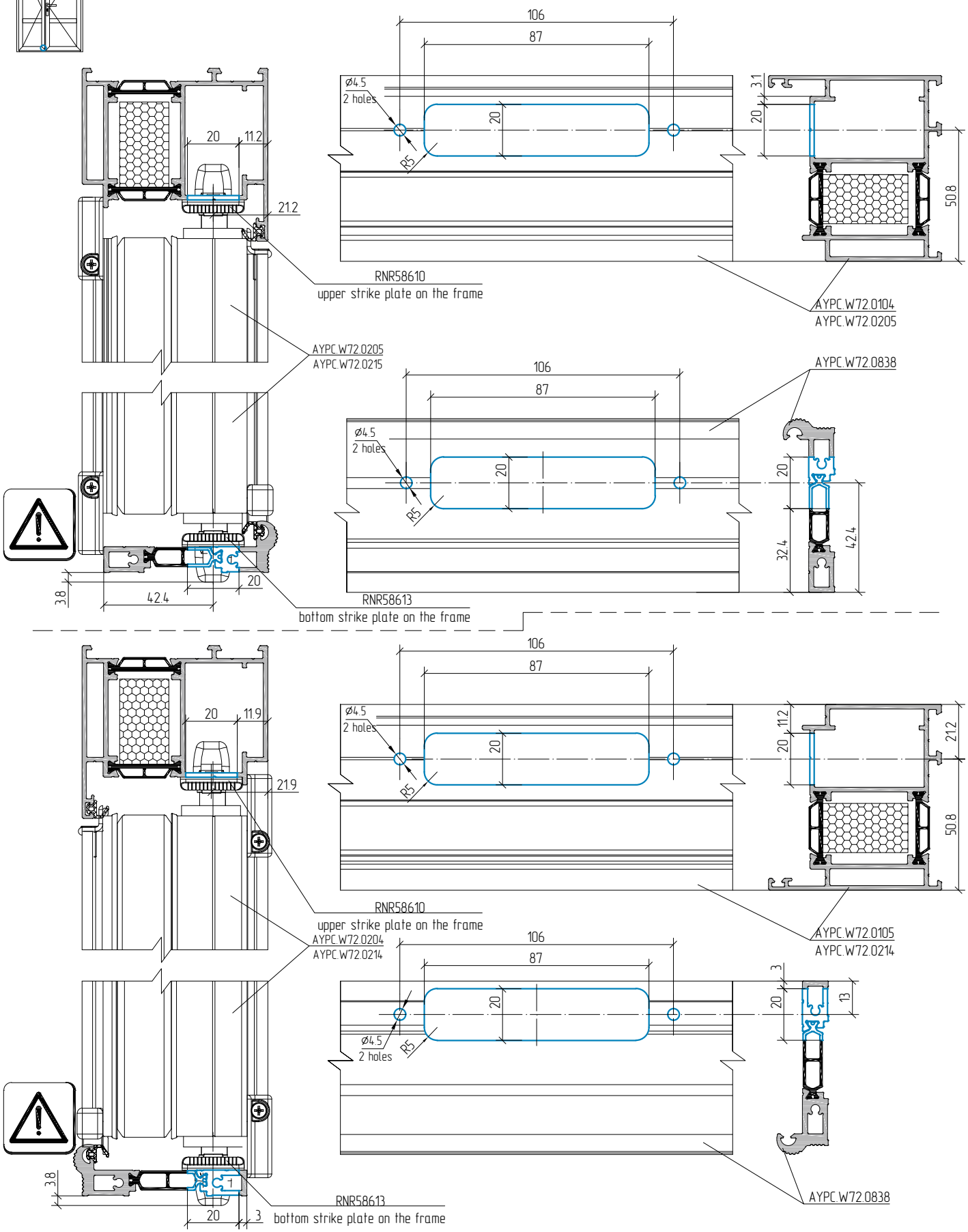

Machining of profiles for DORMA TS Profil door closer installation on the side of hinges

TYPE	MAX leaf dimension. mm	dimension A, mm	dimension B, mm	dimension C, mm
EN2	850	222	215.5	93
EN3	950	222	215.5	59
EN4	1100	222	215.5	43
EN5	1250	308.5	302	43

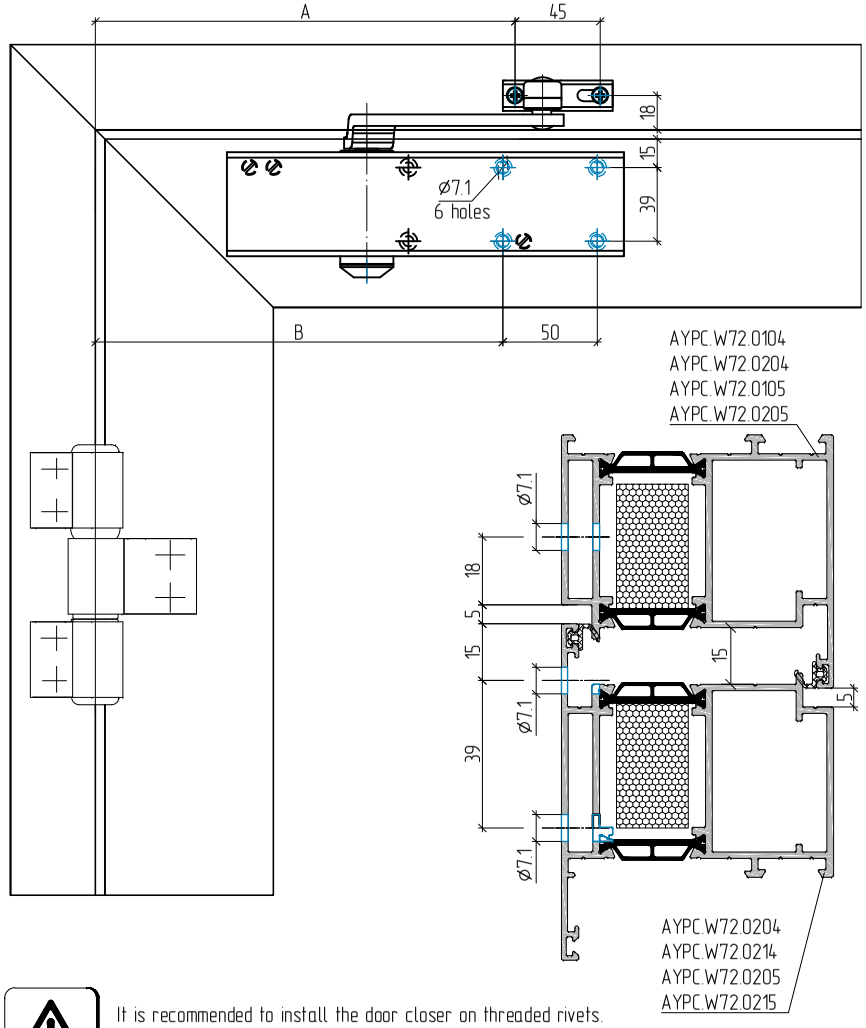

It is recommended to install the door closer on threaded rivets.
Machining is shown for threaded rivets.
Threaded rivets are not included into the delivery set

Machining of profiles for DORMA TS Profil door closer installation on the back of door hinges

TYPE	MAX leaf dimension, mm	dimension A, mm	dimension B, mm	dimension C, mm
EN2	850	222	215.5	93
EN3	950	222	215.5	59
EN4	1100	222	215.5	43
EN5	1250	308.5	302	43

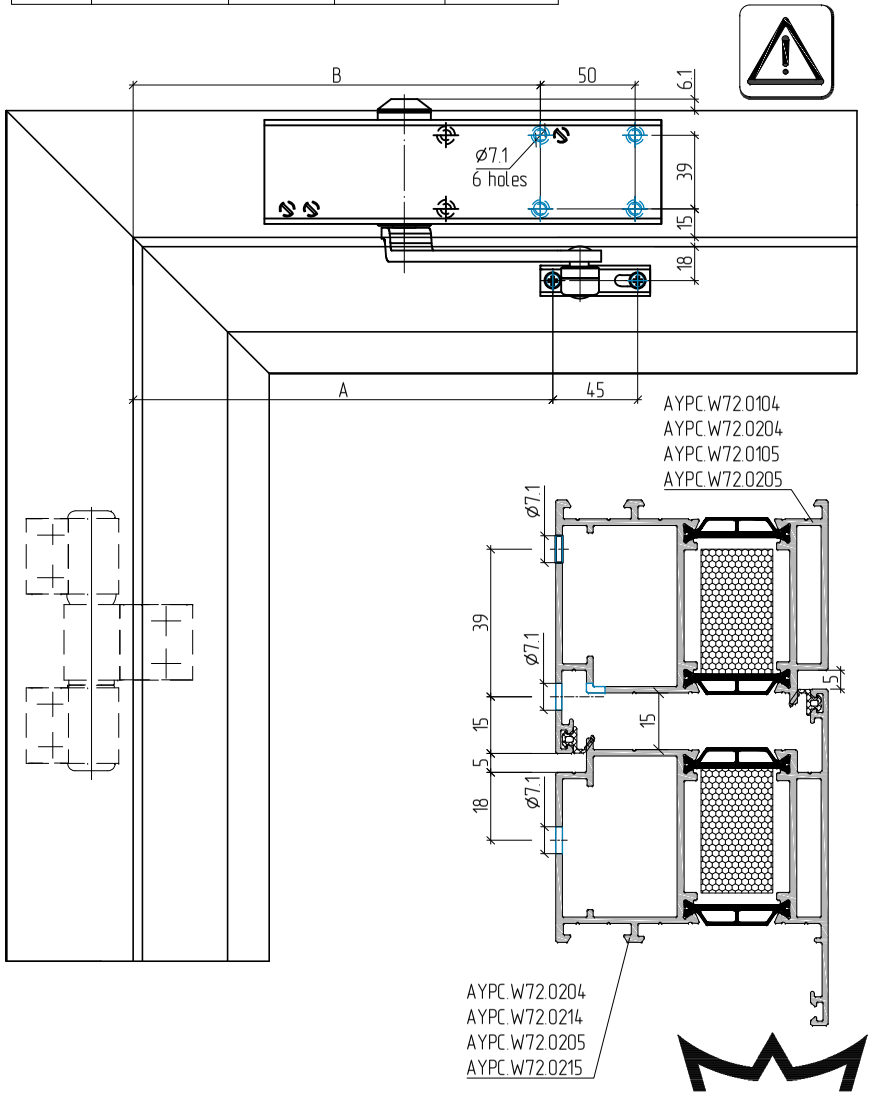

DORMA ITS 96 EN 2-4 concealed door closer installation scheme

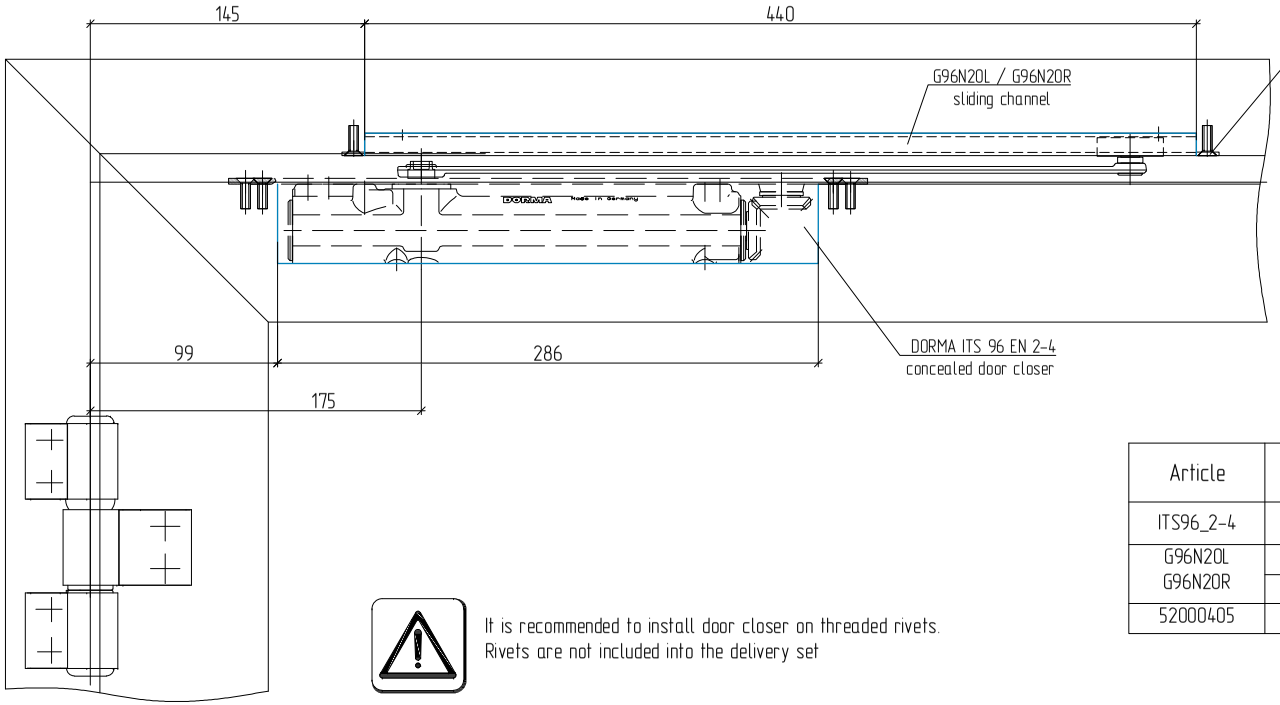

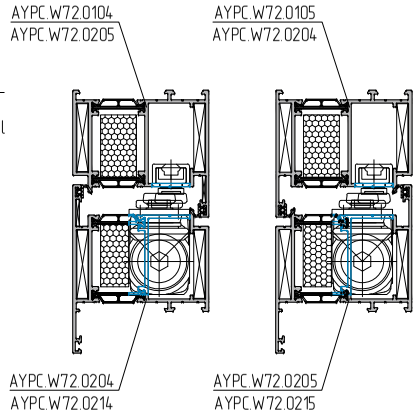

Article	Name	Qty, pcs	Note
ITS96_2-4	Concealed door closer	1	Lleaf 850mm...1100mm
G96N20L G96N20R	Sliding channel left	1	
	Sliding channel right		
52000405	Brackets kit for the channel	1	

It is recommended to install door closer on threaded rivets.
Rivets are not included into the delivery set

Frame profile machining for G96N20L / G96N20R sliding channel installation

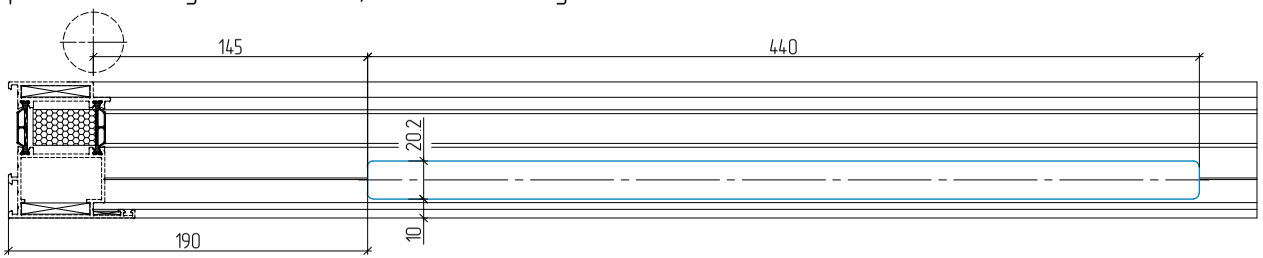

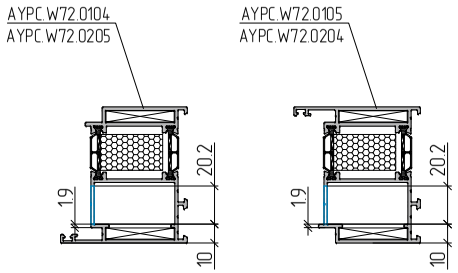

Leaf profile machining for DORMA ITS 96 EN 2-4 concealed door closer installation

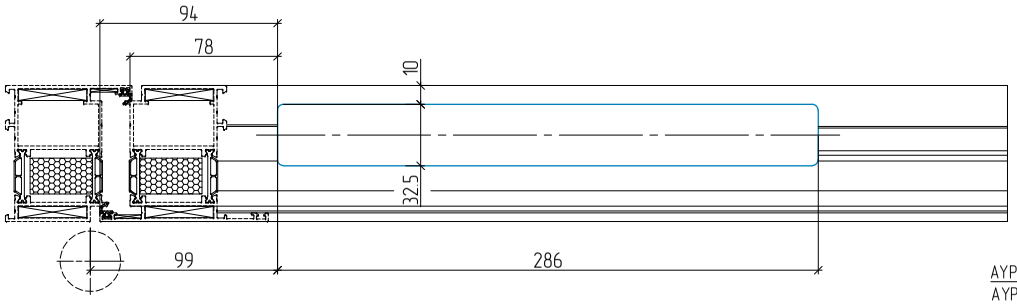

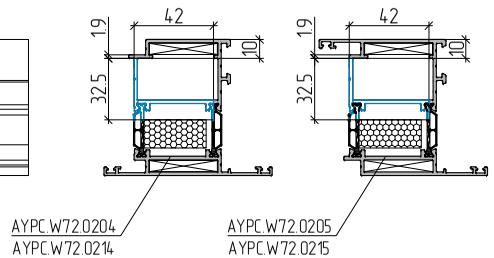

Installation of 114.SS.450.45 and 114.SS.1200.45 steel handles kit

Article	"A", mm	"B", mm
114.SS.450.45	450	650
114.SS.1200.45	1200	1400

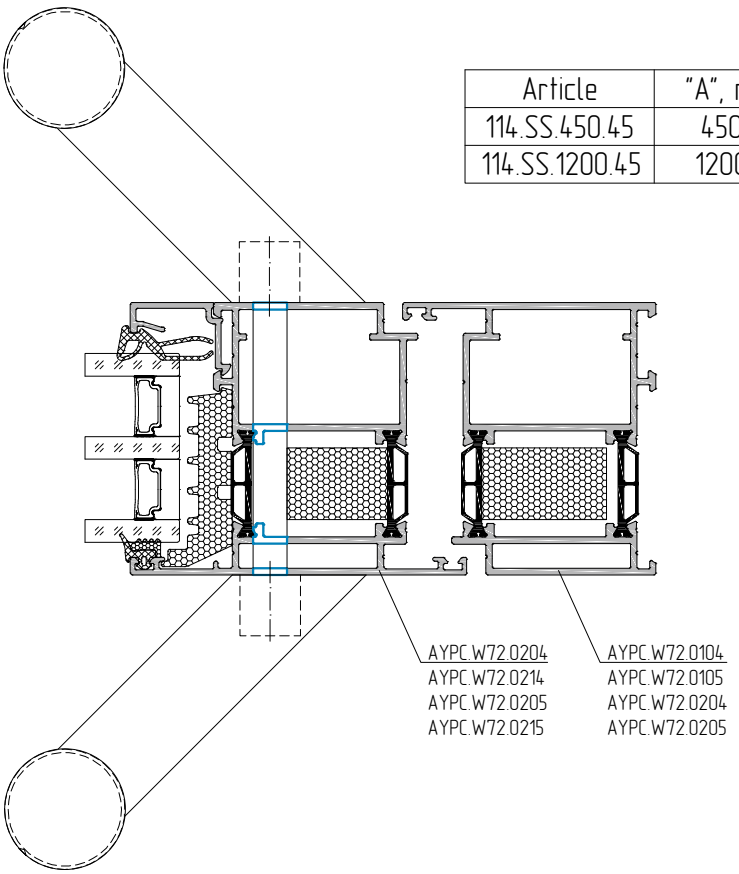

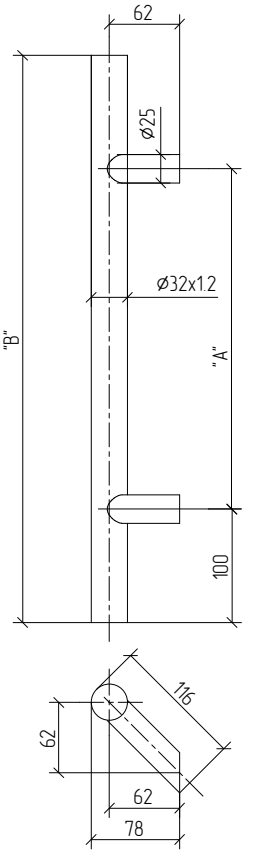

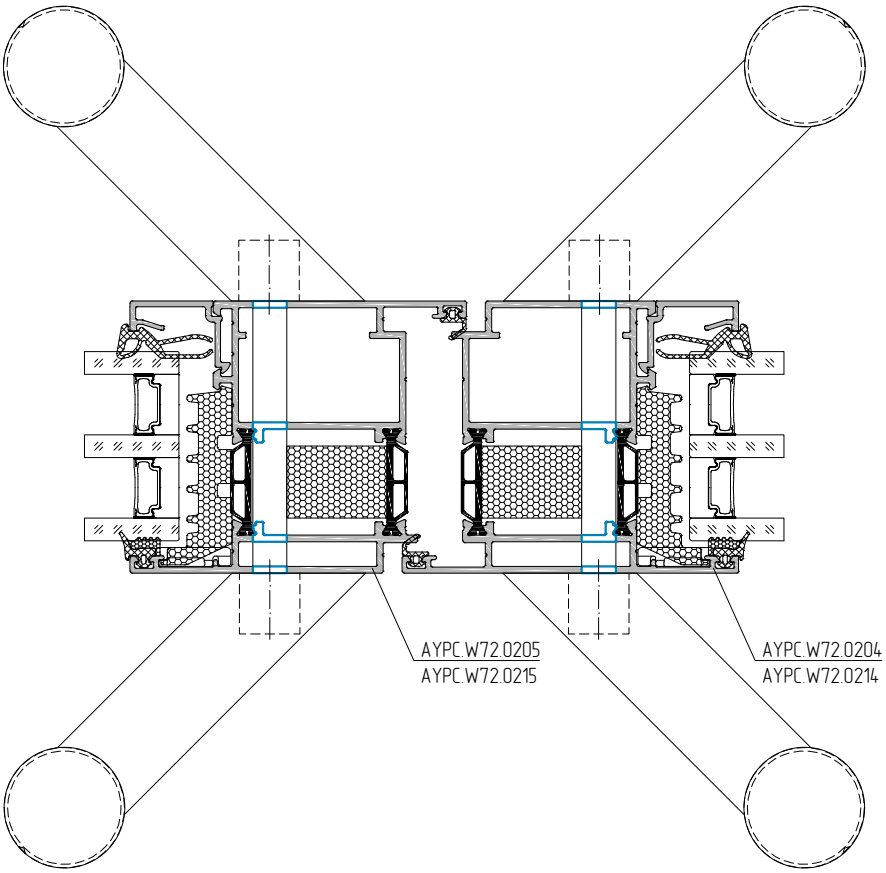

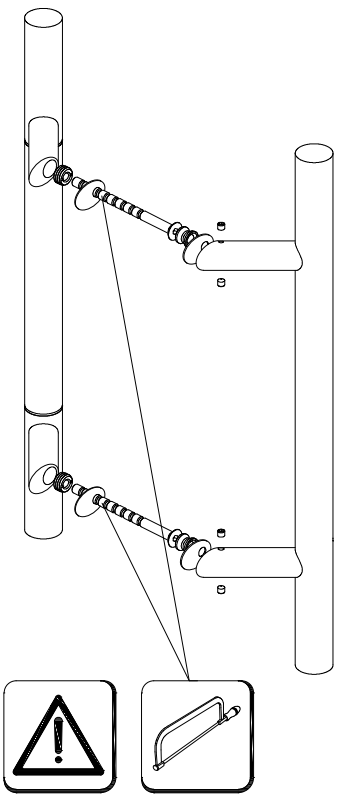

Leaf profile machining for 114.SS.450.45 and 114.SS.1200.45 steel handles kit installation

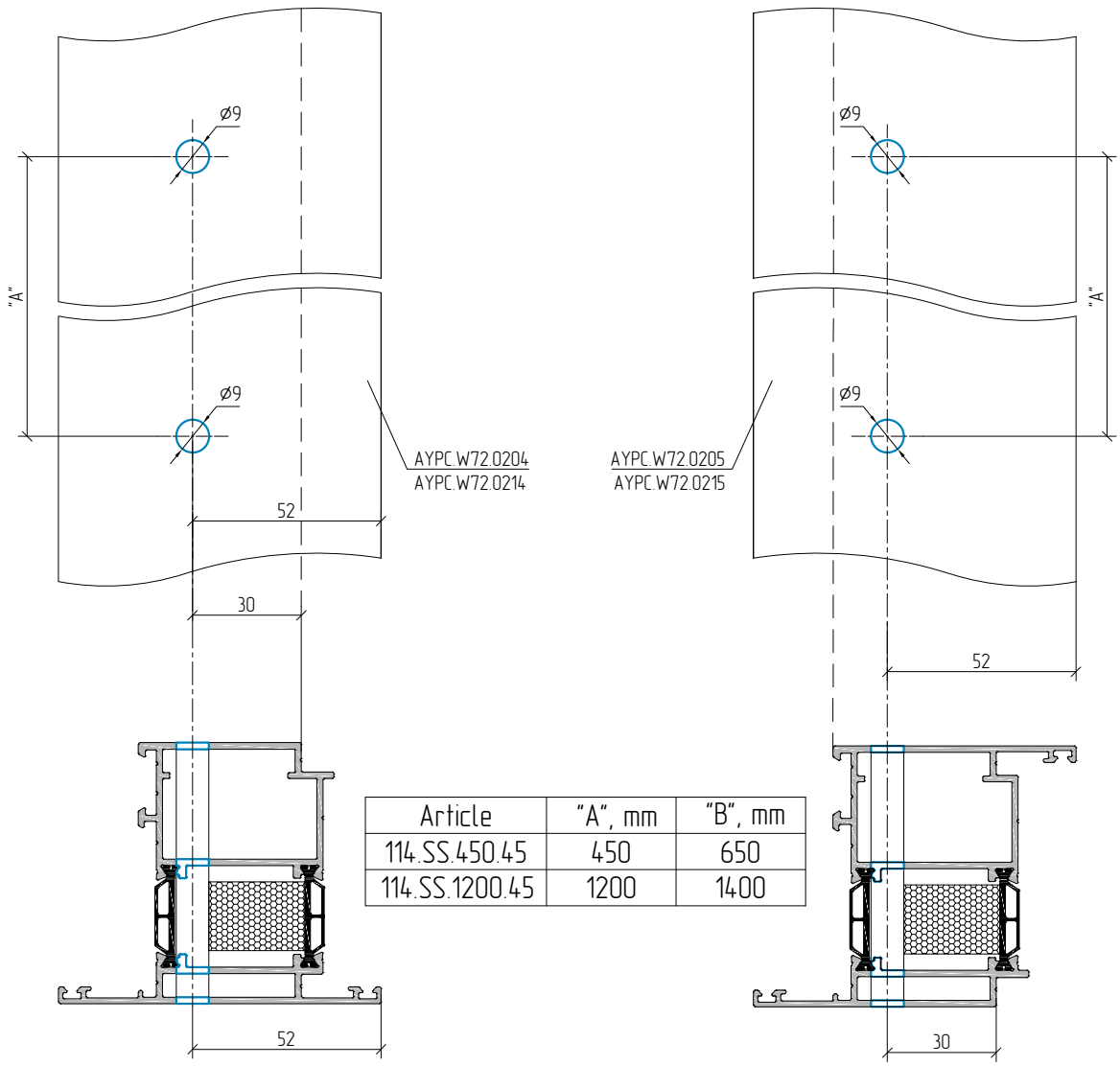

Article	"A", mm	"B", mm
114.SS.450.45	450	650
114.SS.1200.45	1200	1400

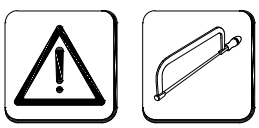

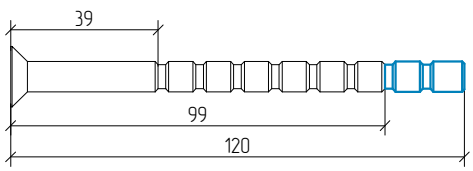

Before assembly it is necessary to shorten handle fixation screws down to 99 mm

Door leaf dimensions
(minimum and maximum width / maximum high)
for DORMA PHA2000 panic bar

outward opening / inward opening

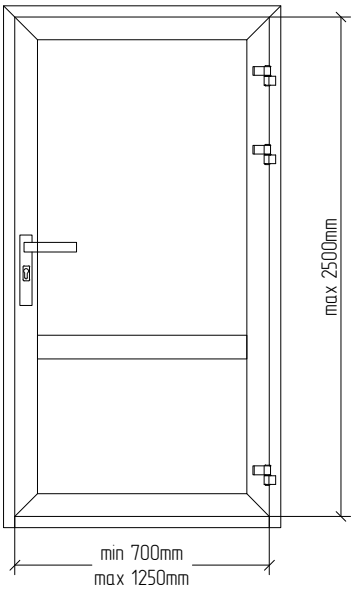

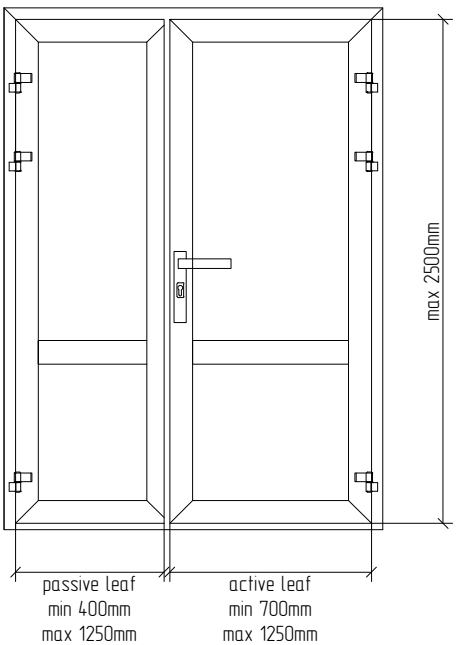

Application of Dorma PHA2000 panic bar

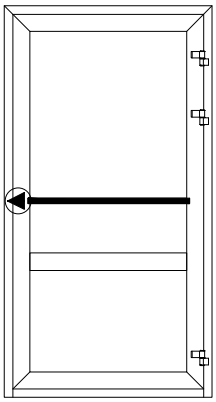

For single leaf doors				
	Article	Name	Qty, pcs	Note
Single point locking	1900< Hleaf<2500			
	PHA2101	One point locking mechanism	1	
	PHA2105	Push bar	1	
	PHT01	Exterior access lock	1	options
	150F	Cylinder 30 / 10	1	
	PHTS105	Extended handle spindle	1	
Three point locking	1900< Hleaf<2500			
	PHA2101	One point locking mechanism	1	
	PHA2105	Push bar	1	
	PHA2202	Two point locking mechanism	1	
	PHX04	Connecting rod kit	1	Hleaf<2270
	PHX05	Connecting rod kit	1	Hleaf<2500
	PHT01	Exterior access lock	1	options
	150F	Cylinder 30 / 10	1	
	PHTS105	Extended handle spindle	1	

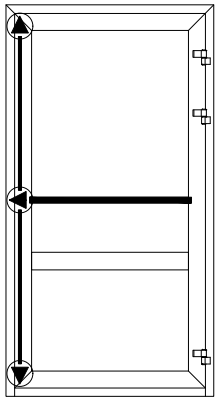

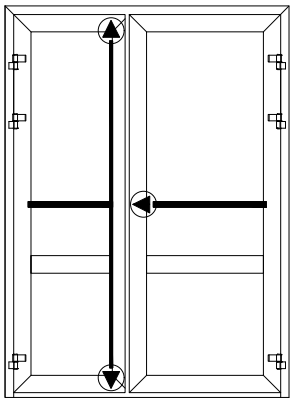

For double leaf doors				
	Article	Name	Qty, pcs	Note
Three point locking	1900< Hleaf<2500			
	PHA2101	One point locking mechanism	1	active leaf
	PHA2105	Push bar	2	
	PHA2201	Two point locking mechanism	1	passive leaf
	PHA2202	Two point locking mechanism	1	
	PHX04	Connecting rod kit	1	Hleaf<2270
	PHX05	Connecting rod kit	1	Hleaf<2500
	PHT01	Exterior access lock	1	options
	150F	Cylinder 30 / 10	1	
	PHTS105	Extended handle spindle	1	
Five point locking	1900< Hleaf<2500			
	PHA2101	One point locking mechanism	1	active leaf
	PHA2105	Push bar	2	
	PHA2201	One point locking mechanism	1	passive leaf
	PHA2202	Two point locking mechanism	2	
	PHX04	Connecting rod kit	2	Hleaf<2270
	PHX05	Connecting rod kit	2	Hleaf<2500
	PHT01	Exterior access lock	1	options
	150F	Cylinder 30 / 10	1	
	PHTS105	Extended handle spindle	1	

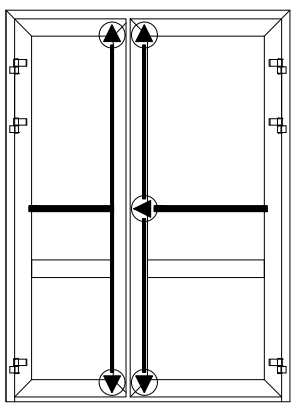

Accessories for Dorma PHA2000

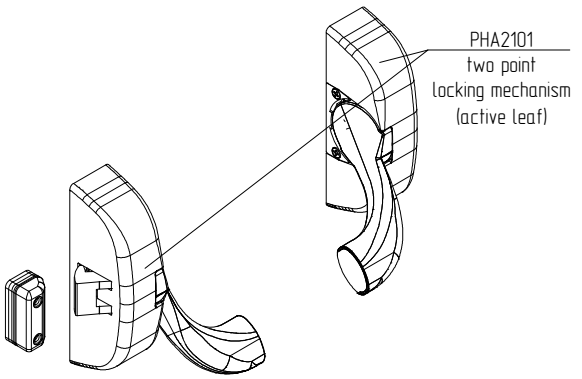

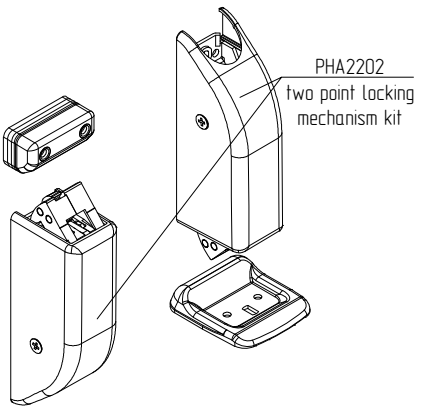

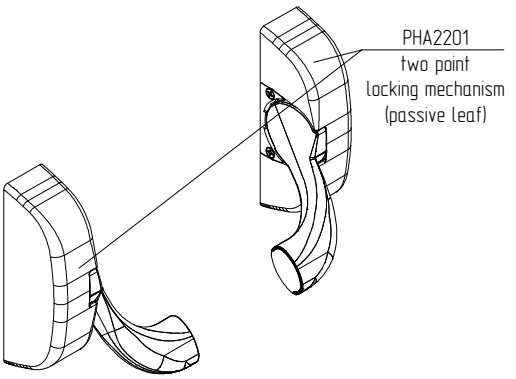

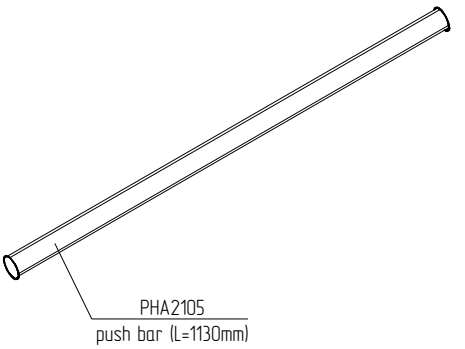

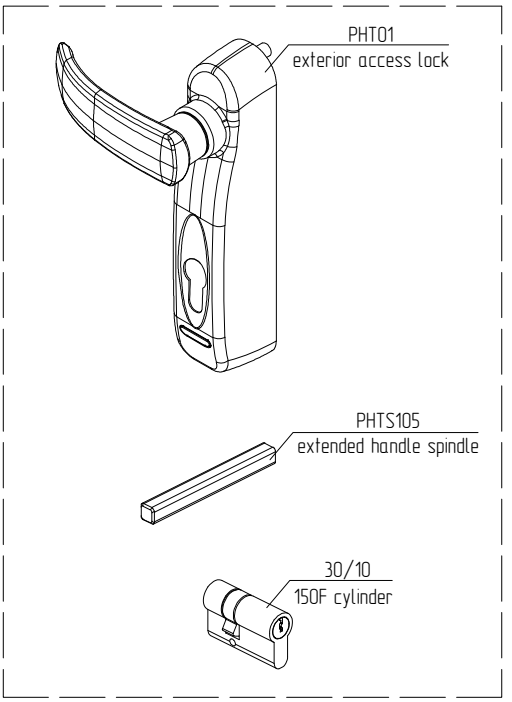

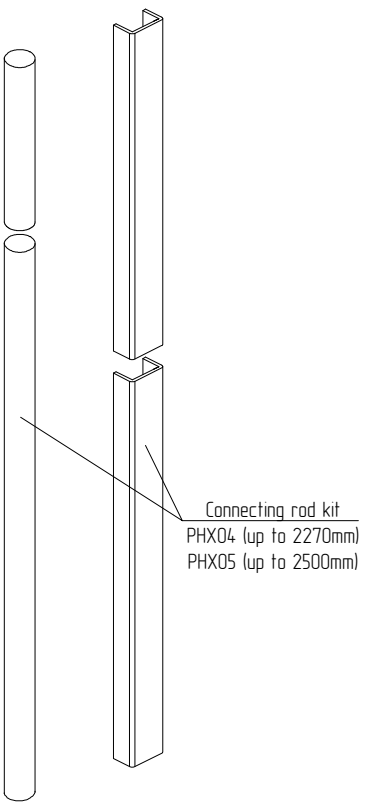

Scheme, sequence and possible options of installation are shown in mounting instructions

Leaf profile machining for PHA2101 single point lock

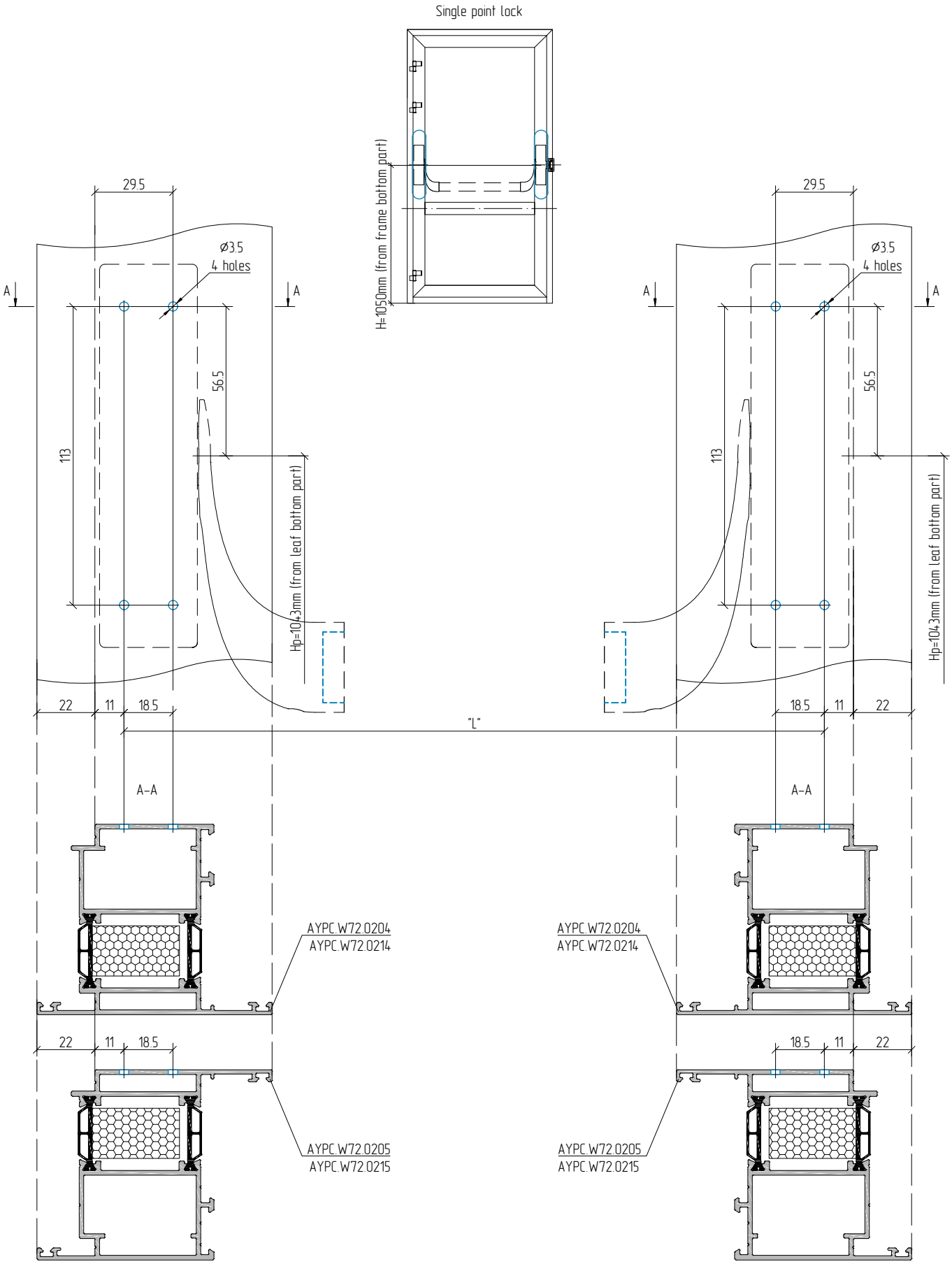

Machining of profiles for strike plate installation from PHA2101 kit

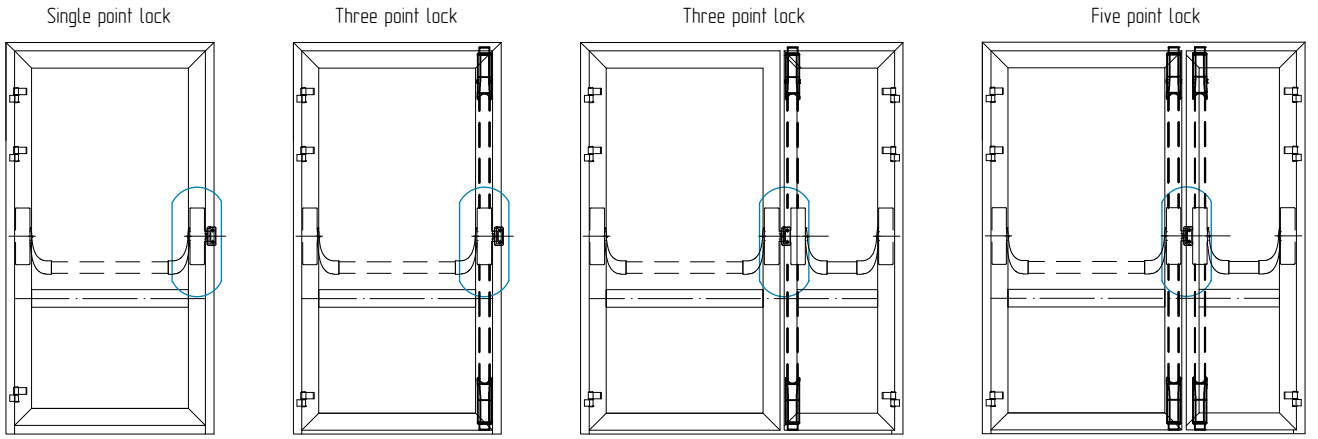

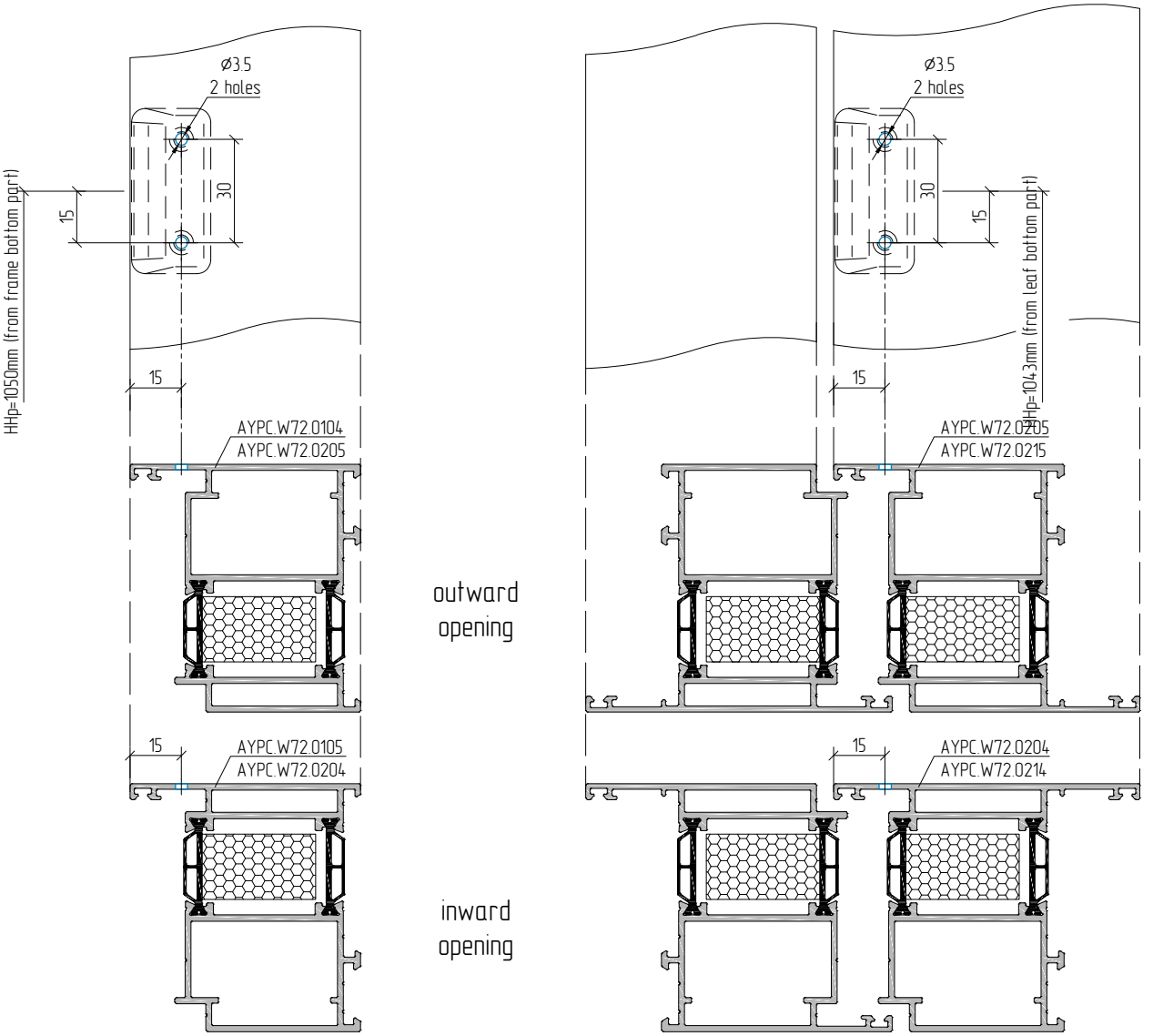

Machining of profiles for PHA2101 single point lock

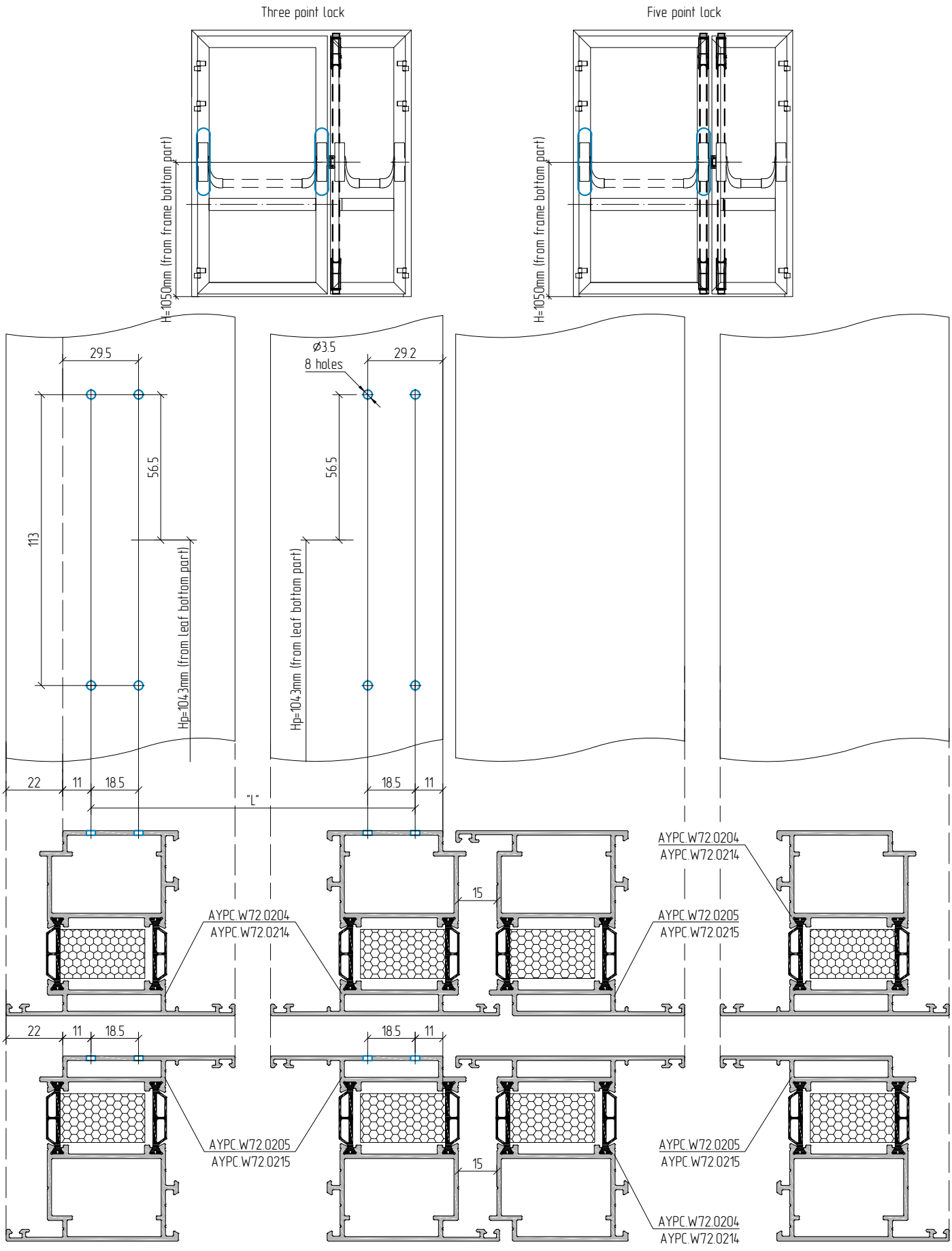

Machining of profiles for PHA2201 two point lock central part on passive leaf

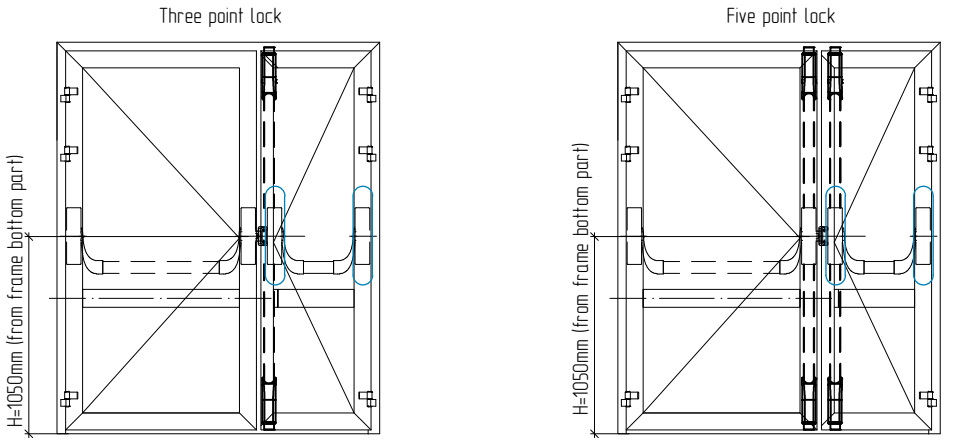

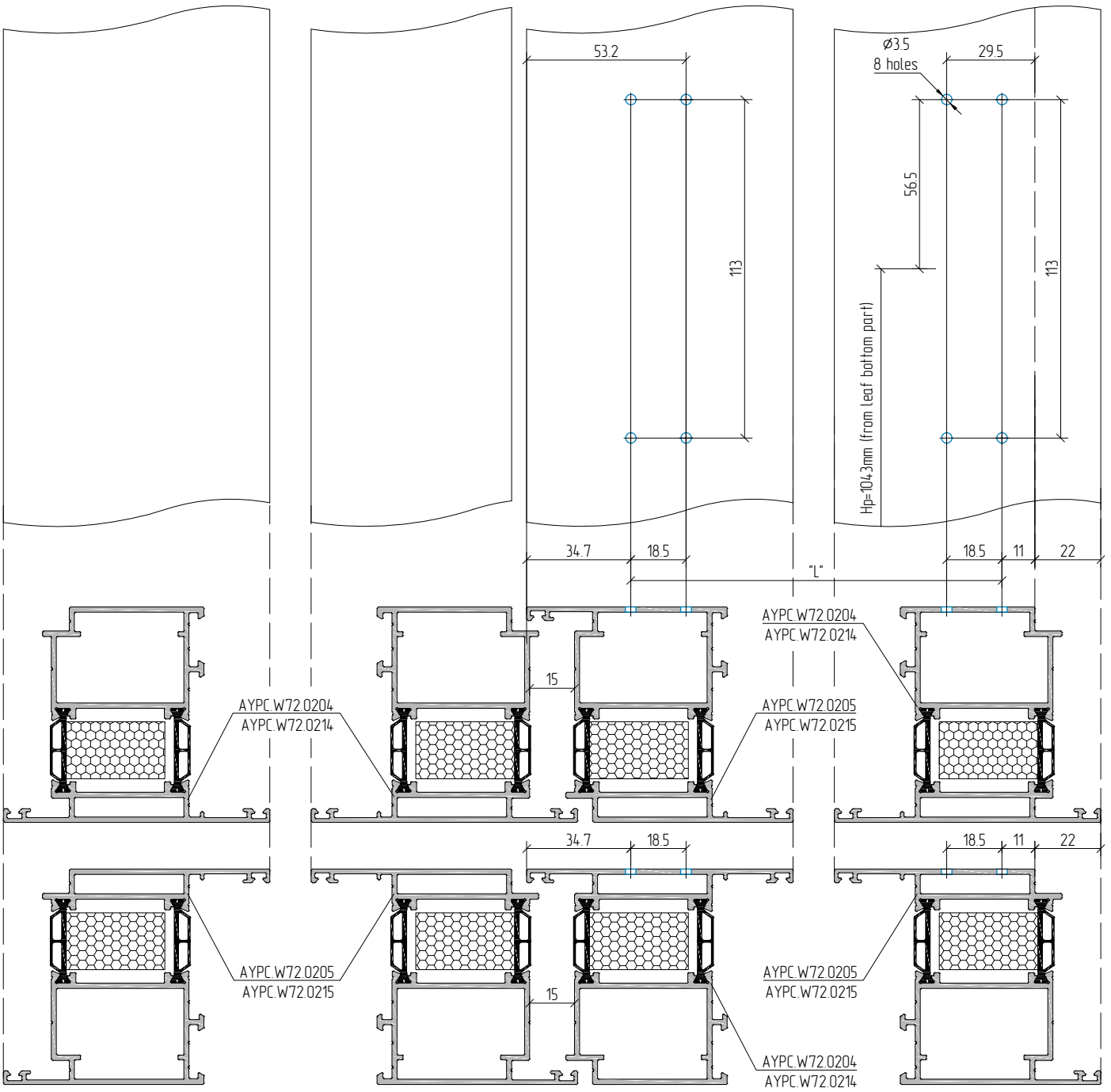

Machining of profiles for PHA2202 upper clip kit on passive leaf

Three point locking

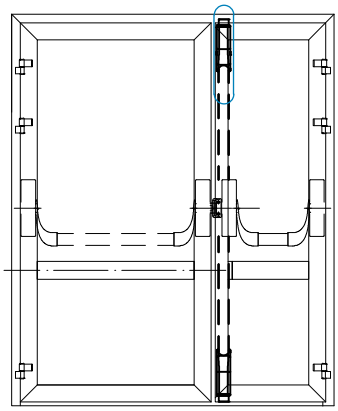

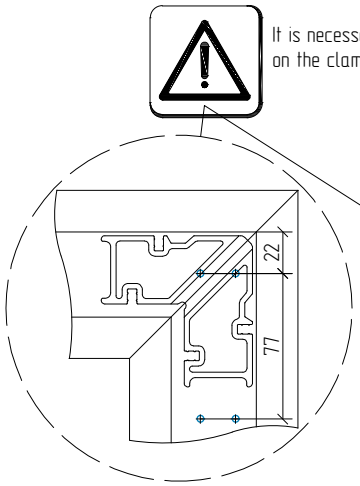

outward opening

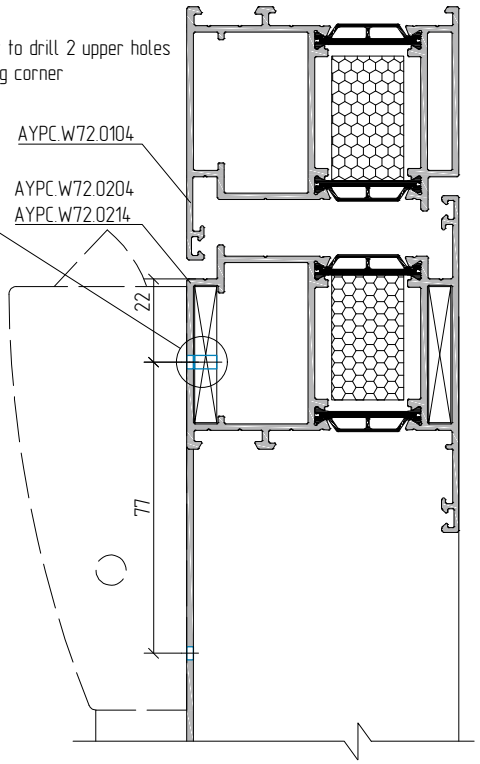

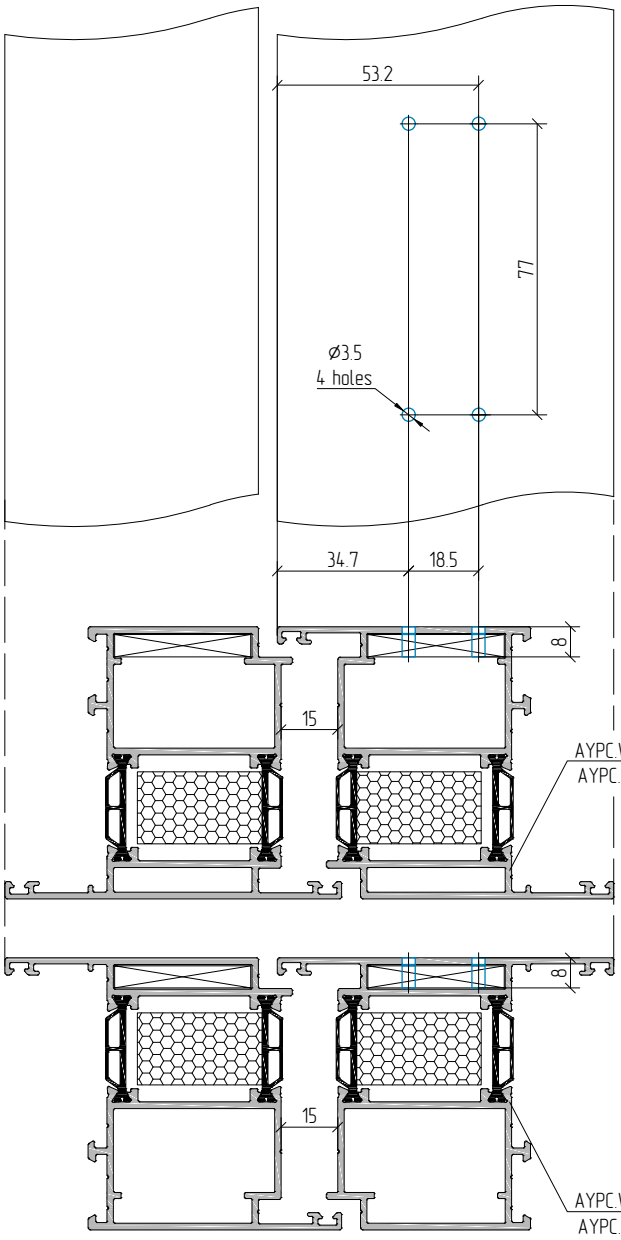

inward opening

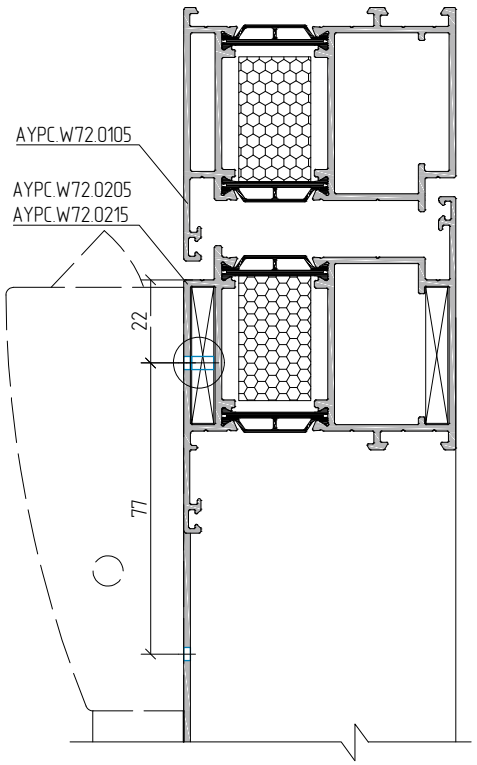

Machining of profiles for PHA2202 bottom clip kit installation on passive leaf

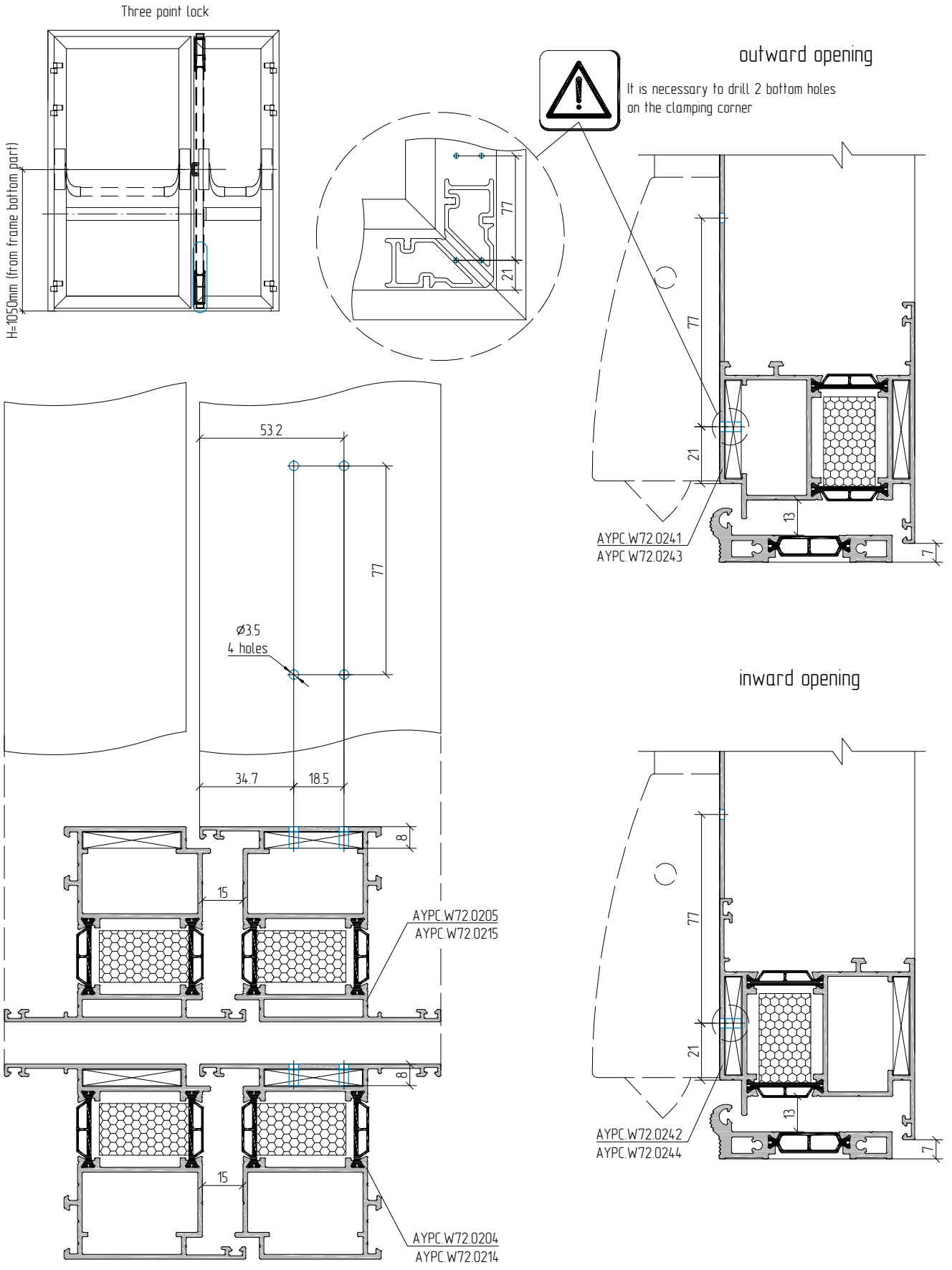

Machining of profiles for two point lock installation from PHA2202 kit on active and passive leaf

Five point lock

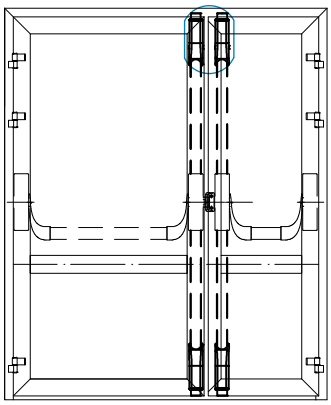

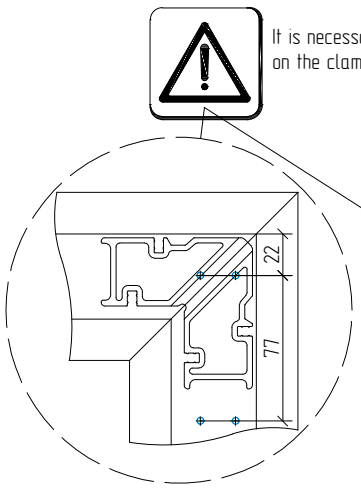

outward opening

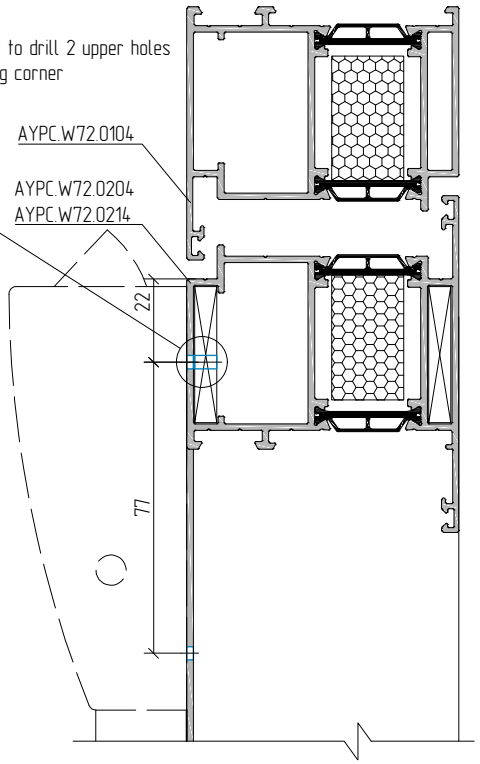

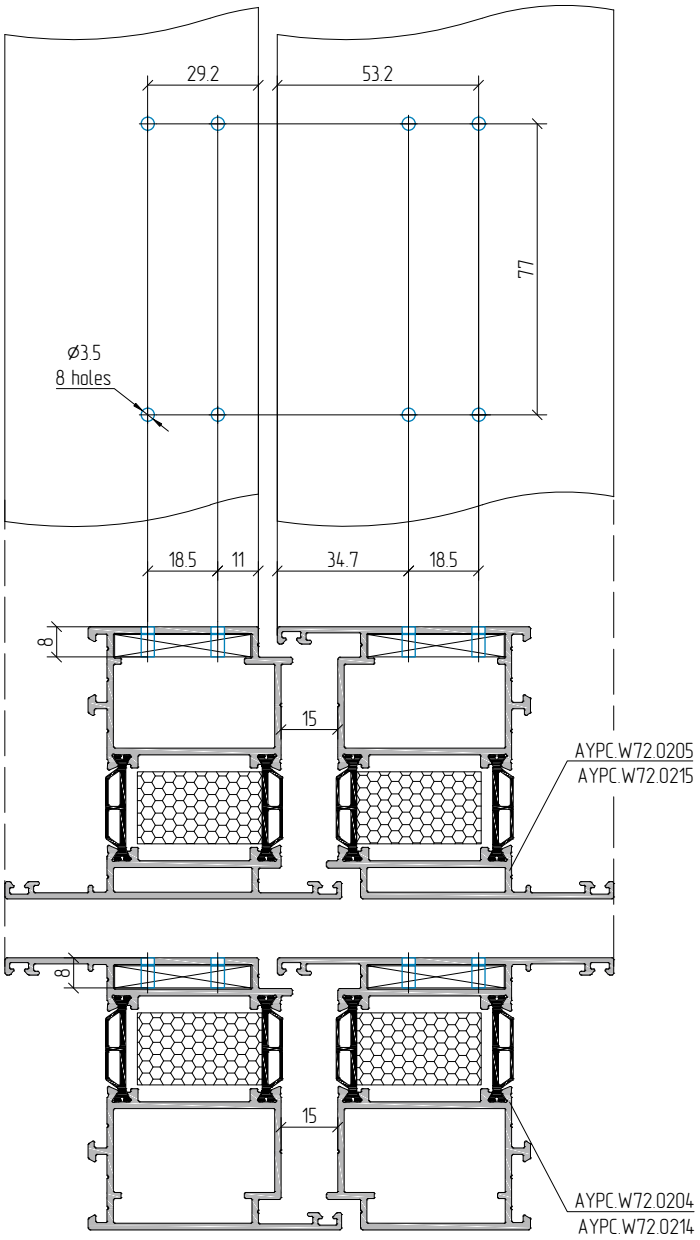

inward opening

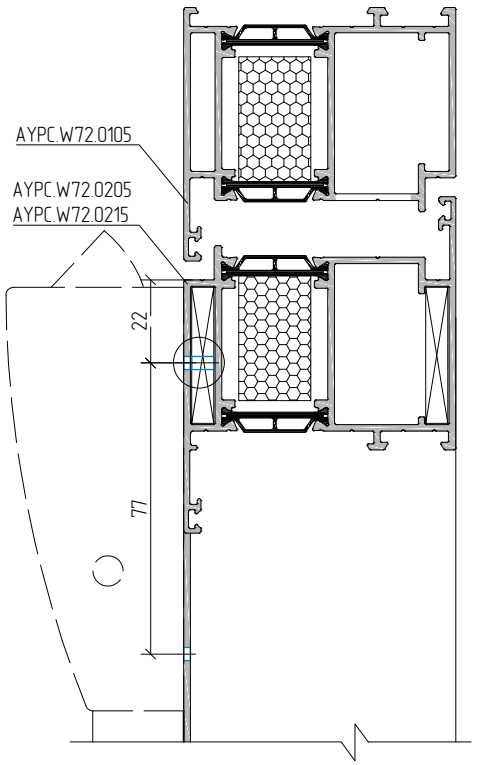

Machining of profiles for PHA2202 bottom clip kit installation on active and passive leaf

Five point lock

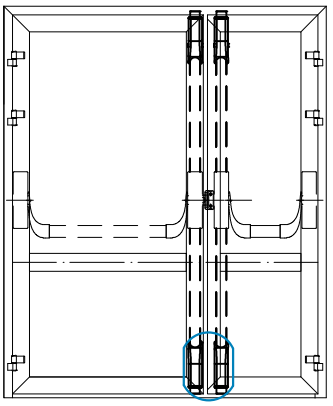

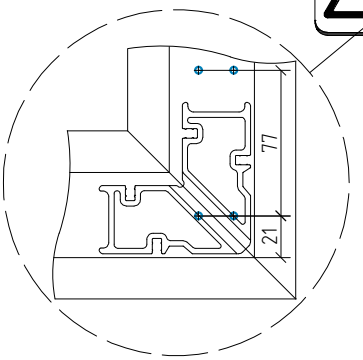

It is necessary to drill 2 bottom holes on the clamping corner

outward opening

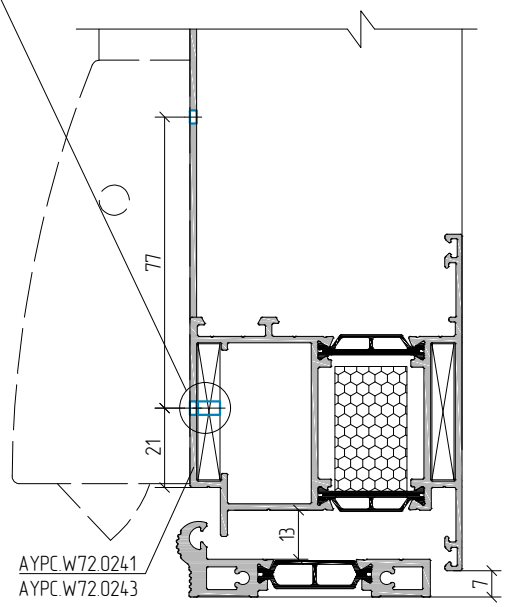

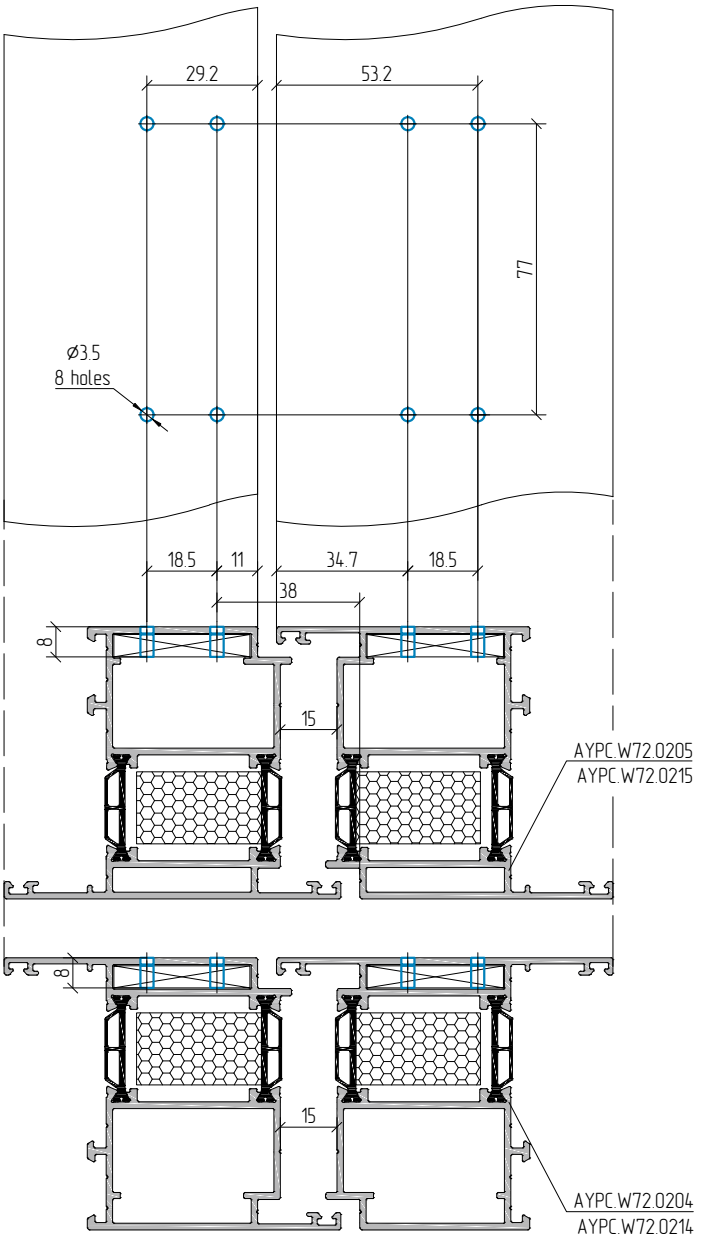

inward opening

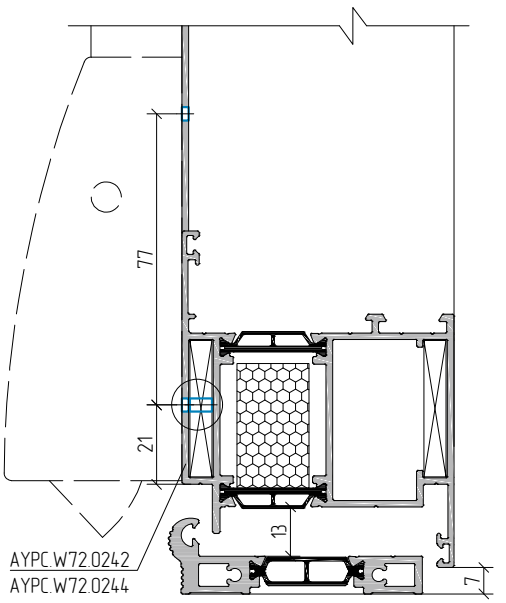

ALUTECH PROFILE SYSTEMS

Machining of frame profile for upper strike plate installation with parts from PHA2202 kit

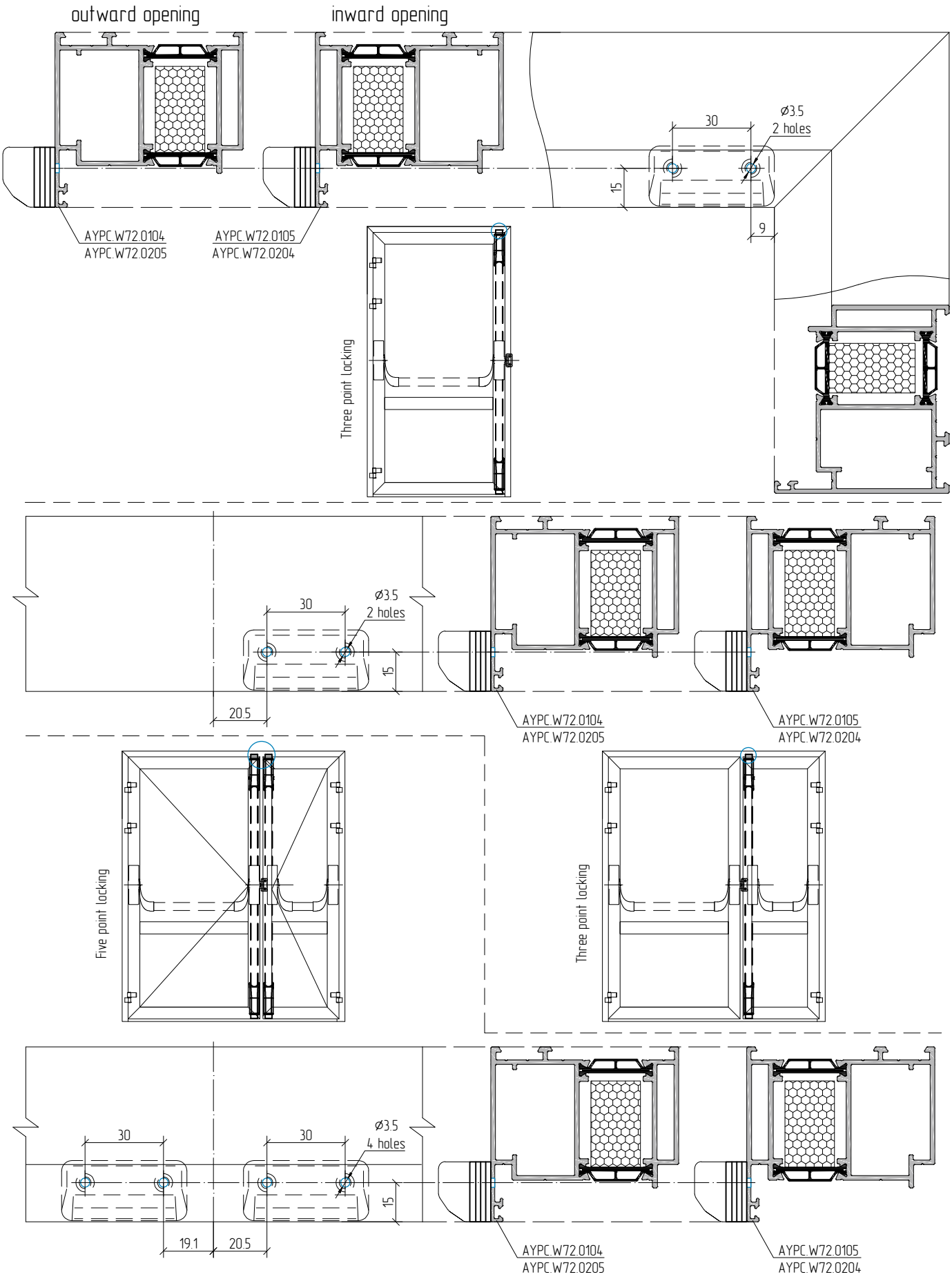

Installation of bottom strike plate form PHA2202 kit

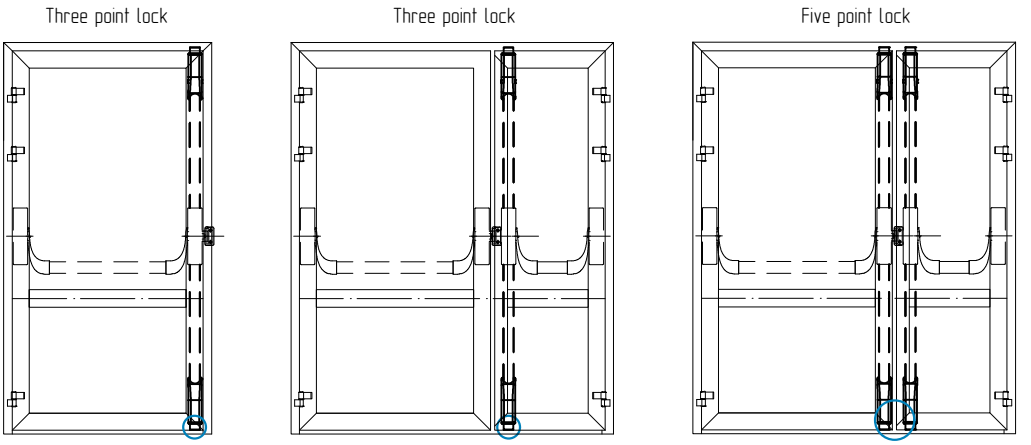

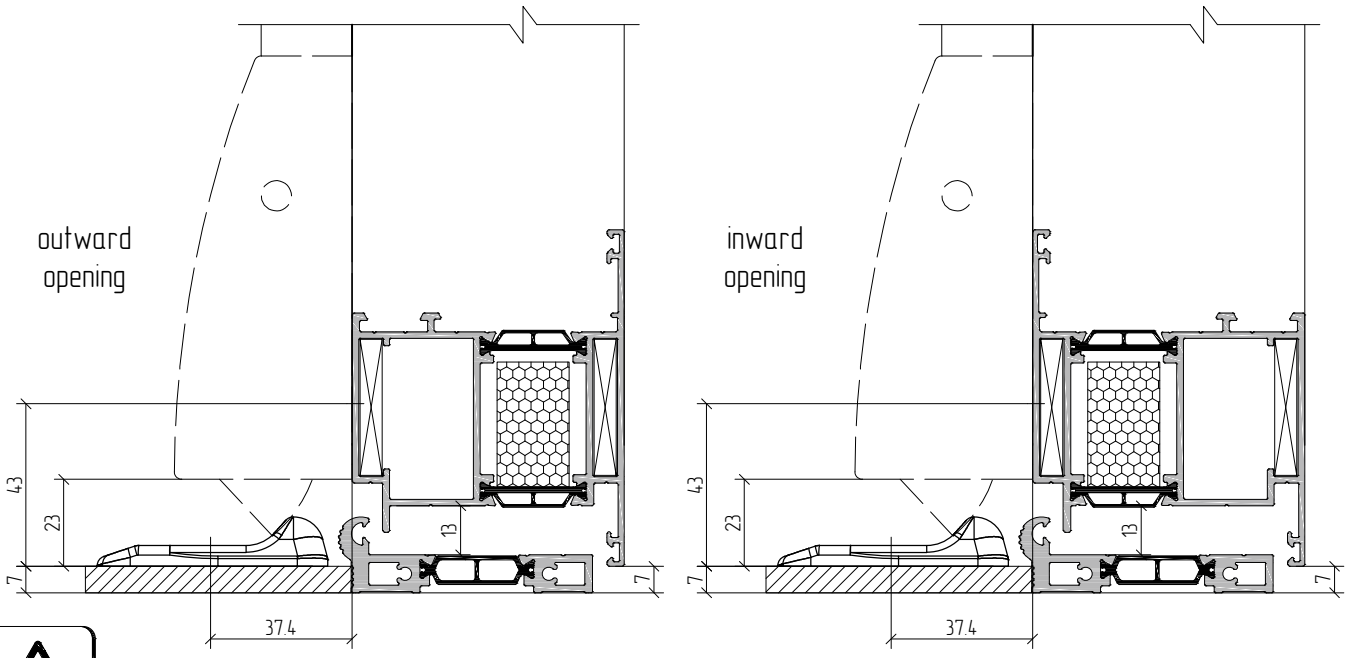

Install bottom strike plate from PHA2202 kit on site after door unit mounting

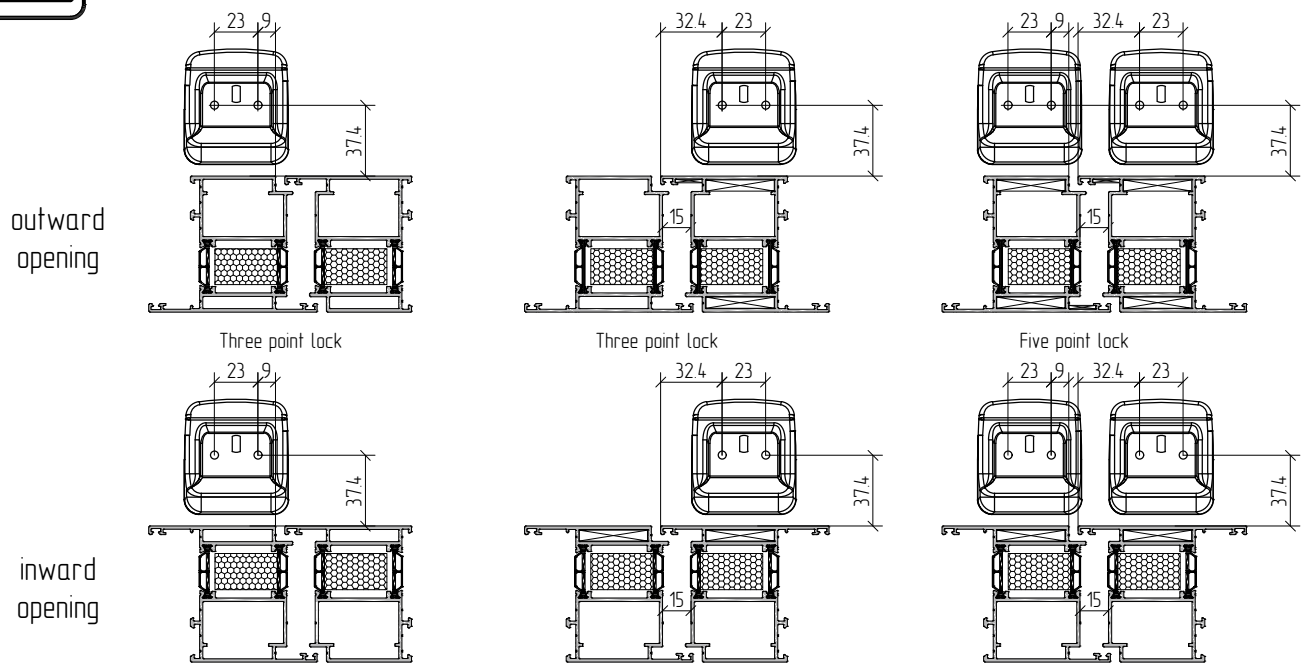

Hardware elements cutting from PHA2105 and PHX04 (PHX05) kits

Three point locking

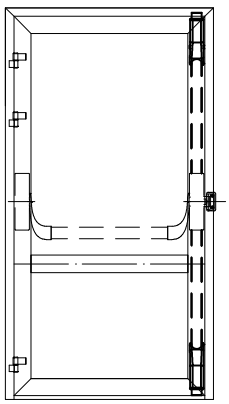

Three point locking

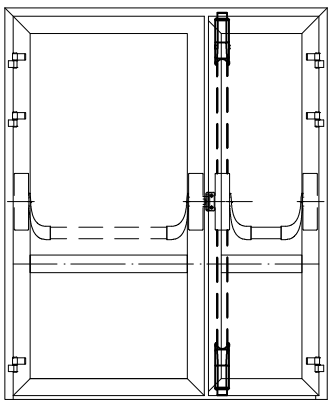

Five point locking

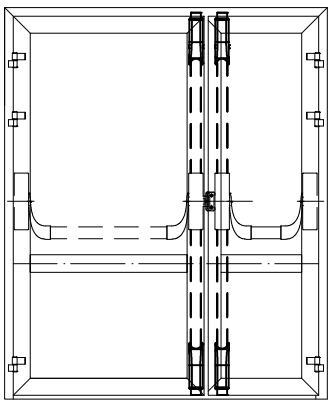

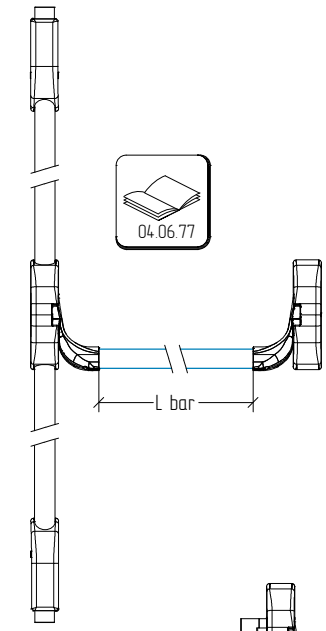

	Name	Calculation
"L" bar	PHA2105 push bar	L-142
"H" bottom element	PHX04(PHX05) connecting rod	H1+97
	PHX04(PHX05) cover	H1+10
"H" upper element	PHX04 (PHX05) connecting rod	H2+97
	PHX04 (PHX05) cover	H2+10

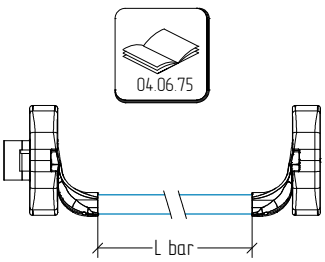

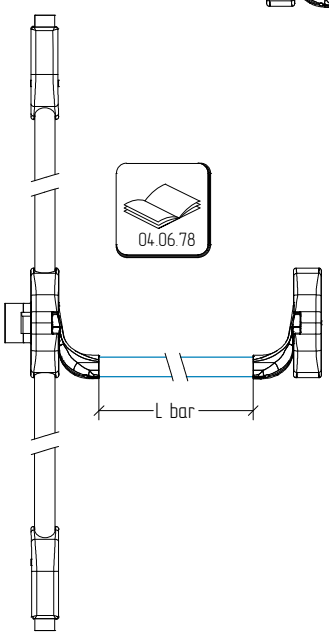

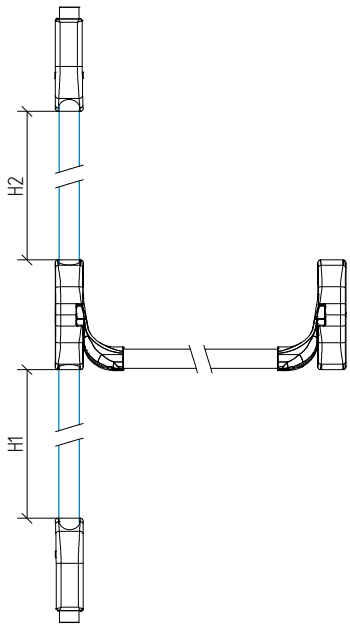

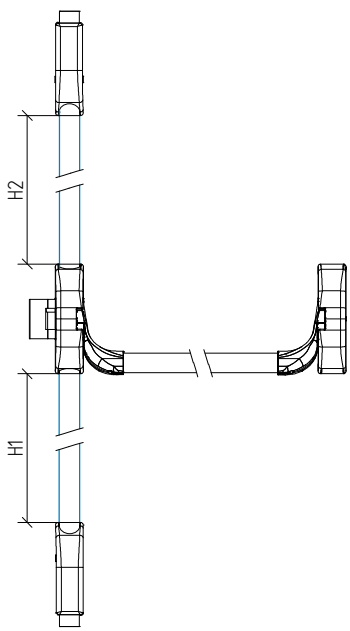

Leaf profile machining for PHT01 upper handle installation with 30/10 150F cylinder and PHTS105 extended spindle

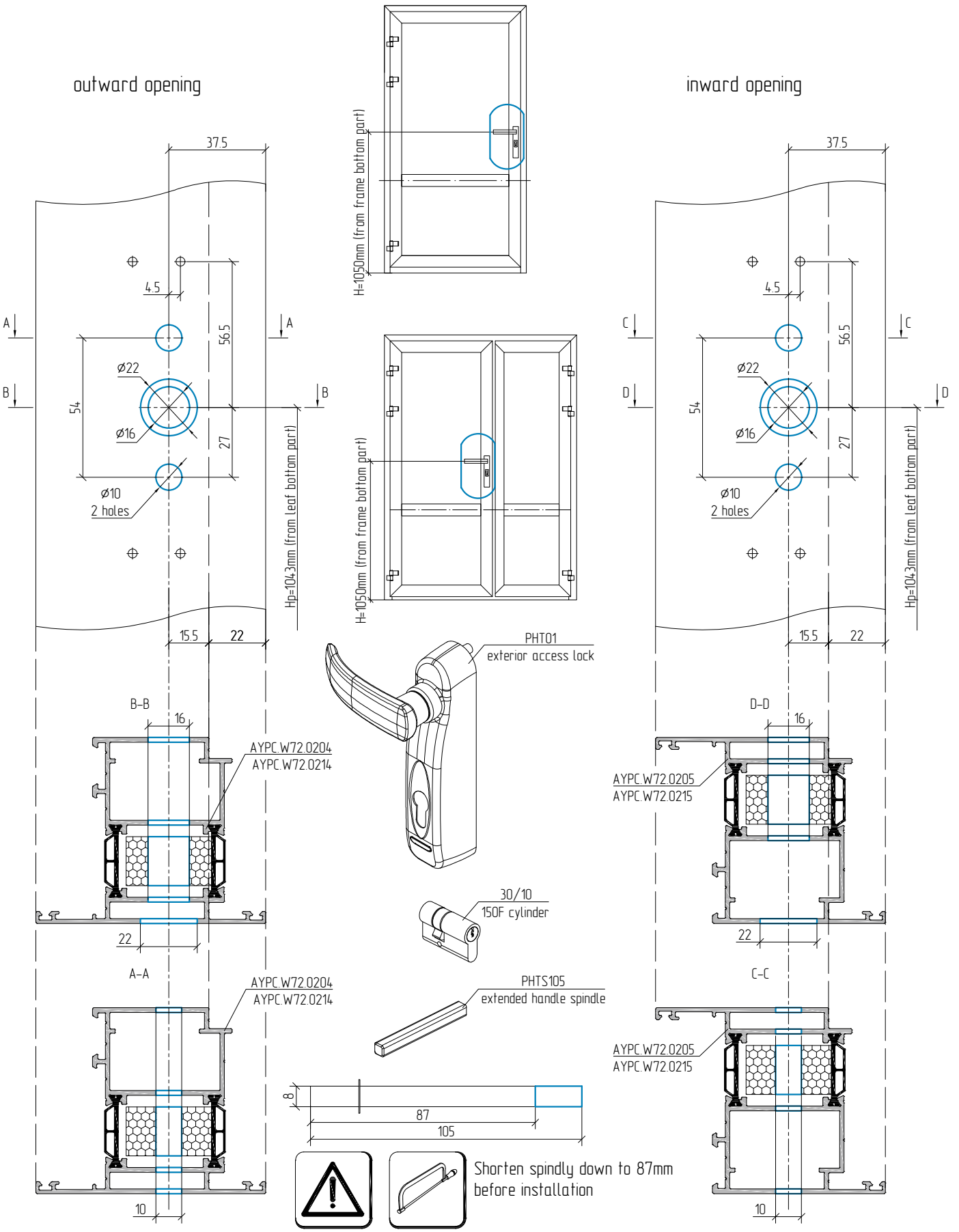

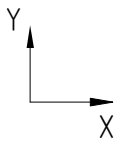

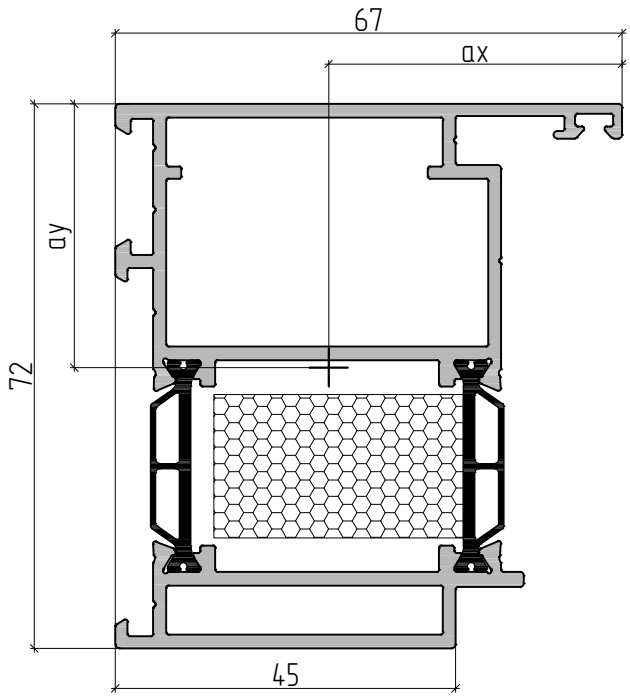

AYPC.W72.0104

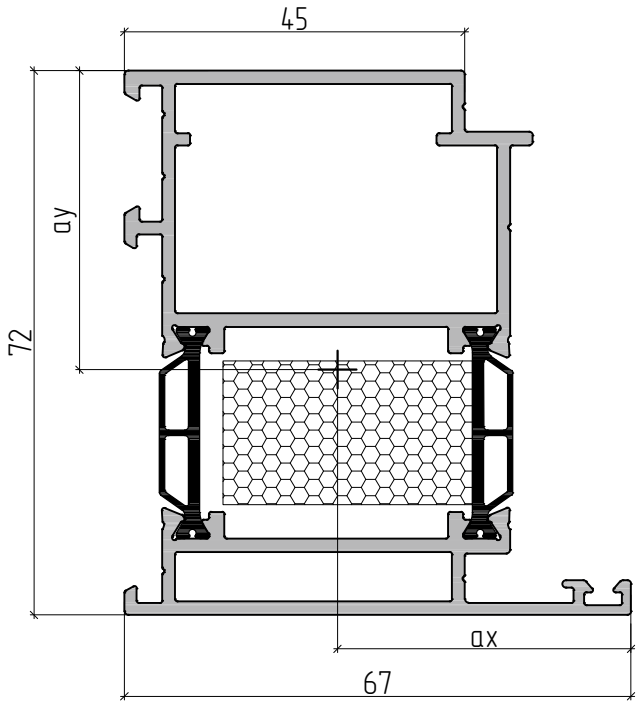

AYPC.W72.0105

Profile	m, kg/m	S, mm^2	Jx, cm^4	Wx, cm^3	ay, mm	Jy, cm^4	Wy, cm^3	ax, mm
AYPC.W72.0104	1.828	735.27	31.9	9.1	34.89	20.5	5.3	38.79
AYPC.W72.0105	1.826	734.66	31.4	7.9	39.57	20.5	5.3	38.82

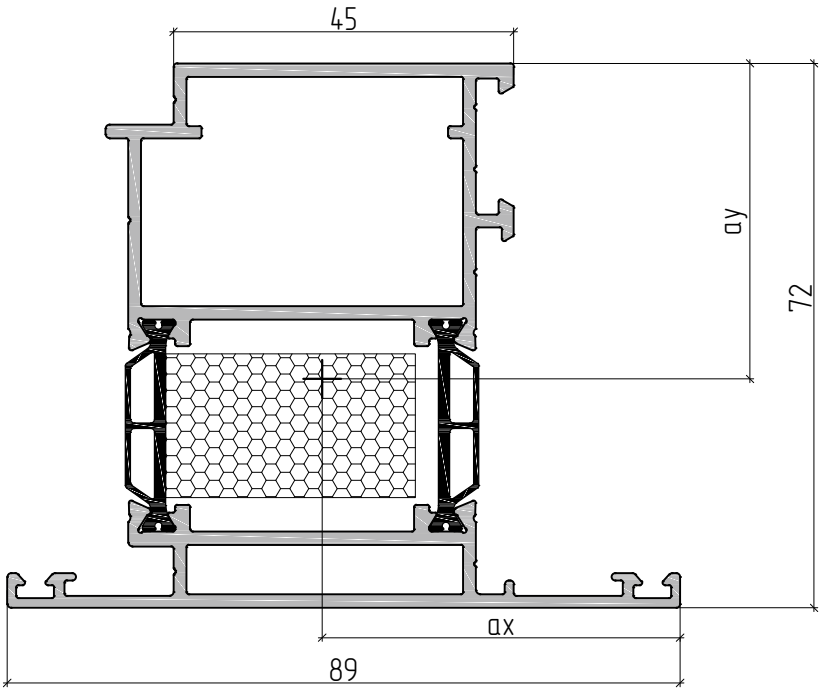

AYPC.W72.0204/AYPC.W72.0241

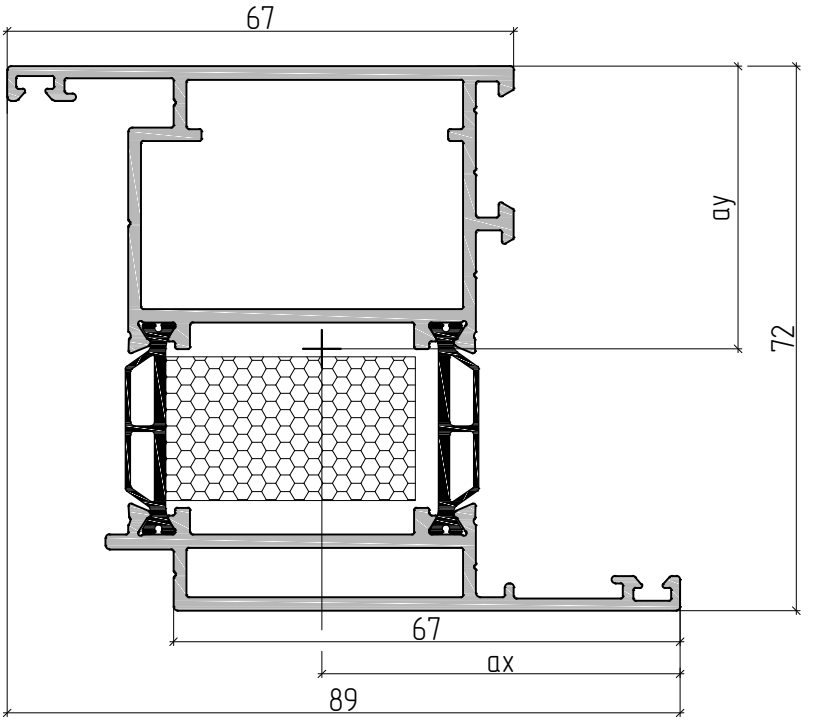

AYPC.W72.0205/AYPC.W72.0242

Profile	m, kg/m	S, mm^2	Jx, cm^4	Wx, cm^3	ay, mm	Jy, cm^4	Wy, cm^3	ax, mm
AYPC.W72.0204	1.949	780.1	34.4	7.3	47.13	27.6	5.8	47.35
AYPC.W72.0205	1.950	780.6	36.0	9.6	37.37	27.7	5.8	47.37
AYPC.W72.0241	1.968	787.2	35.0	9.55	36.64	28.30	7.51	37.68
AYPC.W72.0242	1.972	788.6	36.3	9.63	37.68	28.41	5.95	47.74

ALUTECH ALTW72
Windows and doors
with thermal break

AUTOMATIC THRESHOLDS

05.01.01 System description

05.02.01 Order information

05.03.01 Accessories

05.04.01 Sections and junctions

05.05.01 Examples of standard system calculation

05.06.01 Machining and assemblage

W72 door series
with automatic threshold

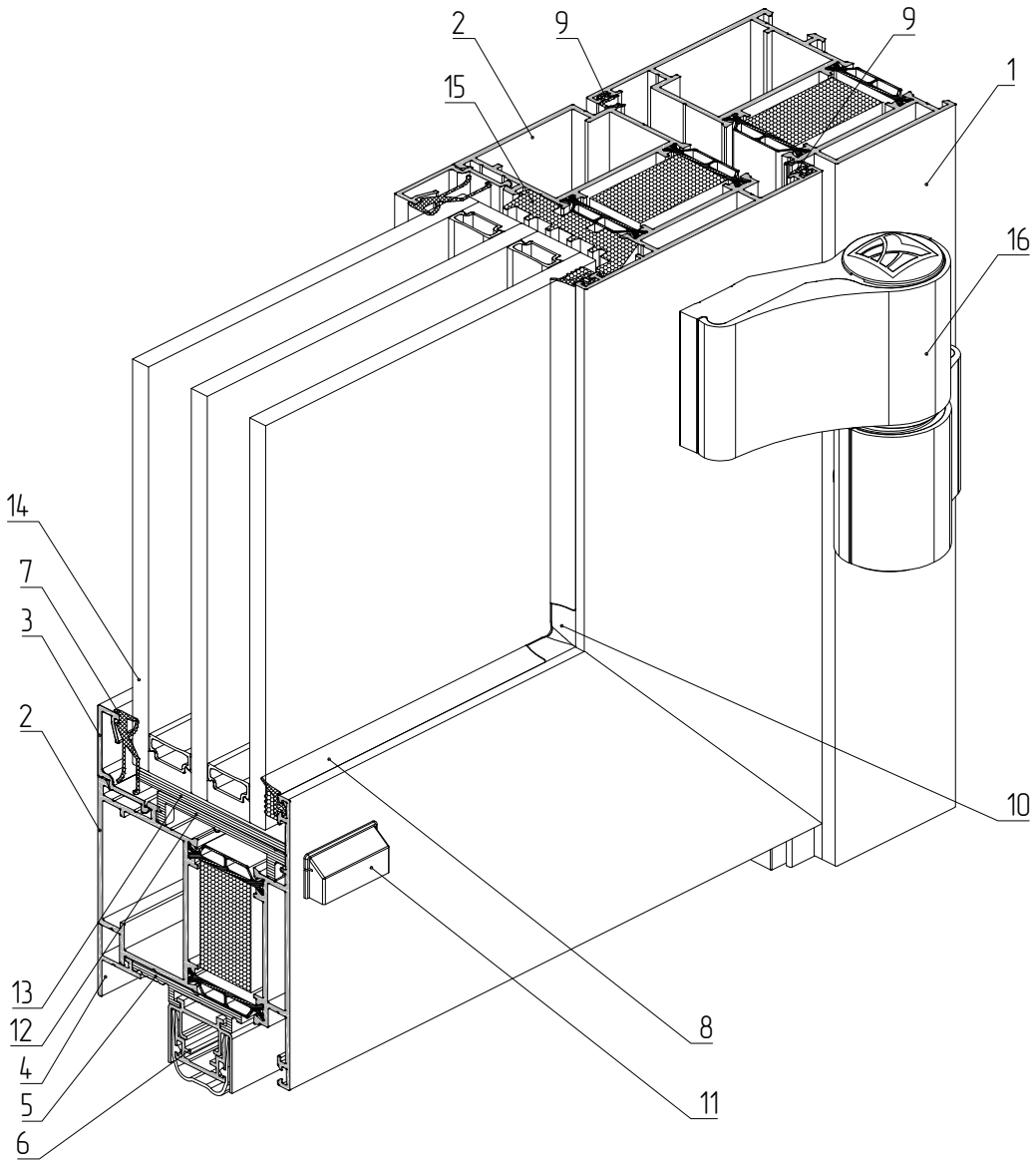

1 – AYPC.W72.0104 frame profile
2 – AYPC.W72.0204 leaf profile
3 – AYPC.C48.0602 glass bead profile
4 – AYPC.W62.0817 leaf adjoining profile
5 – FAPIM DA0581 AYPC.W62.0820 threshold adapter
6 – FAPIM DA0581 threshold profile
7 – FRK194 rubber gasket
8 – FRK197 rubber gasket
9 – FRK98 rubber gasket
10 – FRK179 rubber corner
11 – AYPC.C48.0919M-01 drain plug
12 – AYPC.W62.0917 bearing support
13 – 100x56x1 (100x56x3) leveling supports kit
14 – 50 mm infill unit
15 – AYPC.W72.0911 seam sealing
16 – 2AH67 door hinge

ORDER INFORMATION

Article	Name / Drawing	Weight, kg/m	Exterior perimeter, mm	Cross sectional area, mm^2	Code	Profile colour	Bar length, m	Quantity in pack		Weight of a pack	
								pcs	m	net, kg	gross, kg
AYPC.W62.0817	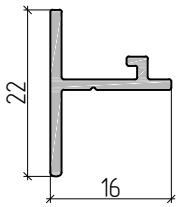	0.159	83.0	58.9	10806600 10806621 10806624 10806630 10806631 108066808	00 RAL 9016 RAL 8014 RAL 8017 RAL 9006 A00-D6	6.5	12	78	12.4	12.7

Image	Code	Article	Application
	10817300	AYPC.W62.0920	FAPIM DA0581 IGLOO threshold adapter (5.8 m)
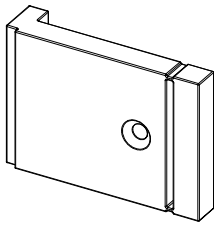	10817400	AYPC.W62.0921	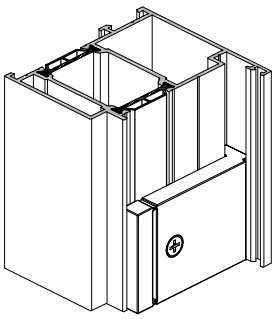 Automatic threshold stop. Quantity in pack – 60 pcs
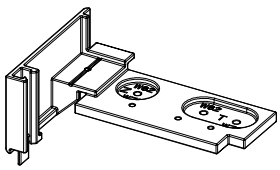	10817700	AYPC.W62.0923	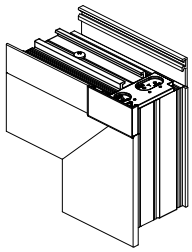 Leaf plug. Quantity in pack – 40 pcs
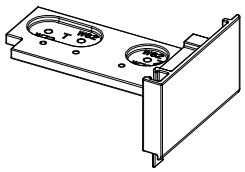	10817800	AYPC.W62.0923-01	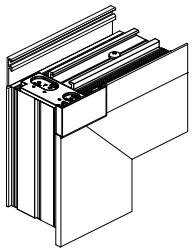 Leaf plug. Quantity in pack – 40 pcs
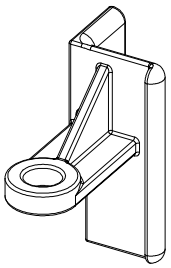	10817900	AYPC.W62.0924	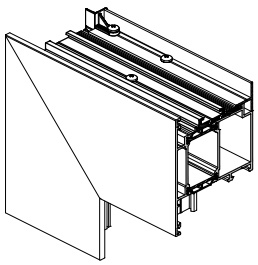 Adjoining profile plug. Quantity in pack – 100 pcs
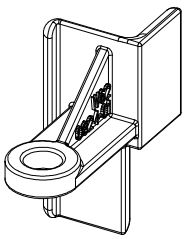	10818000	AYPC.W62.0924-01	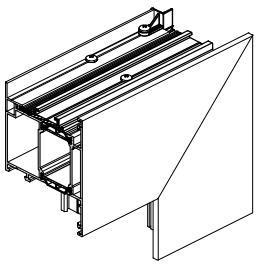 Adjoining profile plug. Quantity in pack – 100 pcs

Image	Code	Article	Application
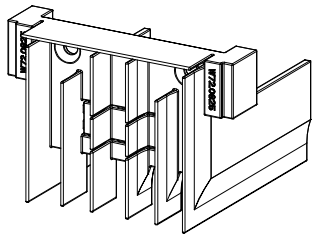	10918000	AYPC.W72.0925	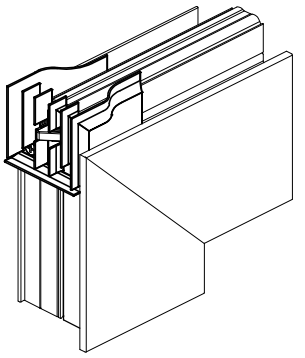 EPDM collar. Quantity in pack – 100 pcs
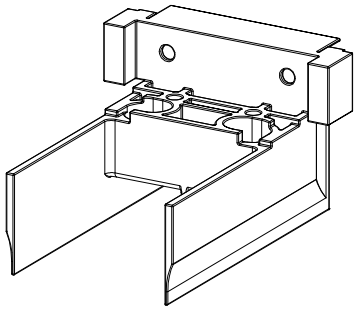	10918100	AYPC.W72.0926	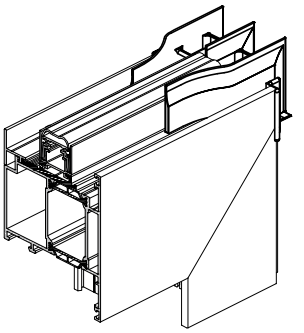 EPDM collar. Quantity in pack – 100 pcs

Image	Name	Code	Article	Colour
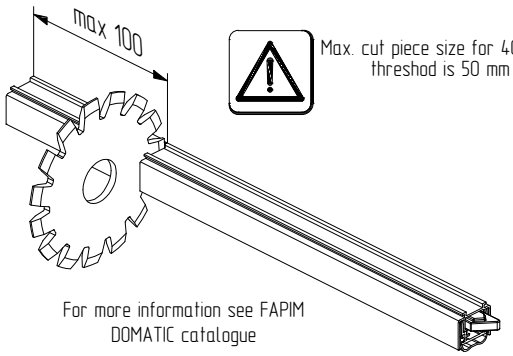 Max. cut piece size for 400 mm threshod is 50 mm 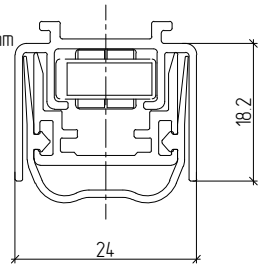 For more information see FAPIM DOMATIC catalogue	400 mmthreshold 600 mm threshold 700 mm threshold 800 mm threshold 900 mm threshold 1000 mm threshold 1100 mm threshold	13121400 13120900 13121000 13121100 13121200 13121300 13121600	DA0581040 DA0581060 DA0581070 DA0581080 DA0581090 DA0581100 DA0581110	00 00 00 00 00 00 –

ALUTECH PROFILE SYSTEMS

Standard outward opening door

Scale 1:2

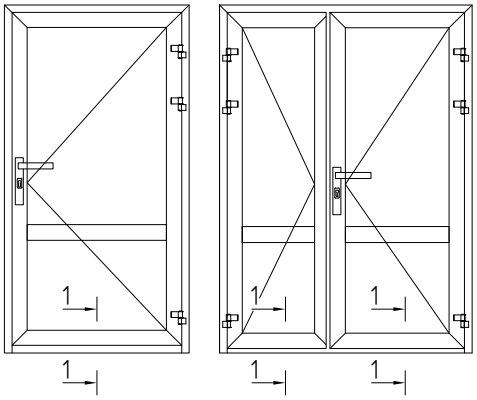

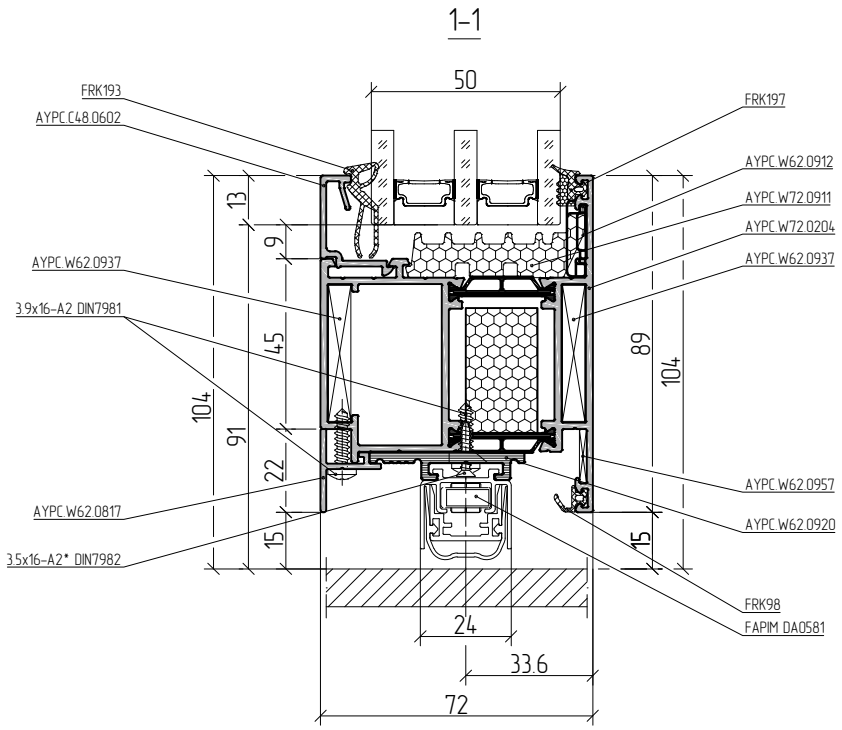

Door with basement profile. Outward opening

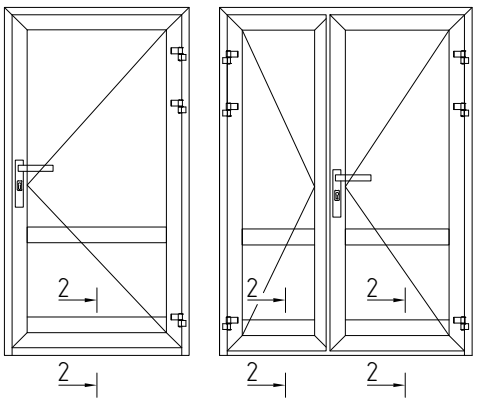

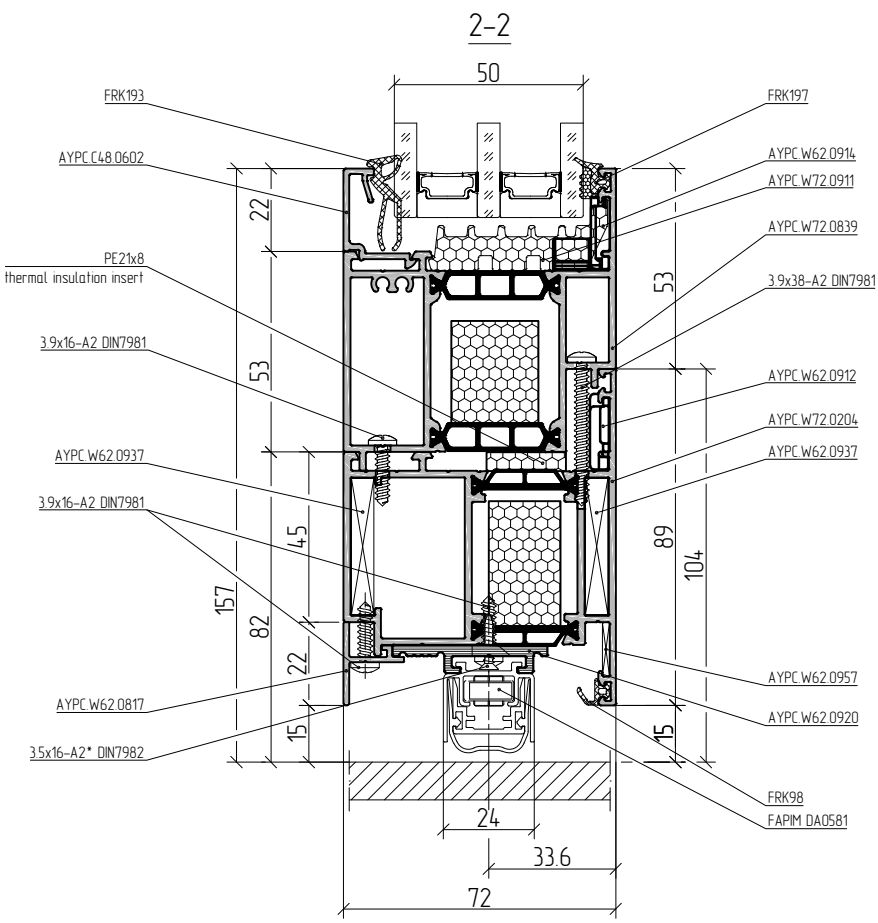

* Supplied together with FAPIM DA0581 threshold

Standard inward opening door

Scale 1:2

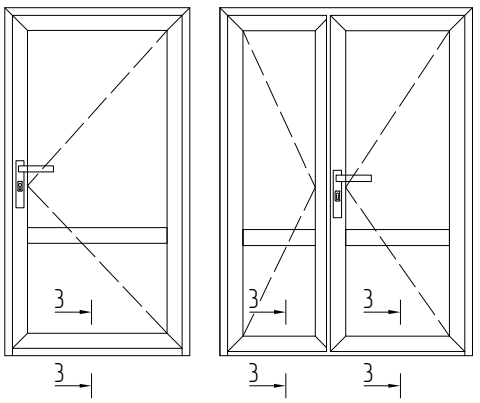

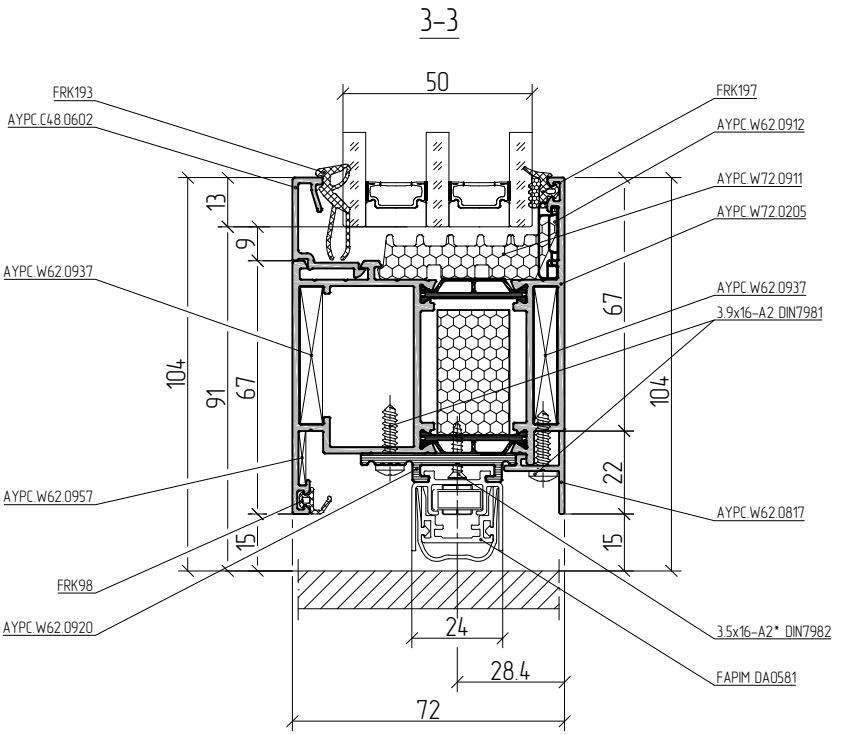

Door with basement profile. Inward opening

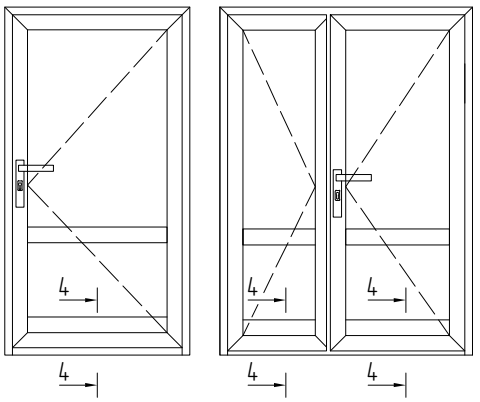

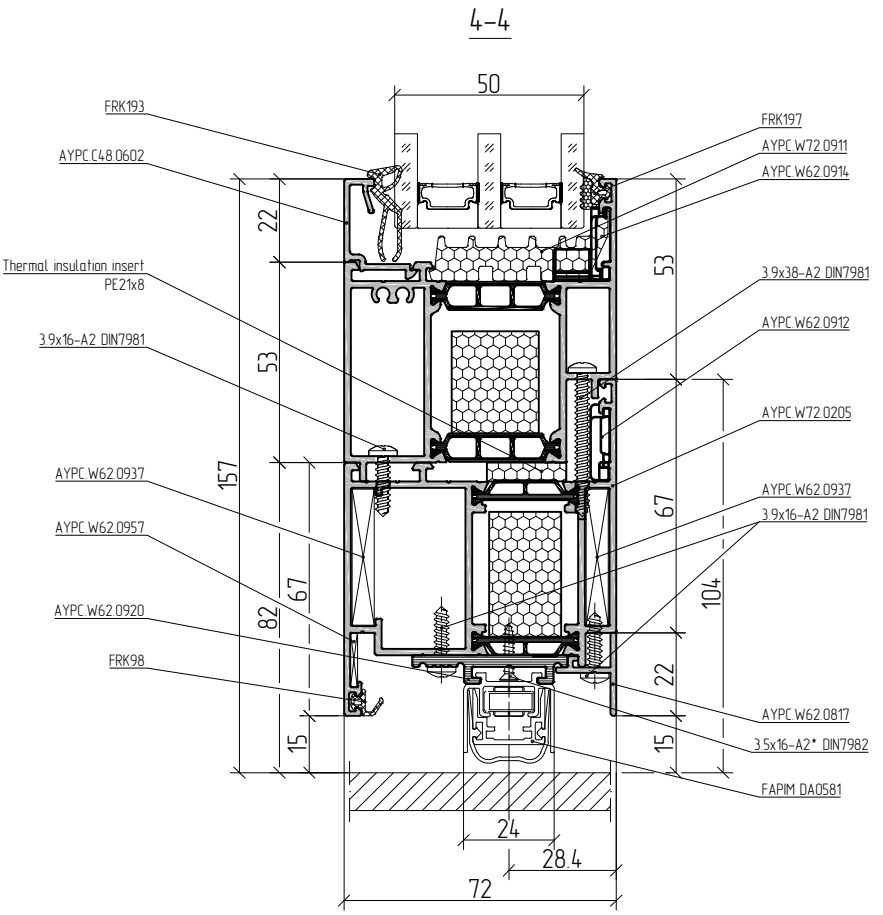

* Supplied together with FAPIM DA0581 threshold

ALUTECH PROFILE SYSTEMS

Standard outward opening door

Right (R) and left (L) opening

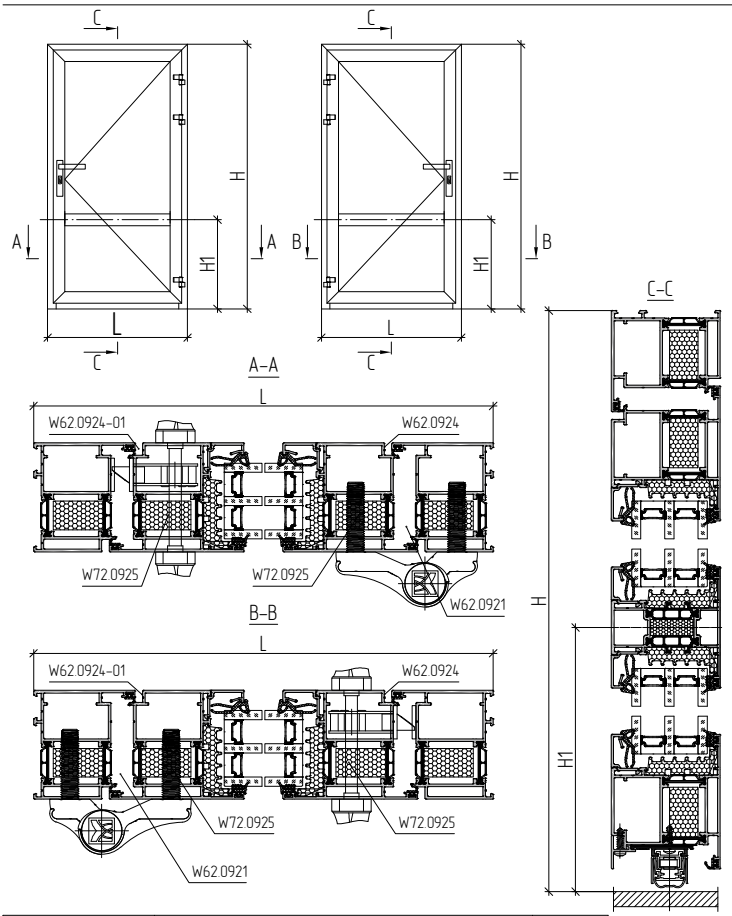

Specification

Article	Name Image	45°	L	1...
Profile				
AYPC.W72.0104	Frame profile		L	1
			H	1
			H	1
AYPC.W72.0204	Leaf profile		L–100	2
			H–65	2
AYPC.W72.0302	Transom bar profile		L–234	1
AYPC.W62.0817	Leaf adjoining profile		L–144	1
AYPC.C48.0602	Glass bead profile		L–234	4
			H–H1–179	2
			H1–144	2
AYPC.W62.0920	FAPIM DA0581 threshold adapter		L–132	1
FAPIM DA0581	Threshold profile		L–132	1

Article	Name Image	1...
Accessories		
AYPC.W62.0917	Bearing support	8
100x56x1(3)	Leveling support	8 (8)
AYPC.C48.0919M–01	Drain plug	4
AYPC.W62.0937	Clamping corner	12
AYPC.W62.0912	Plastic corner	4
Pin 5x10	Pin 5x10 DIN6325D	24
AYPC.W62.0913	Plastic corner	4
AYPC.W62.0957	Leveling corner	6
AYPC.W62.0973–01	Transom fixing element	2
AYPC.W62.0951–01	Transom fixing element	2
AYPC.W62.0916–01	Foamed insert	2
AYPC.W62.0921	Automatic threshold stop	1
AYPC.W62.0924	Adjoining profile plug	1
AYPC.W62.0924–01	Adjoining profile plug	1
AYPC.W72.0925	EPDM collar	2

Article	Name Image	L	1...
Gaskets			
FRK98	Rubber gasket	Lx2+Hx4–460	1
** FRK193	Rubber gasket	(A+B)x2+(A+B1)x2	1
** AYPC.W72.0911	Seam sealing	Ax4+Bx2+B1x2–8x100***	1
** FRK197	Rubber gasket	(A+B)x2+(A+B1)x2	1
** FRK179	Rubber corner		8
50 mm infill unit			
A=L–252; B=H–H1–153			1
A=L–252; B1=H1–118			1

Article	Name Image	1...
Fasteners		
3.9x13–A2 DIN7982	Self-tapping screw	5
3.9x13–A2 DIN7981	Self-tapping screw	2
3.9x16–A2 DIN7981	Self-tapping screw	(2xL–364)/300+2

1. Configuration shown in the specification table is identical for the right and left doors.
2. Select articles of glass bead profiles and gaskets depending on infill unit thickness (see section 01.04 – Table of glazing).
3. For profiles marked with * the subsequent machining is required (see the section 04.06 – Profiles machining and assemblage).

** Other accessories are possible (see the section 04.04 – Sections and junctions).

*** The quantity of removed AYPC.W72.0911 seam sealing depends on the type of opening and quantity of bearing supports

Standard outward opening door

Right (R) and left (L) opening

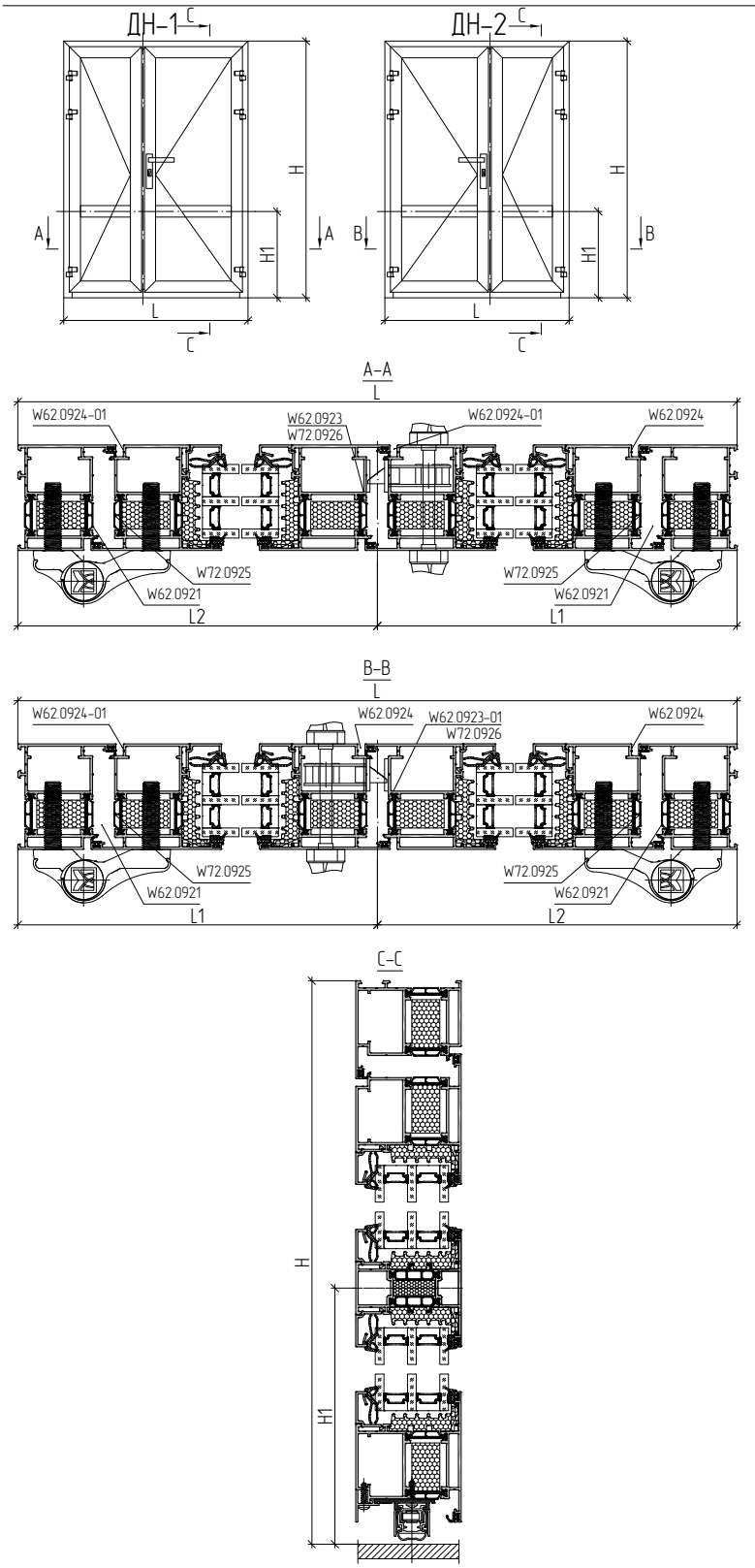

Specification

Article	Name Image	45°	L	1...
Profile				
AYPC.W72.0104	Frame profile		L	1
			H	1
			H	1
AYPC.W72.0204	Leaf profile		L1–41.5	2
			L2–41.5*	2
			H–65	3
AYPC.W72.0205	Leaf profile		H–65*	1
AYPC.W72.0302	Transom bar profile		L1–175.5	1
			L2–175.5	1
AYPC.W62.0817	Leaf adjoining profile		L1–85.5	1
			L2–102.5	1
AYPC.C48.0602	Glass bead profile		L1–175.5	4
			L2–175.5	2
			H1–144	2
			H–H1–179	2
AYPC.W62.0920	FAPIM DA0581 threshold adapter		L1–73.5	1
			L2–96.5	1
FAPIM DA0581	Threshold profile		L1–73.5	1
			L2–96.5	1

1. Configuration shown in the specification table is identical for the right and left doors.
2. Select articles of glass bead profiles and gaskets depending on infill unit thickness (see section 01.04 – Table of glazing).
3. For profiles marked with * the subsequent machining is required (see the section 04.06 – Profiles machining and assemblage).

** Other accessories are possible (see the section 04.04 – Sections and junctions).

*** The quantity of removed AYPC.W72.0911 seam sealing depends on the type of opening and quantity of bearing supports

ALUTECH PROFILE SYSTEMS

Standard outward opening door

Right (R) and left (L) opening

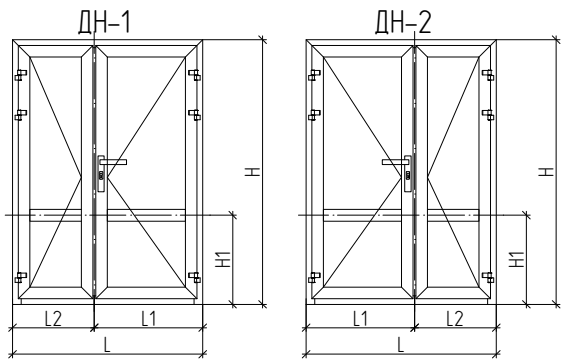

Article	Name	Image	L	1....
Gaskets				
FRK98	Rubber gasket		Lx2+Hx6–475	1
** FRK193	Rubber gasket		(A+A1+B+B1)x4	1
** AYPC.W72.0911	Seam sealing		(A1+A2+B1+B2)x4–16x100***	1
** FRK197	Rubber gasket		(A+A1+B+B1)x4	1
** FRK179	Rubber corner			16
50 mm infill unit				
A=L1–193; B=H–H1–153				1
A=L1–193; B1=H1–118				1
A1=L2–193; B=H–H1–153				1
A1=L2–193; B1=H1–118				1

Specification

Article	Name	Image	1....
Accessories			
AYPC.W62.0917	Bearing support		16
100x56x1(3)	Leveling support		16 (16)
AYPC.C48.0919M–01	Drain plug		8
AYPC.W62.0937	Clamping corner		20
AYPC.W62.0912	Plastic corner		8
Pin 5x10	Pin 5x10 DIN6325D		40
AYPC.W62.0913	Plastic corner		8
AYPC.W62.0957	Leveling corner		8
AYPC.W62.0973–01	Transom fixing element		4
AYPC.W62.0951–01	Transom fixing element		4
AYPC.W62.0916–01	Foamed insert		4
AYPC.W62.0921	Automatic threshold stop		2
AYPC.W72.0925	EPDM collar		3
AYPC.W72.0926	EPDM collar		1
Accessories for the door with the right active leaf Ext.door–1			
AYPC.C48.0906	Plug		2
AYPC.C48.0907	Plug		1
AYPC.W62.0924	Adjoining profile plug		1
AYPC.W62.0924–01	Adjoining profile plug		2
AYPC.W62.0923	Inactive leaf plug		1
Accessories for the door with the left active leaf Ext.door–2			
AYPC.C48.0906	Plug		1
AYPC.C48.0907	Plug		2
AYPC.W62.0924	Adjoining profile plug		2
AYPC.W62.0924–01	Adjoining profile plug		1
AYPC.W62.0923–01	Inactive leaf plug		1

Article	Name	Image	1....
Fasteners			
2.9x9.5–A2 DIN7982	Self–tapping screw		3
3.9x13–A2 DIN7982	Self–tapping screw		10
3.9x13–A2 DIN7981	Self–tapping screw		3
3.9x16–A2 DIN7981	Self–tapping screw		(2xL–560)/300+4
3.9x19–A2 DIN7981	Self–tapping screw		2

1. Configuration shown in the specification table is identical for the right and left doors.
2. Select articles of glass bead profiles and gaskets depending on infill unit thickness (see section 01.04 – Table of glazing).
3. For profiles marked with * the subsequent machining is required (see the section 04.06 – Profiles machining and assemblage).

** Other accessories are possible (see the section 04.04 – Sections and junctions).

*** The quantity of removed AYPC.W72.0911 seam sealing depends on the type of opening and quantity of bearing supports

Door with basement profile. Outward opening

Right (R) and left (L) opening

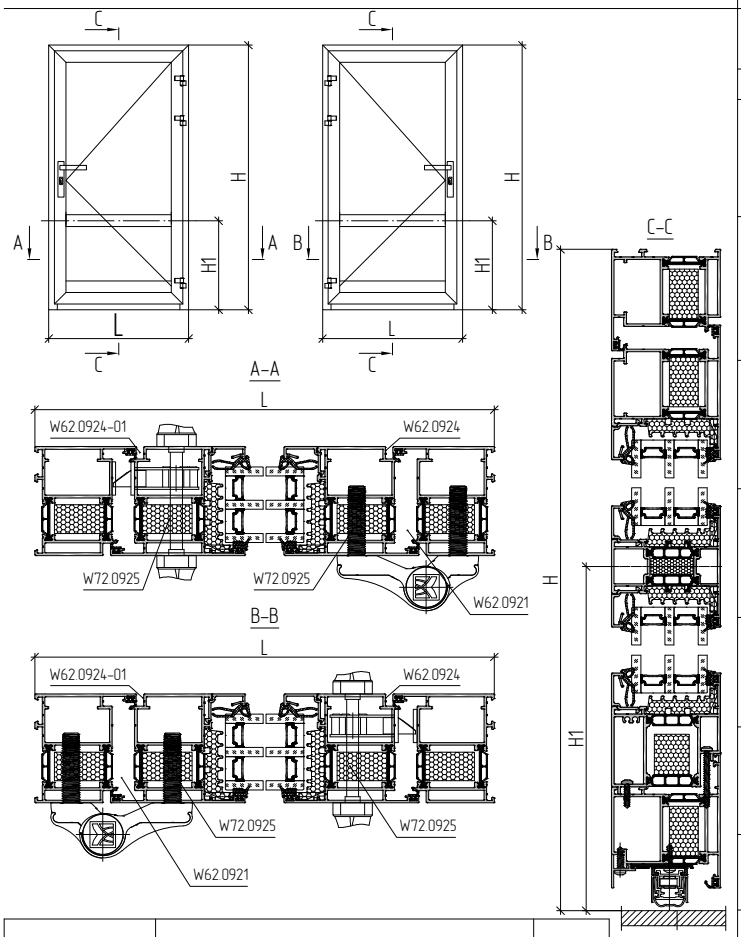

Article	Name Image	1....
	Accessories	
AYPC.W62.0917	Bearing support	8
100x56x1(3)	Leveling support	8 (8)
AYPC.C48.0919M–01	Drain plug	4
AYPC.W62.0937	Clamping corner	12
AYPC.W62.0912	Plastic corner	4
Pin 5x10	Pin 5x10 DIN6325D	24
AYPC.W62.0913	Plastic corner	4
AYPC.W62.0914	Corner plug kit	1
AYPC.W62.0957	Leveling corner	6
AYPC.W62.0973–01	Transom fixing element	2
AYPC.W62.0951–01	Transom fixing element	2
AYPC.W62.0916–01	Foamed insert	2
AYPC.W62.0921	Automatic threshold stop	1
AYPC.W62.0924	Adjoining profile plug	1
AYPC.W62.0924–01	Adjoining profile plug	1
AYPC.W72.0925	EPDM collar	2

Specification

Article	Name Image	45°	L	1....
	Profile			
AYPC.W72.0104	Frame profile		L	1
			H	1
			H	1
AYPC.W72.0204	Leaf profile		L–100	2
			H–65	2
AYPC.W72.0302	Transom bar profile		L–234	1
AYPC.W72.0839	Basement profile		L–234	1
AYPC.W62.0817	Leaf adjoining profile		L–144	1
AYPC.C48.0602	Glass bead profile		L–234	4
			H–H1–179	2
			H1–144	2
AYPC.W62.0920	FAPIM DA0581 threshold adapter		L–132	1
FAPIM DA0581	Threshold profile		L–132	1

Article	Name Image	L	1....
	Gaskets		
FRK98	Rubber gasket	Lx2+Hx4–460	1
** FRK193	Rubber gasket	(A+B)x2+(A+B1)x2	1
** AYPC.W72.0911	Seam sealing	Ax4+Bx2+B1x2–8x100***	1
** FRK197	Rubber gasket	(A+B)x2+(A+B1)x2	1
** FRK179	Rubber corner		8
PE21x8	Thermal insulation insert	L–234	1
	50 mm infill unit		
	A=L–252; B=H–H1–153		1
	A=L–252; B1=H1–171		1

Article	Name Image	1....
	Fasteners	
3.9x13–A2 DIN7982	Self-tapping screw	5
3.9x13–A2 DIN7981	Self-tapping screw	2
3.9x16–A2 DIN7981	Self-tapping screw	(3xL–684)/300+6
3.9x38–A2 DIN7981	Self-tapping screw	(L–234)/300

1. Configuration shown in the specification table is identical for the right and left doors.
2. Select articles of glass bead profiles and gaskets depending on infill unit thickness (see section 01.04 – Table of glazing).
3. For profiles marked with * the subsequent machining is required (see the section 04.06 – Profiles machining and assemblage).

** Other accessories are possible (see the section 04.04 – Sections and junctions).

*** The quantity of removed AYPC.W72.0911 seam sealing depends on the type of opening and quantity of bearing supports

Door with basement profile. Outward opening

Right (R) and left (L) opening

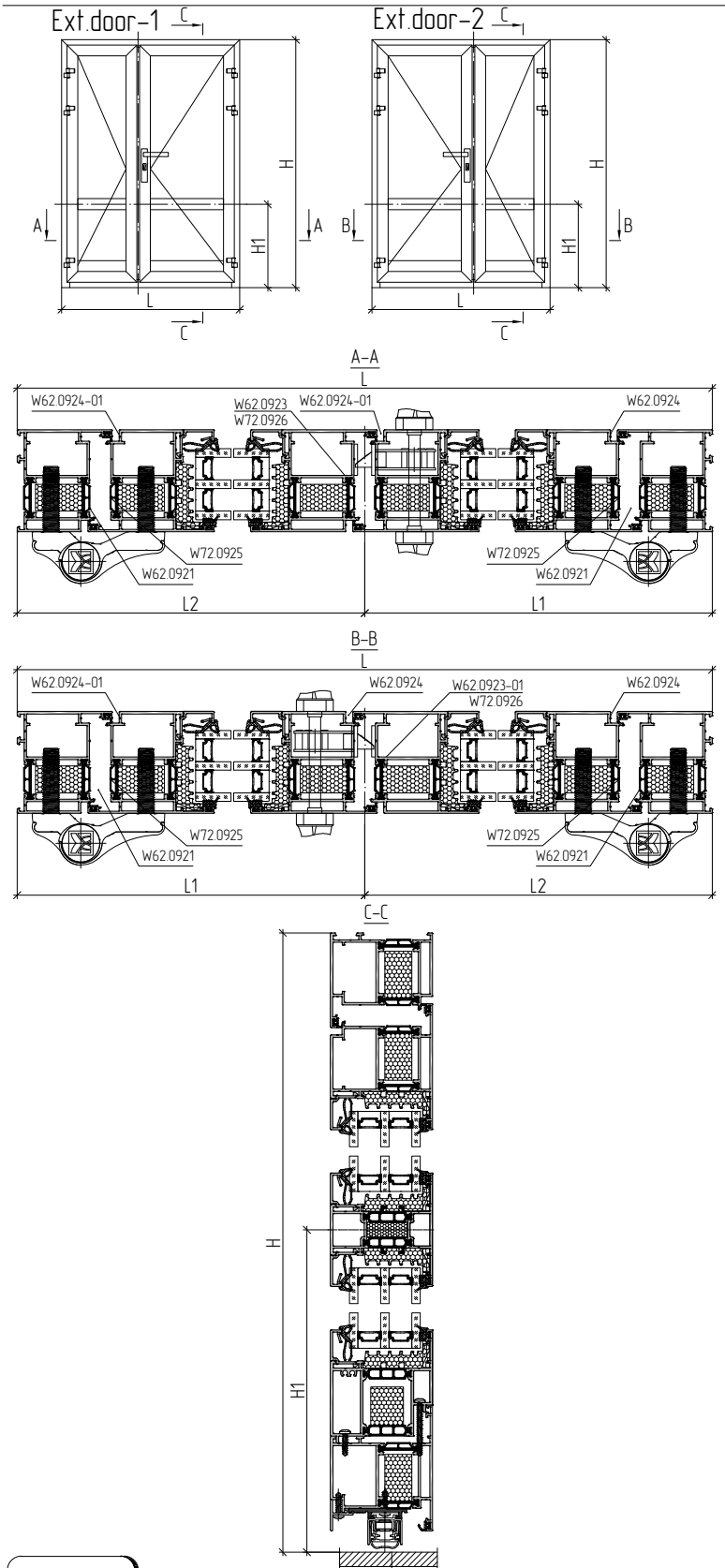

Specification

Article	Name Image			1...
	Profile			
AYPC.W72.0104	Frame profile		L	1
			H	1
			H	1
AYPC.W72.0204	Leaf profile		L1–41.5	2
			L2–41.5*	2
			H–65	3
AYPC.W72.0205	Leaf profile		H–65*	1
AYPC.W72.0302	Transom bar profile		L1–175.5	1
			L2–175.5	1
AYPC.W72.0839	Basement profile		L1–175.5	1
			L2–175.5	1
AYPC.W62.0817	Leaf adjoining profile		L1–85.5	1
			L2–102.5	1
AYPC.C48.0602	Glass bead profile		L1–175.5	4
			L2–175.5	2
			H1–144	2
			H1–179	4
AYPC.W62.0920	FAPIM DA0581 threshold adapter		L1–73.5	1
			L2–96.5	1
FAPIM DA0581	Threshold profile		L1–73.5	1
			L2–96.5	1

1. Configuration shown in the specification table is identical for the right and left doors.
2. Select articles of glass bead profiles and gaskets depending on infill unit thickness (see section 01.04 – Table of glazing).
3. For profiles marked with * the subsequent machining is required (see the section 04.06 – Profiles machining and assemblage).

** Other accessories are possible (see the section 04.04 – Sections and junctions).

*** The quantity of removed AYPC.W72.0911 seam sealing depends on the type of opening and quantity of bearing supports

Door with basement profile. Outward opening

Right (R) and left (L) opening

Ext.door-1

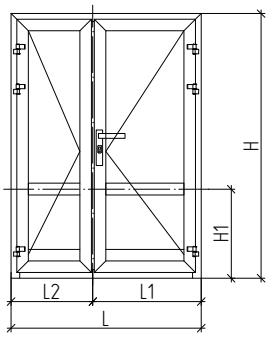

Ext.door-2

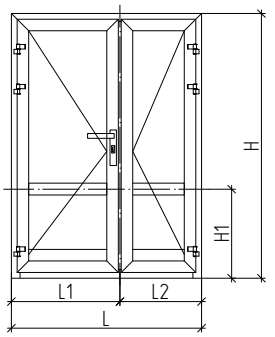

Article	Name	Image	L	1....
Gaskets				
FRK98	Rubber gasket		Lx2+Hx6-475	1
** FRK193	Rubber gasket		(A+A1+B+B1)x4	1
** AYPC.W72.0911	Seam sealing		(A1+A2+B1+B2)x4-16x100***	1
** FRK197	Rubber gasket		(A+A1+B+B1)x4	1
** FRK179	Rubber corner			16
50 mm infill unit				
A=L1-193; B=H-H1-153				1
A=L1-193; B1=H1-171				1
A1=L2-193; B=H-H1-153				1
A1=L2-193; B1=H1-171				1

Specification

Article	Name	Image	1....
Accessories			
AYPC.W62.0917	Bearing support		16
100x56x1(3)	Leveling support		16 (16)
AYPC.C48.0919M-01	Drain plug		8
AYPC.W62.0937	Clamping corner		20
AYPC.W62.0912	Plastic corner		8
Pin 5x10	Pin 5x10 DIN6325D		40
AYPC.W62.0913	Plastic corner		8
AYPC.W62.0914	Corner plug kit		2
AYPC.W62.0957	Leveling corner		8
AYPC.W62.0973-01	Transom fixing element		4
AYPC.W62.0951-01	Transom fixing element		4
AYPC.W62.0916-01	Foamed insert		4
AYPC.W62.0921	Automatic threshold stop		2
AYPC.W72.0925	EPDM collar		3
AYPC.W72.0926	EPDM collar		1
Accessories for the door with the right active leaf Ext.door-1			
AYPC.C48.0906	Plug		2
AYPC.C48.0907	Plug		1
AYPC.W62.0924	Adjoining profile plug		1
AYPC.W62.0924-01	Adjoining profile plug		2
AYPC.W62.0923	Inactive leaf plug		1
Accessories for the door with the left active leaf Ext.door-2			
AYPC.C48.0906	Plug		1
AYPC.C48.0907	Plug		2
AYPC.W62.0924	Adjoining profile plug		2
AYPC.W62.0924-01	Adjoining profile plug		1
AYPC.W62.0923-01	Inactive leaf plug		1

Article	Name	Image	1....
Fasteners			
2.9x9.5-A2 DIN7982	Self-tapping screw		3
3.9x13-A2 DIN7982	Self-tapping screw		10
3.9x13-A2 DIN7981	Self-tapping screw		3
3.9x16-A2 DIN7981	Self-tapping screw		(2xL-450)/300+(L-234)/300+6
3.9x19-A2 DIN7981	Self-tapping screw		2
3.9x38-A2 DIN7981	Self-tapping screw		(L-234)/300

1. Configuration shown in the specification table is identical for the right and left doors.
2. Select articles of glass bead profiles and gaskets depending on infill unit thickness (see section 01.04 – Table of glazing).
3. For profiles marked with * the subsequent machining is required (see the section 04.06 – Profiles machining and assemblage).

** Other accessories are possible (see the section 04.04 – Sections and junctions).

*** The quantity of removed AYPC.W72.0911 seam sealing depends on the type of opening and quantity of bearing supports

ALUTECH PROFILE SYSTEMS

Standard inward opening door

Left (L) and right (R) opening

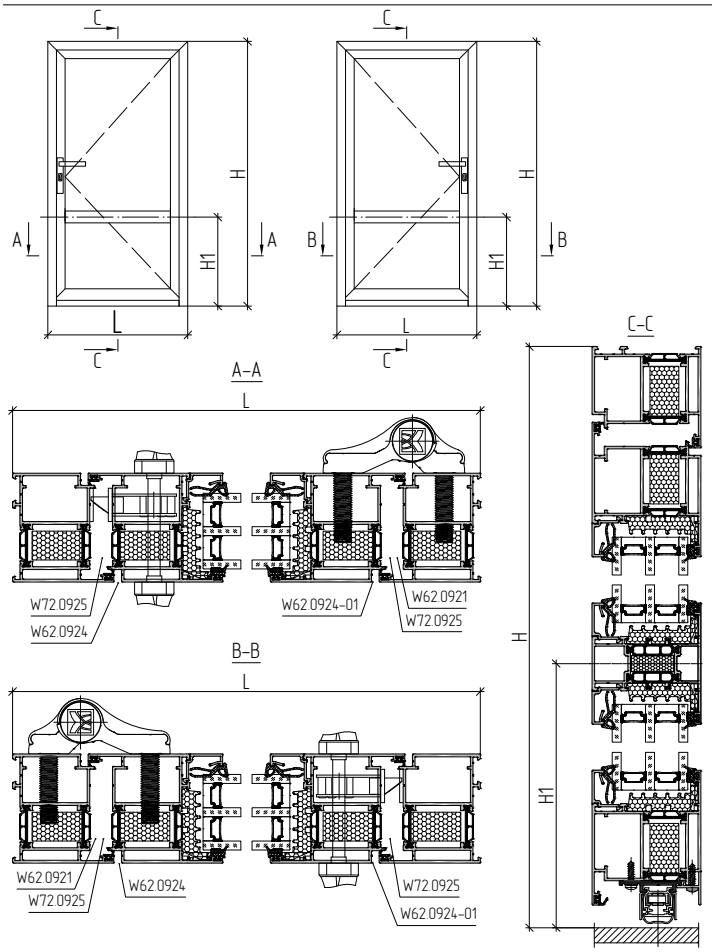

Specification

Article	Name Image	45°	L	1....
Profile				
AYPC.W72.0105	Frame profile		L	1
			H	1
			H	1
AYPC.W72.0205	Leaf profile		L–100	1
			H–65	2
AYPC.W72.0302	Transom bar profile		L–234	1
AYPC.W62.0817	Leaf adjoining profile		L–144	1
AYPC.C48.0602	Glass bead profile		L–234	4
			H–H1–179	2
			H1–144	2
AYPC.W62.0920	Threshold adapter FAPIM DA0581		L–132	1
FAPIM DA0581	Threshold profile		L–132	1

Article	Name Image	1....
Accessories		
AYPC.W62.0917	Bearing support	8
100x56x1(3)	Leveling support	8 (8)
AYPC.C48.0919M–01	Drain plug	4
AYPC.W62.0937	Clamping corner	12
AYPC.W62.0912	Plastic corner	4
Pin 5x10	Pin 5x10 DIN6325D	24
AYPC.W62.0913	Plastic corner	4
AYPC.W62.0957	Leveling corner	6
AYPC.W62.0973–01	Transom fixing element	2
AYPC.W62.0951–01	Transom fixing element	2
AYPC.W62.0916–01	Foamed insert	2
AYPC.W62.0921	Automatic threshold stop	1
AYPC.W62.0924	Adjoining profile plug	1
AYPC.W62.0924–01	Adjoining profile plug	1
AYPC.W72.0925	EPDM collar	2

Article	Name Image	L	1....
Gaskets			
FRK98	Rubber gasket	Lx2+Hx4–460	1
** FRK193	Rubber gasket	(A+B)x2+(A+B1)x2	1
** AYPC.W72.0911	Seam sealing	Ax4+Bx2+B1x2–8x100***	1
** FRK197	Rubber gasket	(A+B)x2+(A+B1)x2	1
** FRK179	Rubber corner		8
50 mm infill unit			
A=L–252; B=H–H1–153			1
A=L–252; B1=H1–118			1

Article	Name Image	1....
Fasteners		
3.9x13–A2 DIN7982	Self-tapping screw	5
3.9x13–A2 DIN7981	Self-tapping screw	2
3.9x16–A2 DIN7981	Self-tapping screw	(2xL–364)/300+2

1. Configuration shown in the specification table is identical for the right and left doors.
2. Select articles of glass bead profiles and gaskets depending on infill unit thickness (see section 01.04 – Table of glazing).
3. For profiles marked with * the subsequent machining is required (see the section 04.06 – Profiles machining and assemblage).

** Other accessories are possible (see the section 04.04 – Sections and junctions).

*** The quantity of removed AYPC.W72.0911 seam sealing depends on the type of opening and quantity of bearing supports

Standard inward opening door

Left (L) and right (R) opening

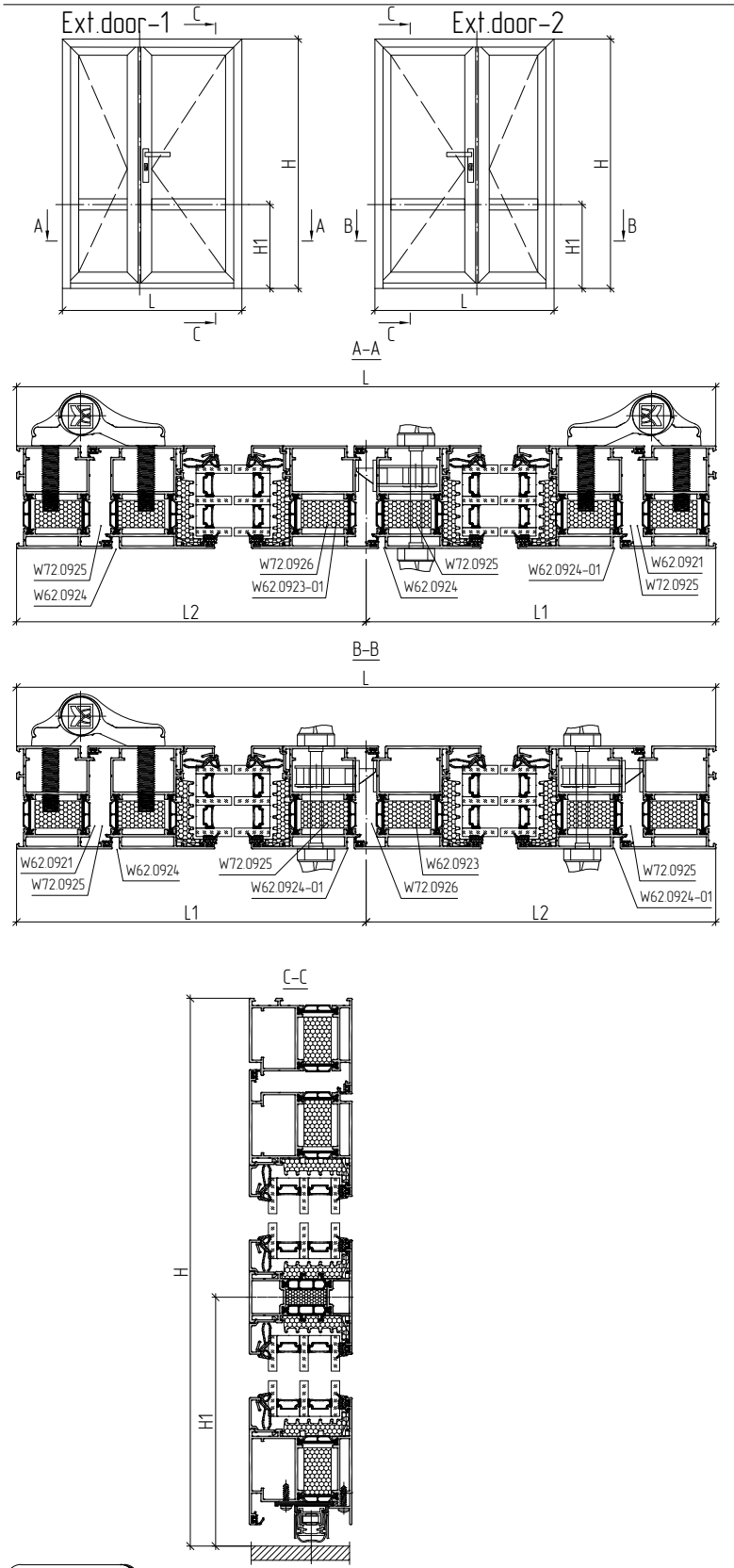

Specification

Article	Name Image	45°	L	1....
Profile				
AYPC.W72.0105	Frame profile		L	1
			H	1
			H	1
AYPC.W72.0204	Leaf profile		H-65*	1
AYPC.W72.0205	Leaf profile		L1-41.5	2
			L2-41.5*	2
			H-65	3
AYPC.W72.0302	Transom bar profile		L1-175.5	1
			L2-175.5	1
AYPC.W62.0817	Leaf adjoining profile		L1-85.5	1
			L2-102.5	1
AYPC.C48.0602	Glass bead profile		L-175.5	4
			L-175.5	4
			H-H1-179	4
			H1-144	4
AYPC.W62.0920	FAPIM DA0581 threshold adapter		L1-73.5	1
			L2-96.5	1
FAPIM DA0581	Threshold profile		L1-73.5	1
			L2-96.5	1

1. Configuration shown in the specification table is identical for the right and left doors.
2. Select articles of glass bead profiles and gaskets depending on infill unit thickness (see section 01.04 – Table of glazing).
3. For profiles marked with * the subsequent machining is required (see the section 04.06 – Profiles machining and assemblage).

** Other accessories are possible (see the section 04.04 – Sections and junctions).

*** The quantity of removed AYPC.W72.0911 seam sealing depends on the type of opening and quantity of bearing supports

Standard inward opening door

Left (L) and right (R) opening

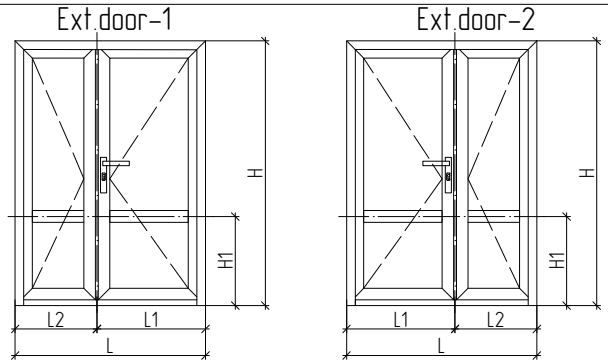

Specification

Article	Name	Image	1....
	Accessories		
AYPC.W62.0917	Bearing support		16
100x56x1(3)	Leveling support		16 (16)
AYPC.C48.0919M–01	Drain plug		8
AYPC.W62.0937	Clamping corner		20
AYPC.W62.0912	Plastic corner		8
Pin 5x10	Pin 5x10 DIN6325D		40
AYPC.W62.0913	Plastic corner		8
AYPC.W62.0957	Leveling corner		8
AYPC.W62.0973–01	Transom fixing element		4
AYPC.W62.0951–01	Transom fixing element		4
AYPC.W62.0916–01	Foamed insert		4
AYPC.W62.0921	Automatic threshold stop		2
AYPC.W72.0925	EPDM collar		3
AYPC.W72.0926	EPDM collar		1
	Accessories for the door with the left active leaf Ext.door–1		
AYPC.C48.0906	Plug		1
AYPC.C48.0907	Plug		2
AYPC.W62.0924	Adjoining profile plug		2
AYPC.W62.0924–01	Adjoining profile plug		1
AYPC.W62.0923–01	Inactive leaf plug		1
	Accessories for the door with the right active leaf Ext.door–2		
AYPC.C48.0906	Plug		2
AYPC.C48.0907	Plug		1
AYPC.W62.0924	Adjoining profile plug		1
AYPC.W62.0924–01	Adjoining profile plug		2
AYPC.W62.0923	Inactive leaf plug		1

Article	Name	Image	L	1....
	Gaskets			
FRK98	Rubber gasket		Lx2+Hx6–475	1
** FRK193	Rubber gasket		(A+A1+B+B1)x4	1
** AYPC.W72.0911	Seam sealing		(A1+A2+B1+B2)x4–16x100***	1
** FRK197	Rubber gasket		(A+A1+B+B1)x4	1
** FRK179	Rubber corner			16
50 mm infill unit				
A=L1–193; B=H–H1–153				1
A=L1–193; B1=H1–118				1
A1=L2–193; B=H–H1–153				1
A1=L2–193; B1=H1–118				1

Article	Name	Image	1....
	Fasteners		
2.9x9.5–A2 DIN7982	Self–tapping screw		3
3.9x13–A2 DIN7982	Self–tapping screw		10
3.9x13–A2 DIN7981	Self–tapping screw		3
3.9x16–A2 DIN7981	Self–tapping screw		(2xL–560)/300+4
3.9x19–A2 DIN7981	Self–tapping screw		2

1. Configuration shown in the specification table is identical for the right and left doors.
2. Select articles of glass bead profiles and gaskets depending on infill unit thickness (see section 01.04 – Table of glazing).
3. For profiles marked with * the subsequent machining is required (see the section 04.06 – Profiles machining and assemblage).

** Other accessories are possible (see the section 04.04 – Sections and junctions).

*** The quantity of removed AYPC.W72.0911 seam sealing depends on the type of opening and quantity of bearing supports

Door with basement profile. Inward opening

Left (L) and right (R) opening

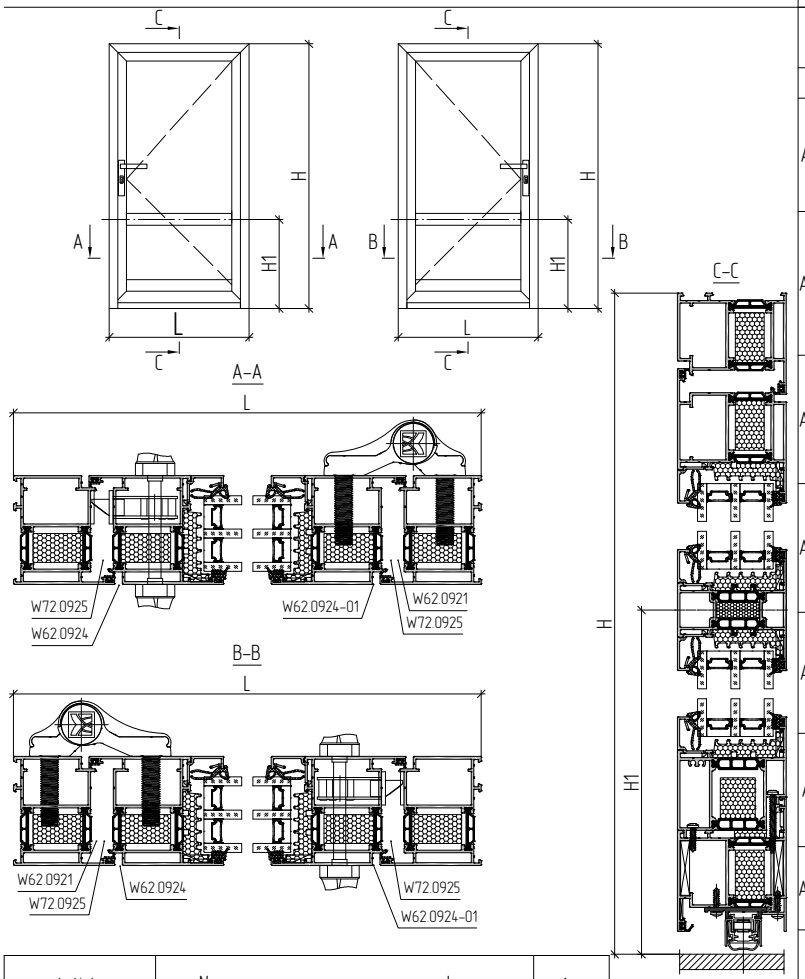

Specification

Article	Name Image			1...
Profile				
AYPC.W72.0105	Frame profile		L	1
			H	1
			H	1
AYPC.W72.0205	Leaf profile		L-100	1
			H-65	2
AYPC.W72.0302	Transom bar profile		L-234	1
AYPC.W72.0839	Basement profile		L-234	1
AYPC.W62.0817	Leaf adjoining profile		L-144	1
AYPC.C48.0602	Glass bead profile		L-234	4
			H-H1-179	2
			H1-144	2
AYPC.W62.0920	FAPIM DA0581 threshold adapter		L-132	1
FAPIM DA0581	Threshold profile		L-132	1

Article	Name	Image	1...
Accessories			
AYPC.W62.0917	Bearing support		8
100x56x1(3)	Leveling support		8 (8)
AYPC.C48.0919M-01	Drain plug		4
AYPC.W62.0937	Clamping corner		12
AYPC.W62.0912	Plastic corner		4
Pin 5x10	Pin 5x10 DIN6325D		24
AYPC.W62.0913	Plastic corner		4
AYPC.W62.0914	Corner plug kit		1
AYPC.W62.0957	Leveling corner		6
AYPC.W62.0973-01	Transom fixing element		2
AYPC.W62.0951-01	Transom fixing element		2
AYPC.W62.0916-01	Foamed insert		2
AYPC.W62.0921	Automatic threshold stop		1
AYPC.W62.0924	Adjoining profile plug		1
AYPC.W62.0924-01	Adjoining profile plug		1
AYPC.W72.0925	EPDM collar		2

Article	Name Image		1...
Gaskets			
FRK98	Rubber gasket	Lx2+Hx4-460	1
** FRK193	Rubber gasket	(A+B)x2+(A+B1)x2	1
** AYPC.W72.0911	Seam sealing	Ax4+Bx2+B1x2-8x100***	1
** FRK197	Rubber gasket	(A+B)x2+(A+B1)x2	1
** FRK179	Rubber corner		8
50 mm infill unit			
A=L-252; B=H-H1-153			1
A=L-252; B1=H1-171			1

Article	Name Image	1...
Fasteners		
3.9x13-A2 DIN7982	Self-tapping screw	5
3.9x13-A2 DIN7981	Self-tapping screw	2
3.9x16-A2 DIN7981	Self-tapping screw	(3xL-684)/300+6
3.9x38-A2 DIN7981	Self-tapping screw	(L-234)/300

1. Configuration shown in the specification table is identical for the right and left doors.
2. Select articles of glass bead profiles and gaskets depending on infill unit thickness (see section 01.04 – Table of glazing).
3. For profiles marked with * the subsequent machining is required (see the section 04.06 – Profiles machining and assemblage).

** Other accessories are possible (see the section 04.04 – Sections and junctions).

*** The quantity of removed AYPC.W72.0911 seam sealing depends on the type of opening and quantity of bearing supports

Door with basement profile. Inward opening

Left (L) and right (R) opening

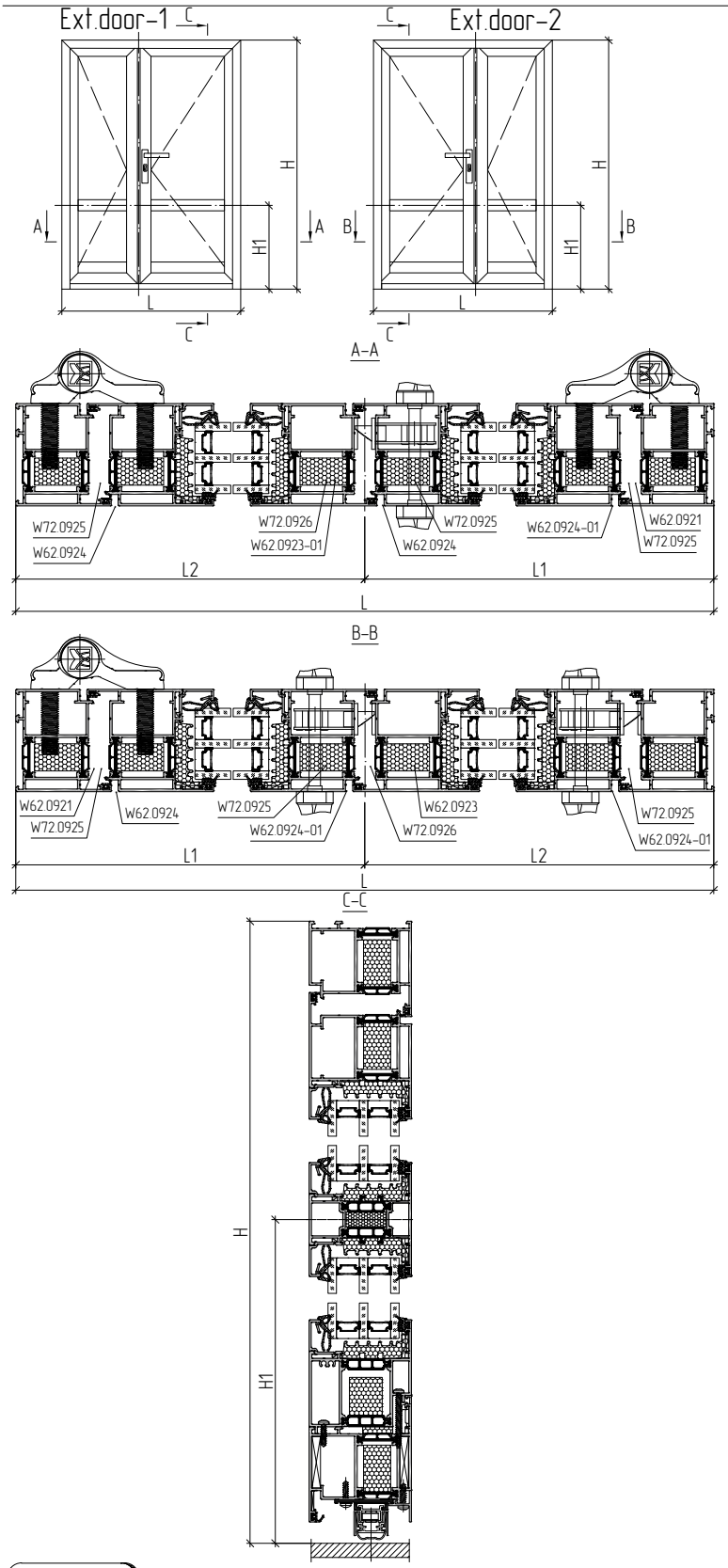

Specification

Article	Name Image		L	1...
Profile				
AYPC.W72.0105	Frame profile		L	1
			H	1
			H	1
AYPC.W72.0204	Leaf profile		H-65*	1
AYPC.W72.0205	Leaf profile		L1-41.5	2
			L2-41.5*	2
			H-65	3
AYPC.W72.0302	Transom bar profile		L1-175.5	1
			L2-175.5	1
AYPC.W72.0839	Basement profile		L1-175.5	1
			L2-175.5	1
AYPC.W62.0817	Leaf adjoining profile		L1-85.5	1
			L2-102.5	1
AYPC.C48.0602	Glass bead profile		L-175.5	4
			L-175.5	4
			H-H1-179	4
			H1-144	4
AYPC.W62.0920	FAPIM DA0581 threshold adapter		L1-73.5	1
			L2-96.5	1
FAPIM DA0581	Threshold profile		L1-73.5	1
			L2-96.5	1

1. Configuration shown in the specification table is identical for the right and left doors.
2. Select articles of glass bead profiles and gaskets depending on infill unit thickness (see section 01.04 – Table of glazing).
3. For profiles marked with * the subsequent machining is required (see the section 04.06 – Profiles machining and assemblage).

** Other accessories are possible (see the section 04.04 – Sections and junctions).

*** The quantity of removed AYPC.W72.0911 seam sealing depends on the type of opening and quantity of bearing supports

Door with basement profile. Inward opening

Left (L) and right (R) opening

Ext.door–1

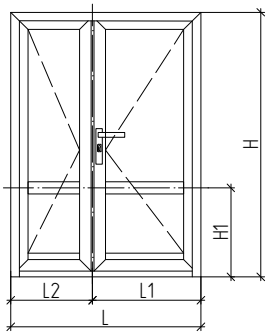

Ext.door–2

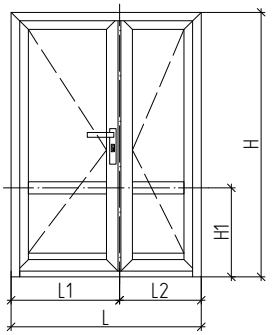

Article	Name	Image	L	1....
Gaskets				
FRK98	Rubber gasket		Lx2+Hx6–475	1
** FRK193	Rubber gasket		(A+A1+B+B1)x4	1
** AYPC.W72.0911	Seam sealing		(A1+A2+B1+B2)x4–16x100***	1
** FRK197	Rubber gasket		(A+A1+B+B1)x4	1
** FRK179	Rubber corner			16
50 mm infill unit				
A=L2–152; B=H–H1–153				1
A=L2–152; B1=H1–110				1
A1=L3–152; B=H–H1–153				1
A1=L3–152; B1=H1–110				1

Specification

Article	Name	Image	1....
Accessories			
AYPC.W62.0917	Bearing support		16
100x56x1(3)	Leveling support		16 (16)
AYPC.C48.0919M–01	Drain plug		8
AYPC.W62.0937	Clamping corner		20
AYPC.W62.0912	Plastic corner		8
Pin 5x10	Pin 5x10 DIN6325D		40
AYPC.W62.0913	Plastic corner		8
AYPC.W62.0914	Corner plug kit		2
AYPC.W62.0957	Leveling corner		8
AYPC.W62.0973–01	Transom fixing element		4
AYPC.W62.0951–01	Transom fixing element		4
AYPC.W62.0916–01	Foamed insert		4
AYPC.W62.0921	Automatic threshold stop		2
AYPC.W72.0925	EPDM collar		3
AYPC.W72.0926	EPDM collar		1
Accessories for the door with the left active leaf Ext.door–1			
AYPC.C48.0906	Plug		1
AYPC.C48.0907	Plug		2
AYPC.W62.0924	Adjoining profile plug		2
AYPC.W62.0924–01	Adjoining profile plug		1
AYPC.W62.0923–01	Inactive leaf plug		1
Accessories for the door with the right active leaf Ext.door–2			
AYPC.C48.0906	Plug		2
AYPC.C48.0907	Plug		1
AYPC.W62.0924	Adjoining profile plug		1
AYPC.W62.0924–01	Adjoining profile plug		2
AYPC.W62.0923	Inactive leaf plug		1

Article	Name	Image	1....
Fasteners			
2.9x9.5–A2 DIN7982	Self–tapping screw		3
3.9x13–A2 DIN7982	Self–tapping screw		10
3.9x13–A2 DIN7981	Self–tapping screw		3
3.9x16–A2 DIN7981	Self–tapping screw		(2xL–450)/300+(L–234)/300+6
3.9x19–A2 DIN7981	Self–tapping screw		2
3.9x38–A2 DIN7981	Self–tapping screw		(L–234)/300

1. Configuration shown in the specification table is identical for the right and left doors.
2. Select articles of glass bead profiles and gaskets depending on infill unit thickness (see section 01.04 – Table of glazing).
3. For profiles marked with * the subsequent machining is required (see the section 04.06 – Profiles machining and assemblage).

** Other accessories are possible (see the section 04.04 – Sections and junctions).

*** The quantity of removed AYPC.W72.0911 seam sealing depends on the type of opening and quantity of bearing supports

ALUTECH PROFILE SYSTEMS

Corner connections of doors with automatic threshold

Outward opening

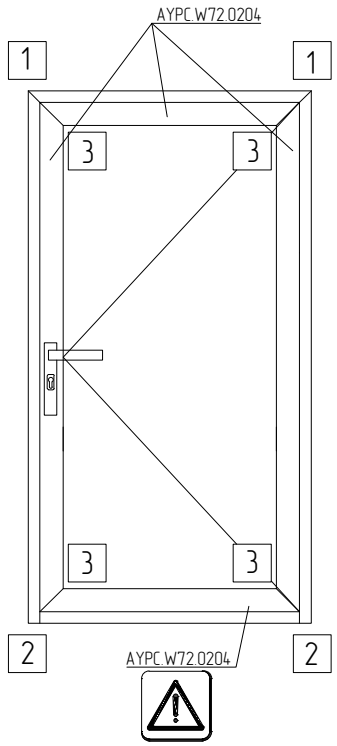

Inward opening

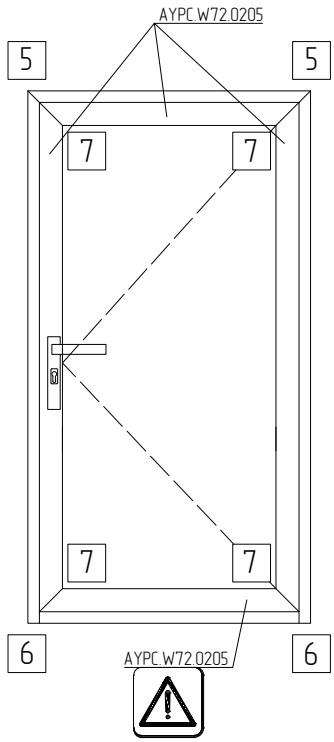

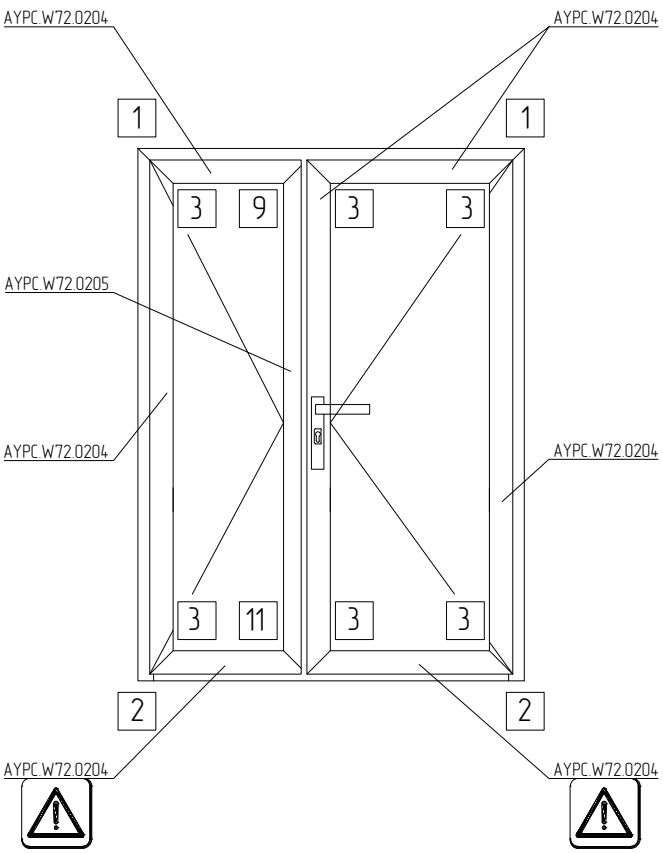

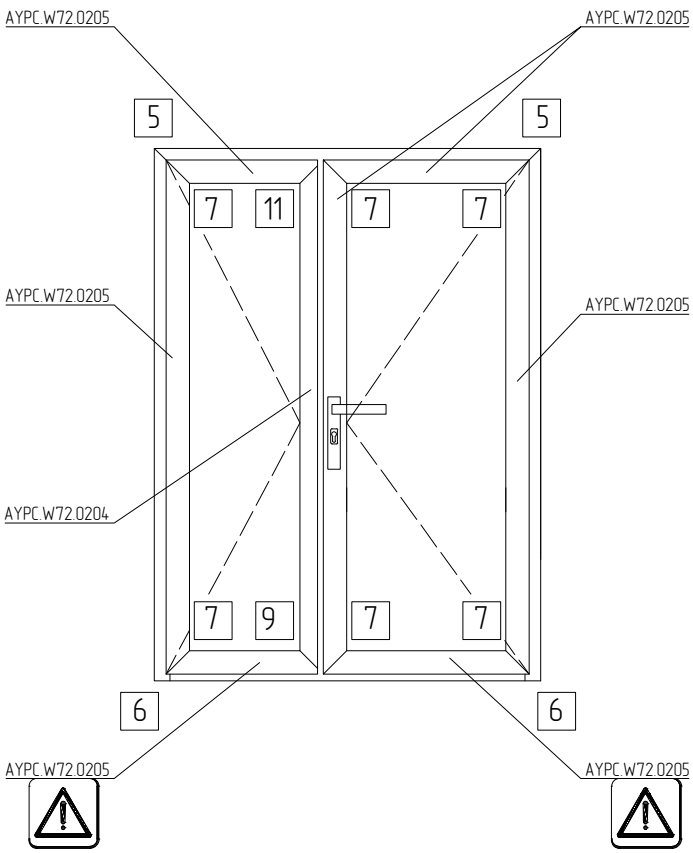

Use only AYPC.W72.0204 and AYPC.W72.0205 profiles while assembling door leaf with automatic thresholds.
For assembly sequence of corner connections except 2, 6, 13 see the section 04.06 – Profiles machining and assemblage.

Corner connections of doors with automatic threshold

Outward opening

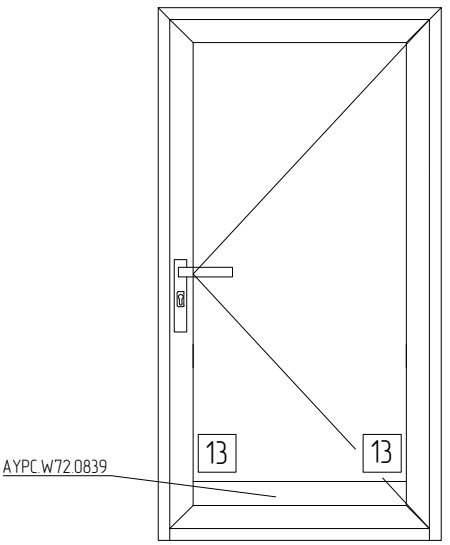

Inward opening

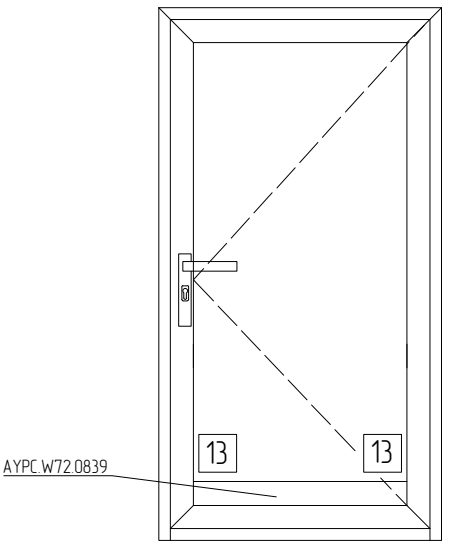

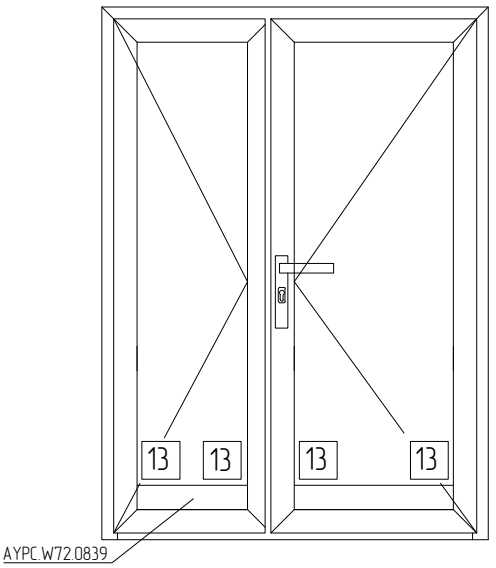

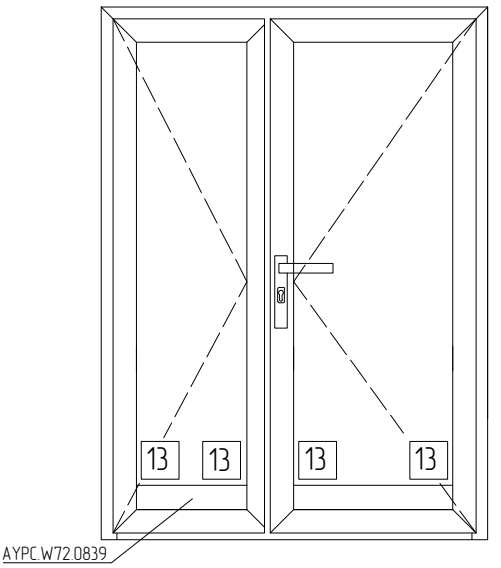

Plugs installation depending on the door type

Outward opening

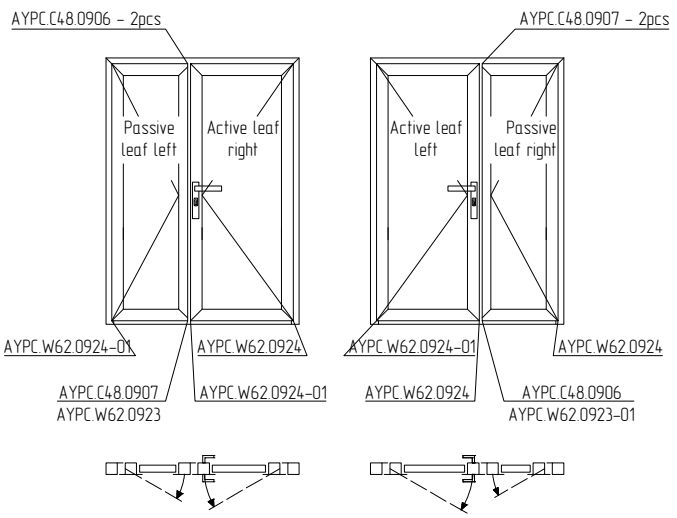

Inward opening

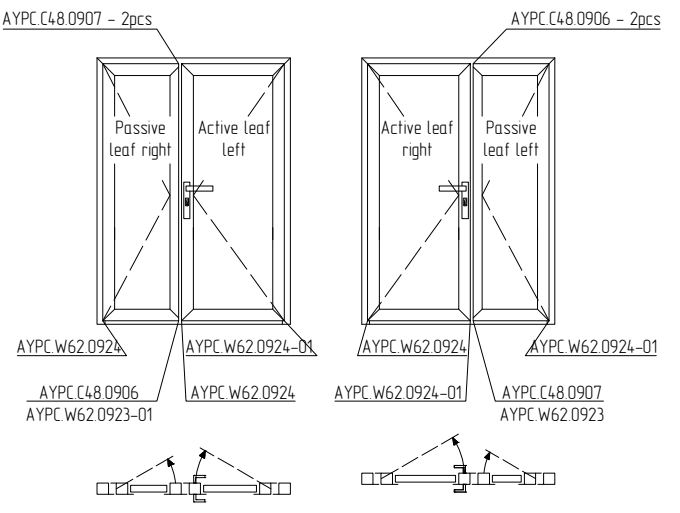

Assembly sequence of frame corner connection No 2, No 6 for automatic threshold installation

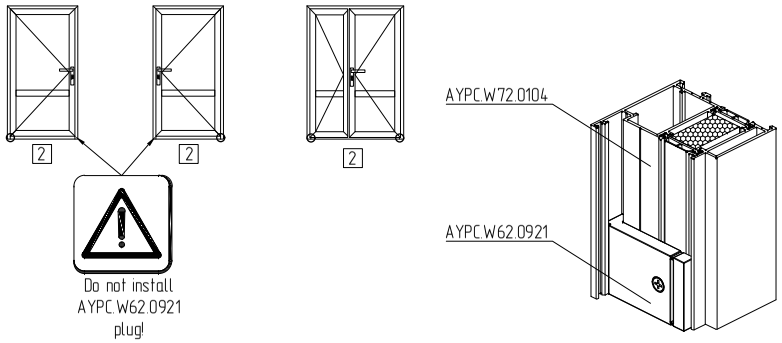

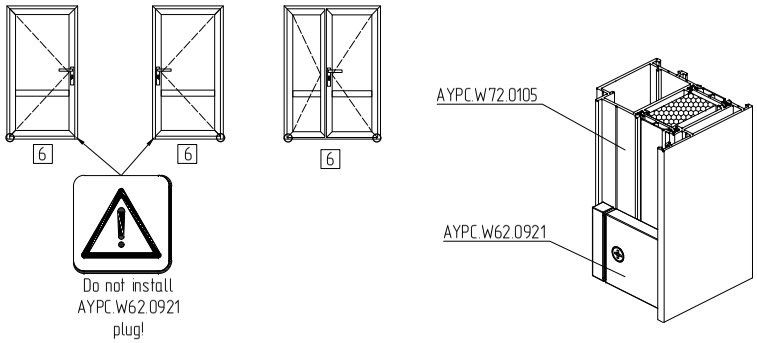

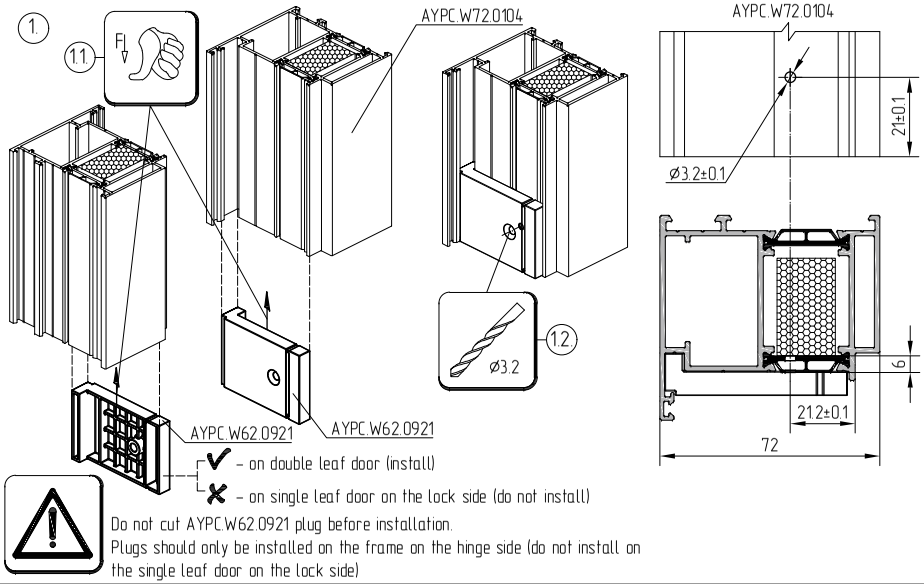

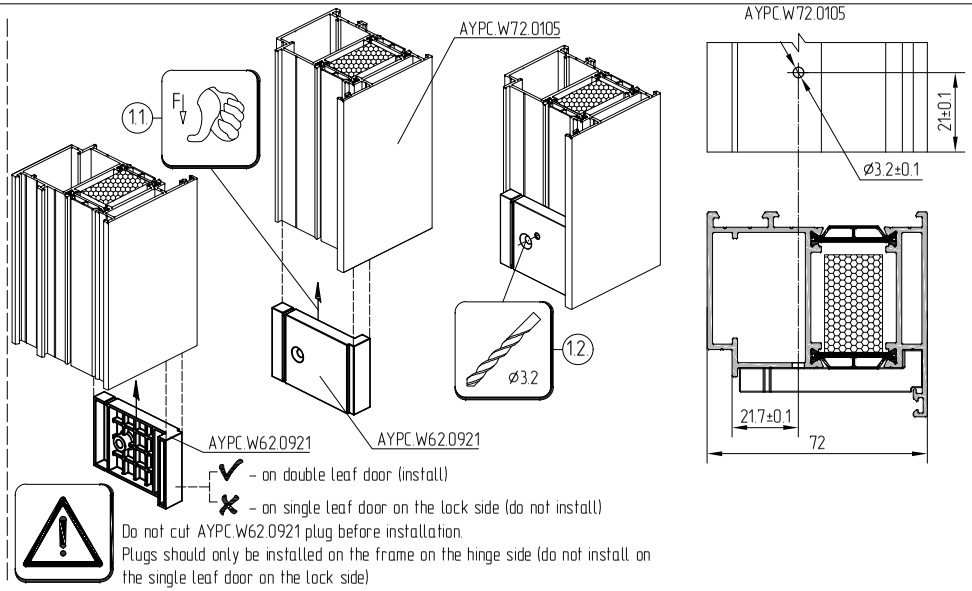

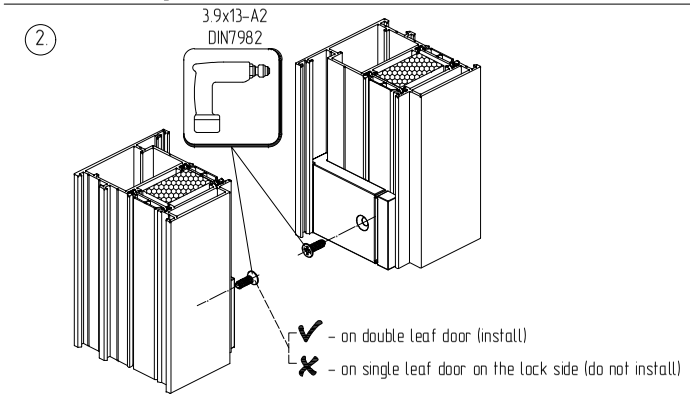

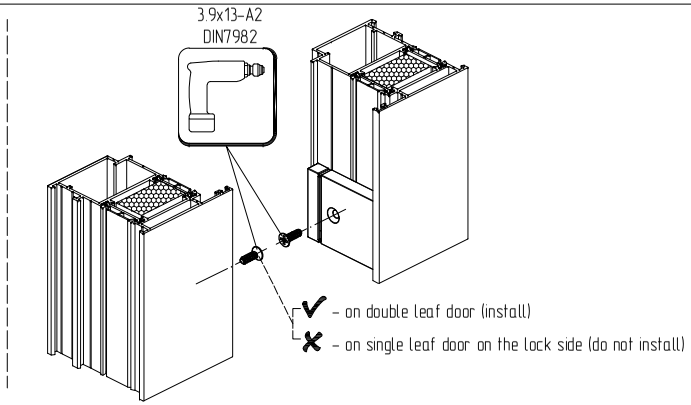

Installation sequence of automatic threshold on the active leaf

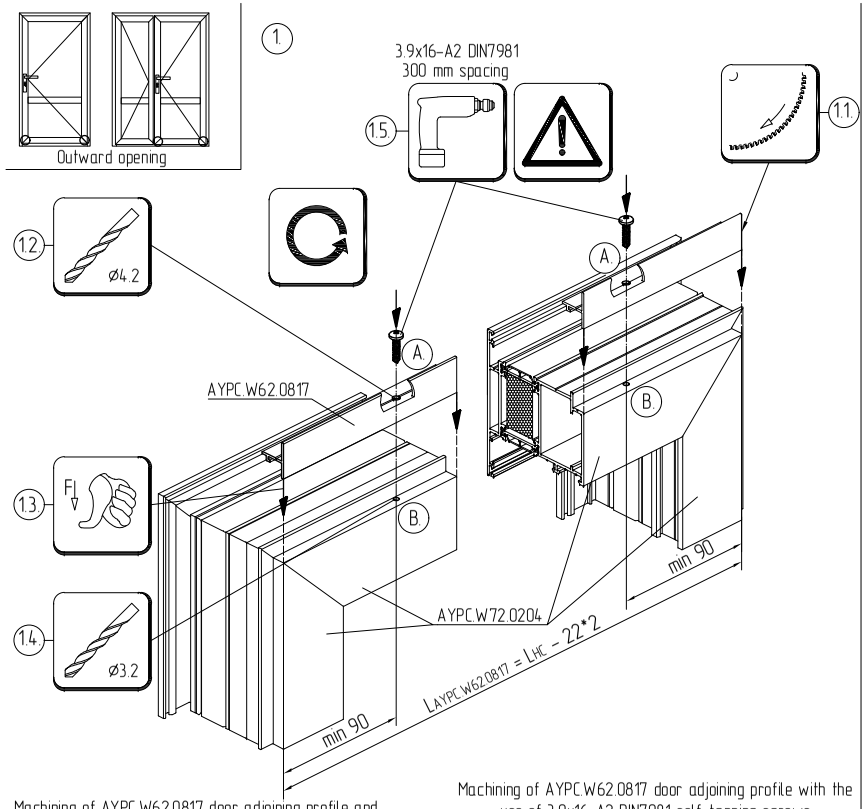

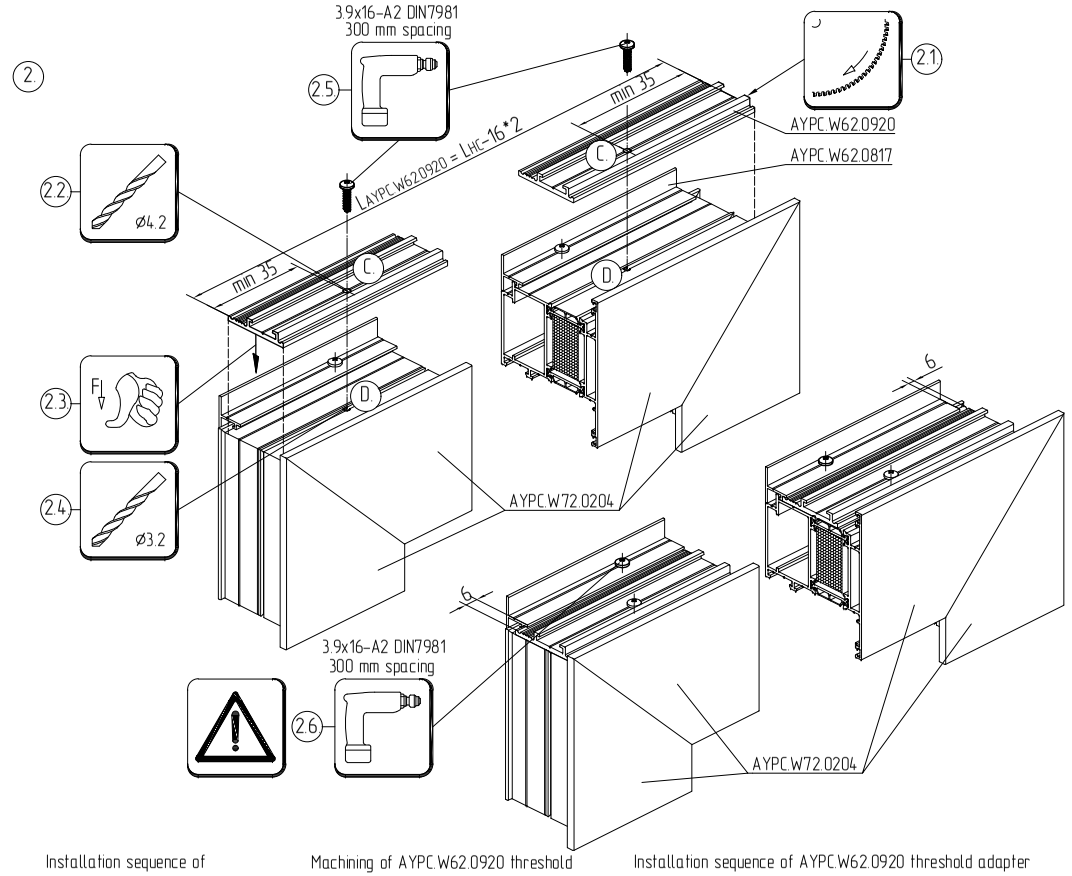

Machining of AYPC.W62.0817 door adjoining profile and AYPC.W72.0204 leaf

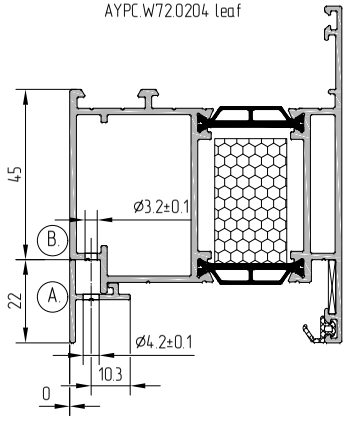

Do not tighten self-tapping screws!

Machining of AYPC.W62.0817 door adjoining profile with the use of 3.9x16-A2 DIN7981 self-tapping screws

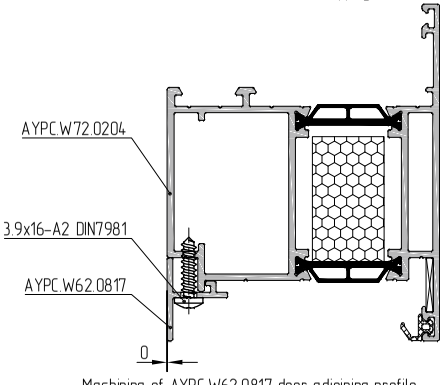

Machining of AYPC.W62.0817 door adjoining profile

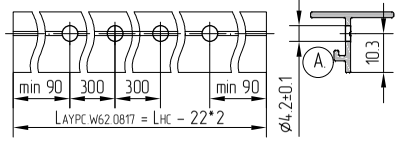

Installation sequence of AYPC.W62.0920 threshold adapter

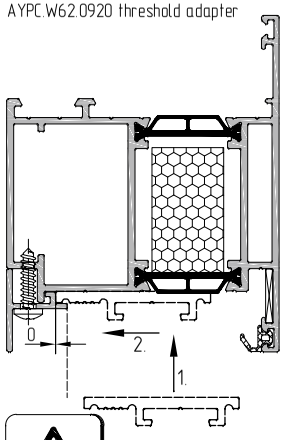

Tighten self-tapping screws!

Machining of AYPC.W62.0920 threshold adapter and AYPC.W72.0204 leaf

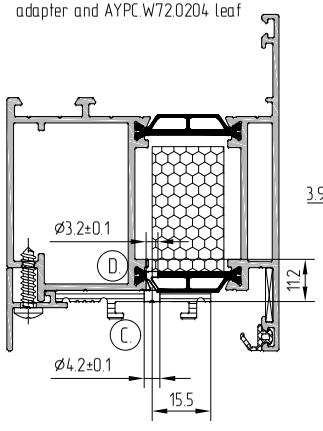

Installation sequence of AYPC.W62.0920 threshold adapter with the use of 3.9x16-A2 DIN7981 self-tapping screws

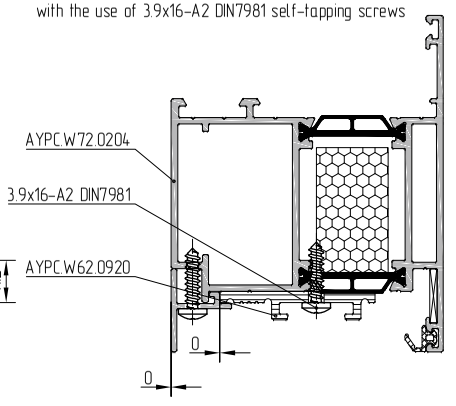

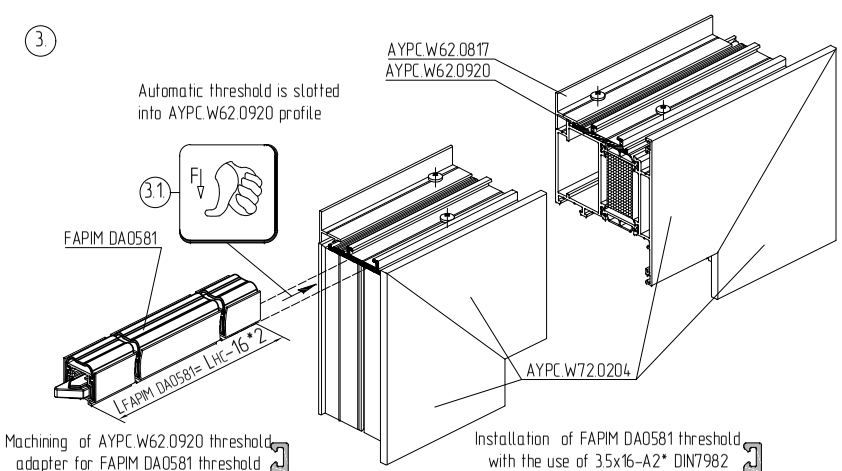
3.
Automatic threshold is slotted into AYPC.W62.0920 profile
AYPC.W62.0817
AYPC.W62.0920
3.1
FAPIM DA0581
LFAPIM DA0581= LHC-16*2
AYPC.W72.0204

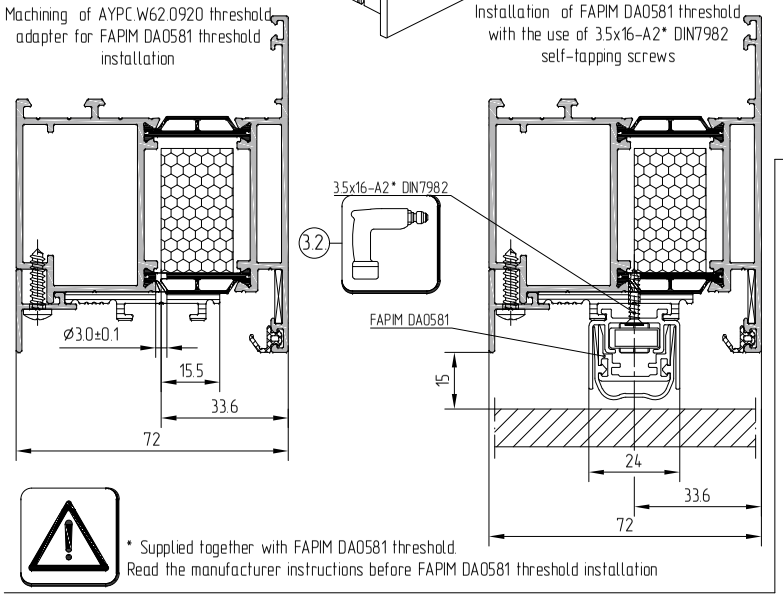
Machining of AYPC.W62.0920 threshold adapter for FAPIM DA0581 threshold installation
Ø3.0±0.1
15.5
33.6
72
Installation of FAPIM DA0581 threshold with the use of 3.5x16-A2* DIN7982 self-tapping screws
3.2
3.5x16-A2* DIN7982
FAPIM DA0581
15
24
33.6
72
* Supplied together with FAPIM DA0581 threshold.
Read the manufacturer instructions before FAPIM DA0581 threshold installation

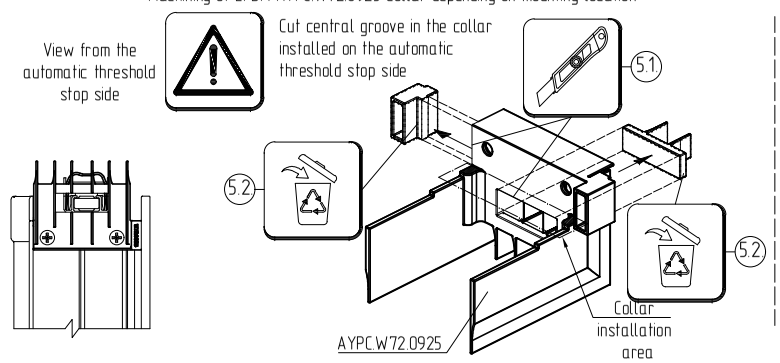
Machining of EPDM AYPC.W72.0925 collar depending on mounting location
View from the automatic threshold stop side
Cut central groove in the collar installed on the automatic threshold stop side
5.1
5.2
AYPC.W72.0925
Collar installation area

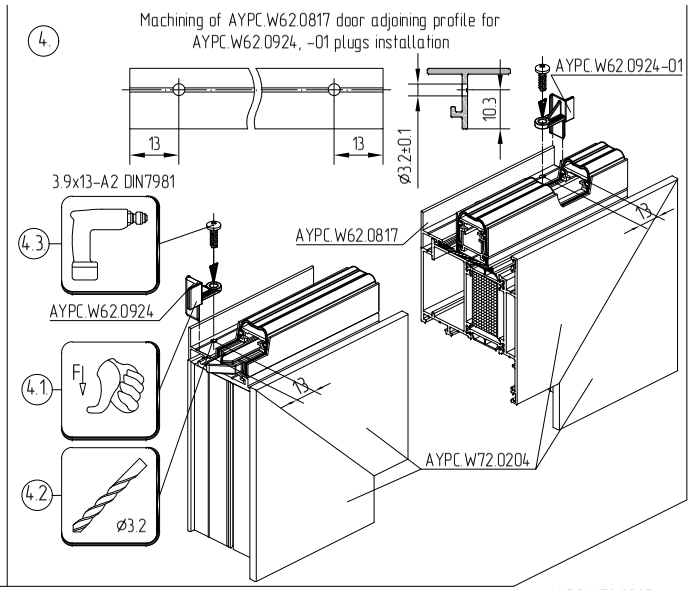
4.
Machining of AYPC.W62.0817 door adjoining profile for AYPC.W62.0924, -01 plugs installation
13
13
10.3
Ø3.2±0.1
AYPC.W62.0924-01
3.9x13-A2 DIN7981
4.3
AYPC.W62.0817
AYPC.W62.0924
4.1
4.2
Ø3.2
AYPC.W72.0204

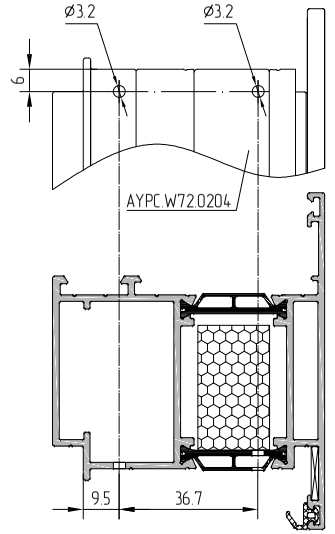
Machining of AYPC.W72.0204 leaf profile for EPDM AYPC.W72.0925 collar installation
Ø3.2
Ø3.2
6
AYPC.W72.0204
9.5
36.7

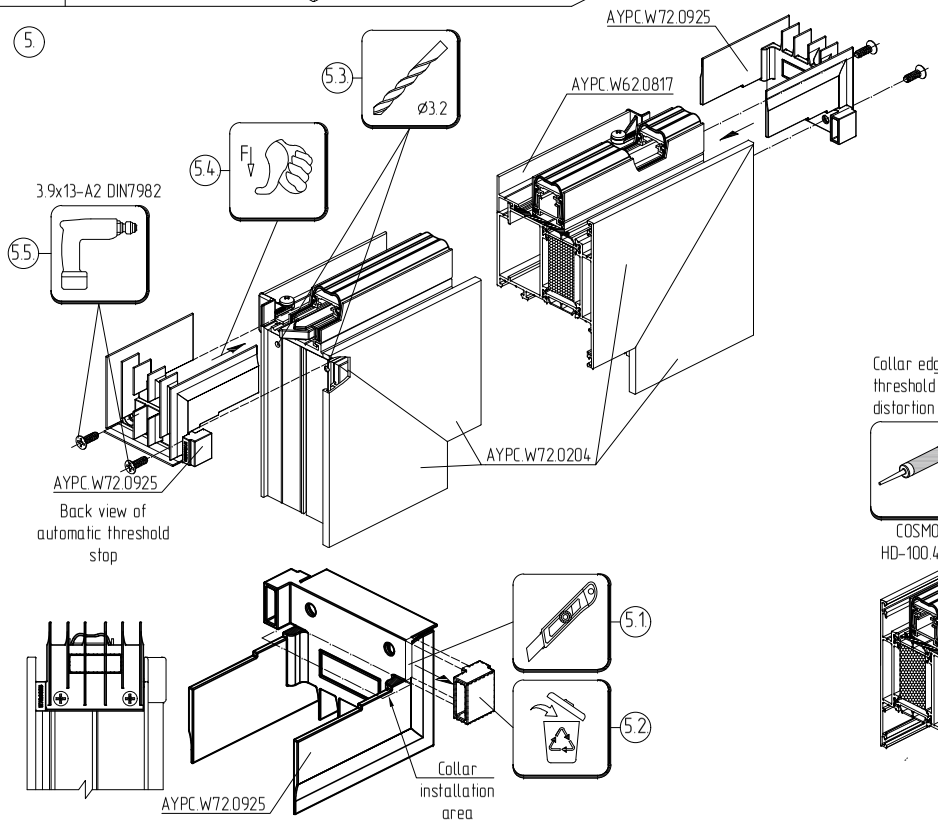
5.
AYPC.W72.0925
5.3
Ø3.2
AYPC.W62.0817
5.4
3.9x13-A2 DIN7982
5.5
AYPC.W72.0204
AYPC.W72.0925
Back view of automatic threshold stop
5.1
5.2
AYPC.W72.0925
Collar installation area

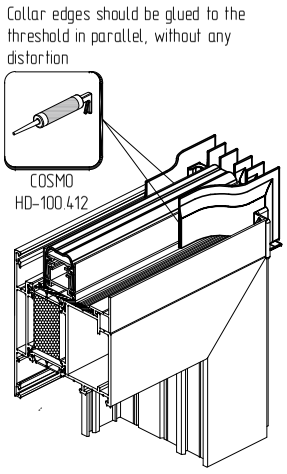
Collar edges should be glued to the threshold in parallel, without any distortion
COSMO HD-100.412

Installation sequence of automatic threshold on passive leaf with Stublina 3008 hidden latch

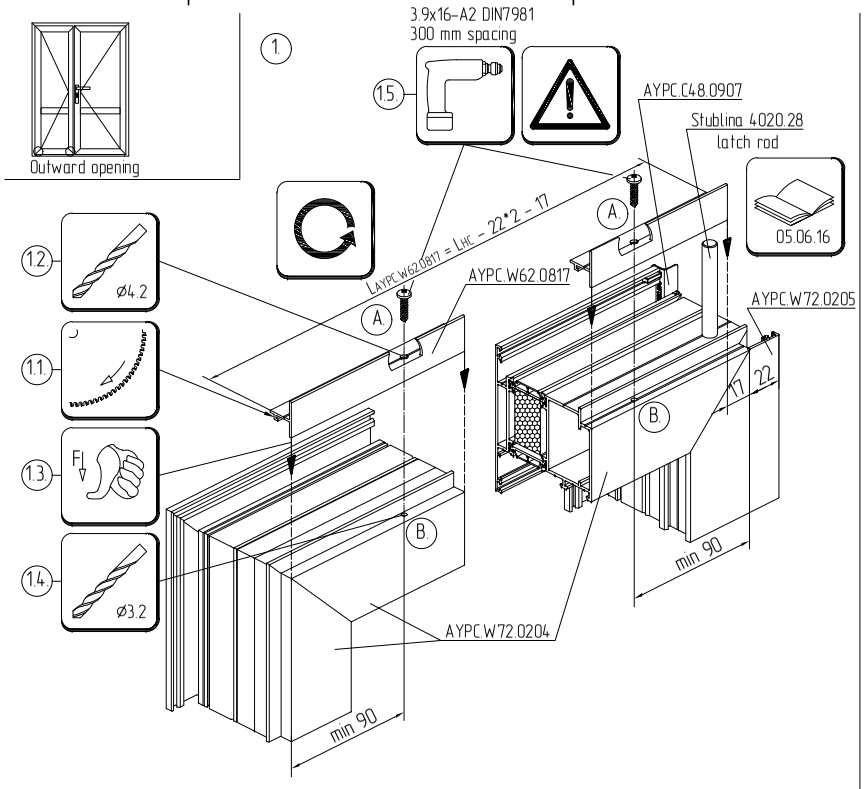

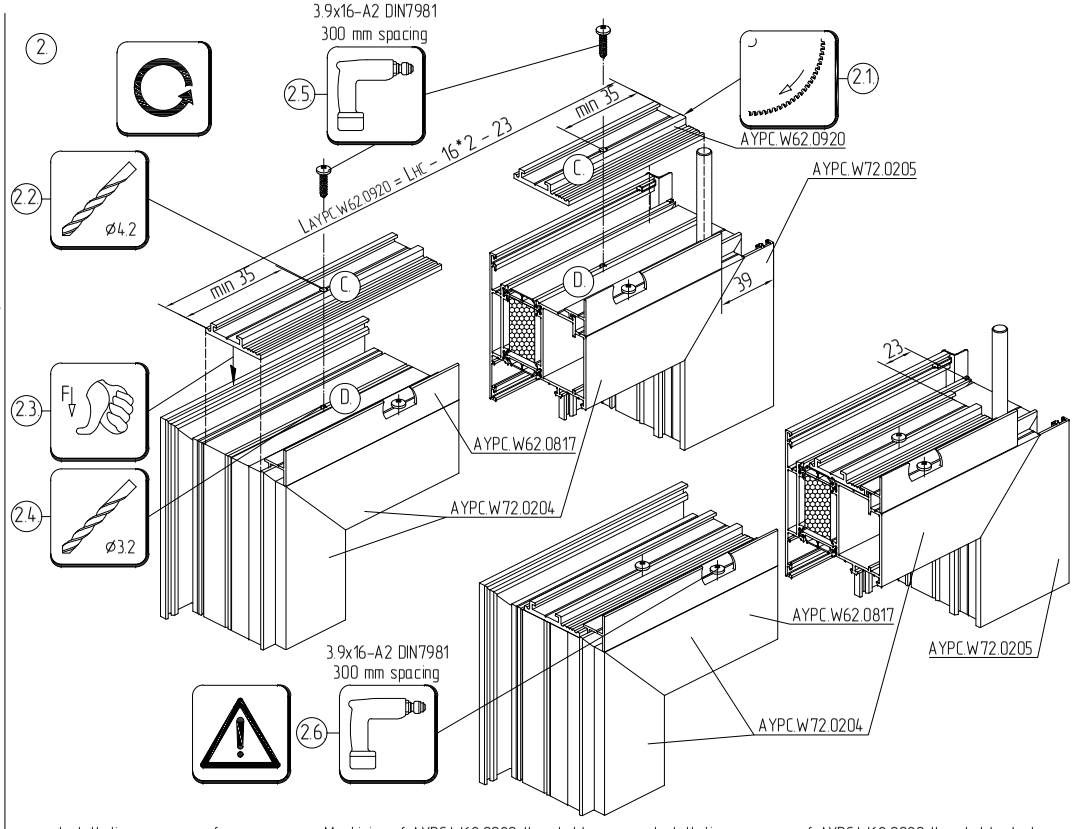

Machining of AYPC.W62.0817 door adjoining profile and AYPC.W72.0204 leaf

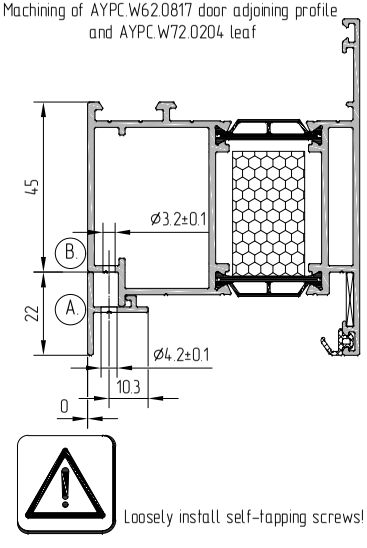

Machining of AYPC.W62.0817 door adjoining profile with the use of 3.9x16-A2 DIN7981 self-tapping screws

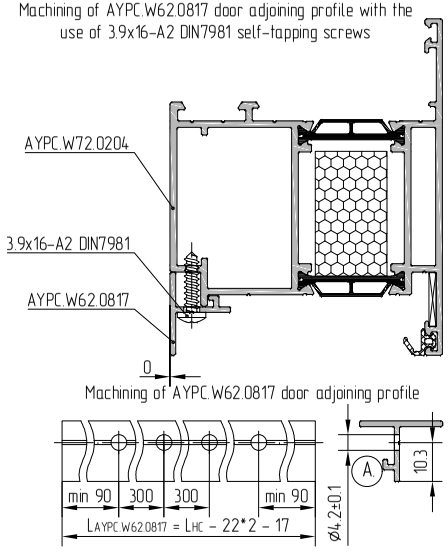

Installation sequence of AYPC.W62.0920 threshold adapter

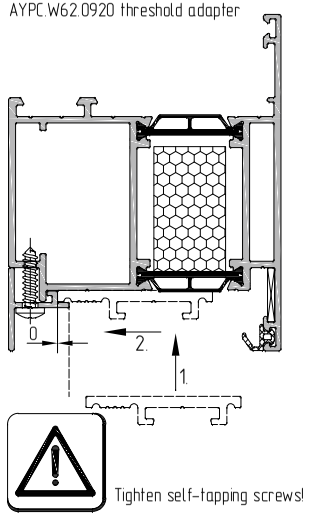

Machining of AYPC.W62.0920 threshold adapter and AYPC.W72.0204 leaf

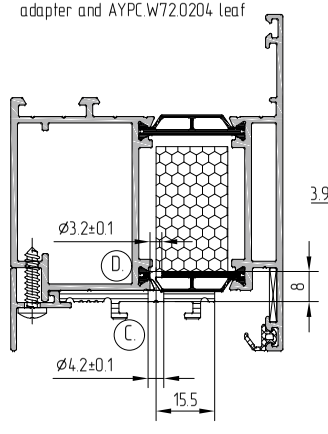

Installation sequence of AYPC.W62.0920 threshold adapter with the use of 3.9x16-A2 DIN7981 self-tapping screws

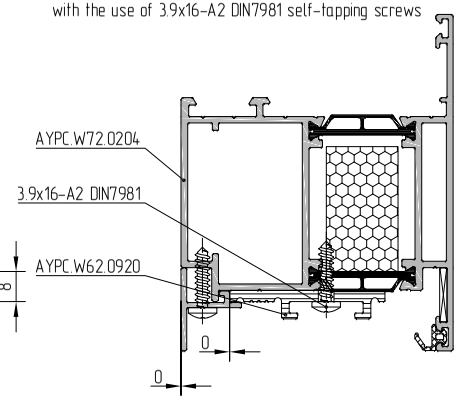

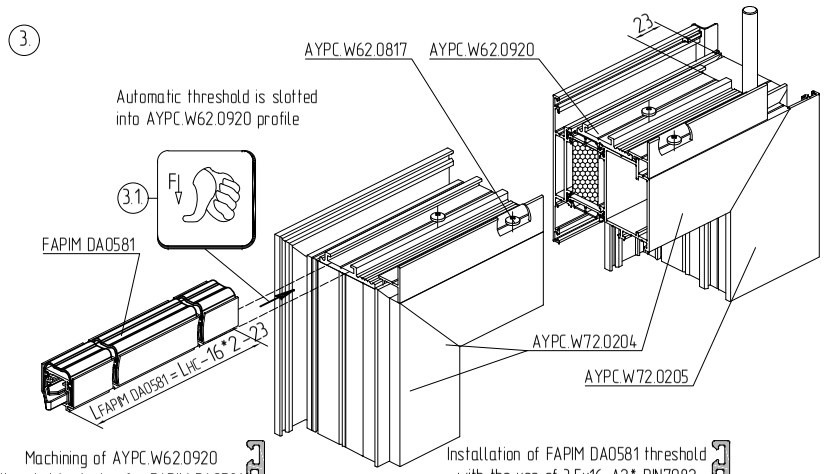
3.
Automatic threshold is slotted into AYPC.W62.0920 profile
AYPC.W62.0817
AYPC.W62.0920
23
3.1
FAPIM DA0581
L FAPIM DA0581 = L-16*2-23
AYPC.W72.0204
AYPC.W72.0205

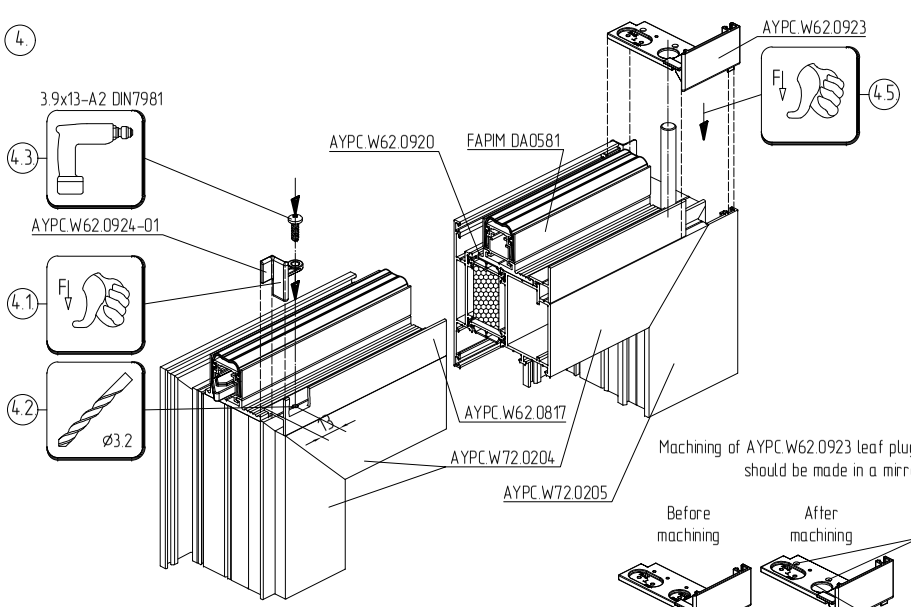
4.
AYPC.W62.0923
4.5
3.9x13-A2 DIN7981
4.3
AYPC.W62.0920
FAPIM DA0581
AYPC.W62.0924-01
4.1
4.2
Ø3.2
AYPC.W62.0817
AYPC.W72.0204
AYPC.W72.0205

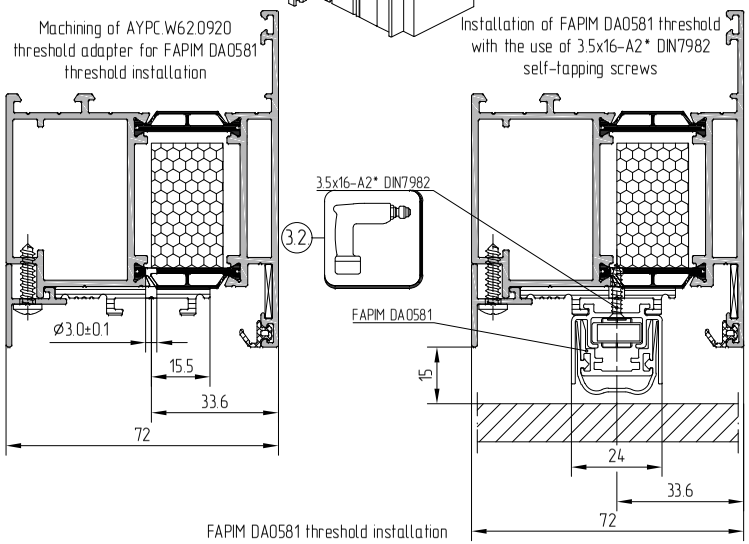
Machining of AYPC.W62.0920 threshold adapter for FAPIM DA0581 threshold installation
Ø3.0±0.1
15.5
33.6
72
Installation of FAPIM DA0581 threshold with the use of 3.5x16-A2* DIN7982 self-tapping screws
3.5x16-A2* DIN7982
3.2
FAPIM DA0581
15
24
33.6
72
FAPIM DA0581 threshold installation

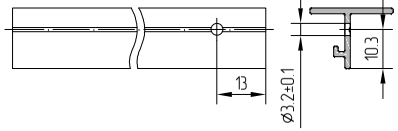
Machining of AYPC.W62.0817 door adjoining profile for AYPC.W62.0924, -01 plugs installation
(the left leaf should be processed in a mirror manner)
13
Ø3.2±0.1
10.3

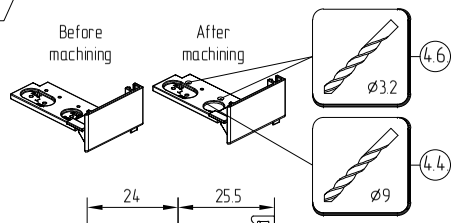
Machining of AYPC.W62.0923 leaf plug (AYPC.W62.0923-01 - should be made in a mirror manner)
Before machining
After machining
4.6
Ø3.2
4.4
Ø9

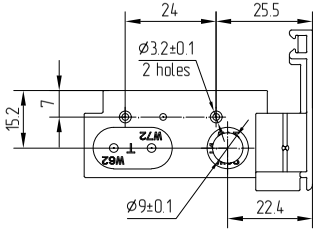
24
25.5
Ø3.2±0.1
2 holes
15.2
7
W72
W62
T
Ø9±0.1
22.4

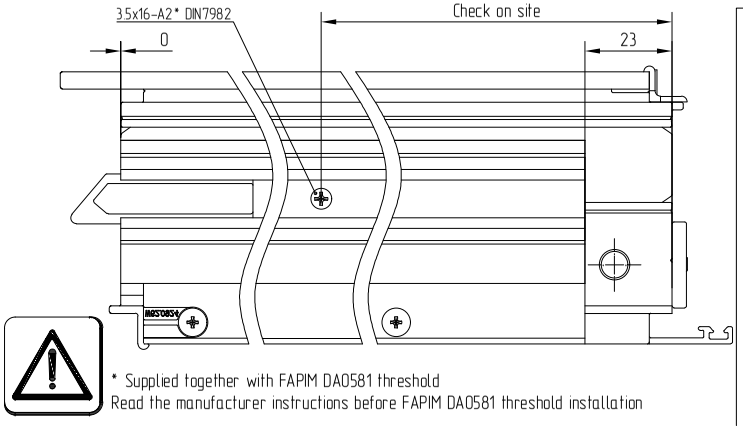
3.5x16-A2* DIN7982
0
Check on site
23
* Supplied together with FAPIM DA0581 threshold
Read the manufacturer instructions before FAPIM DA0581 threshold installation

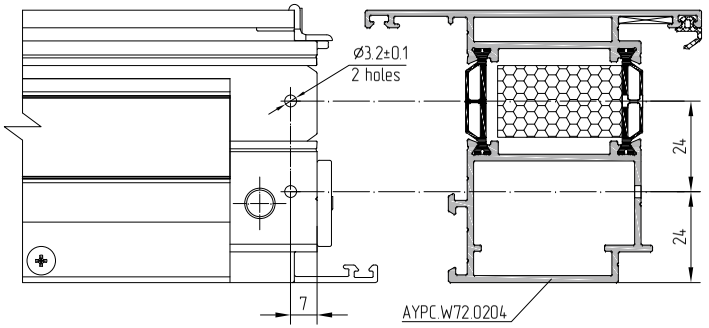
Machining of AYPC.W72.0204 leaf profile for AYPC.W62.0923, -01 plugs installation
(the left passive leaf should be processed in a mirror manner)
Ø3.2±0.1
2 holes
24
24
7
AYPC.W72.0204

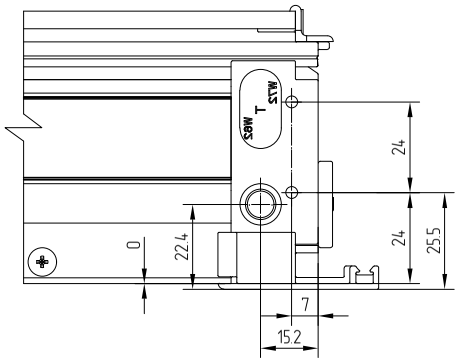
Installation of AYPC.W62.0923, -01 plugs
(the left passive leaf should be processed in a mirror manner)
W62
T
W72
24
24
255
0
22.4
7
15.2

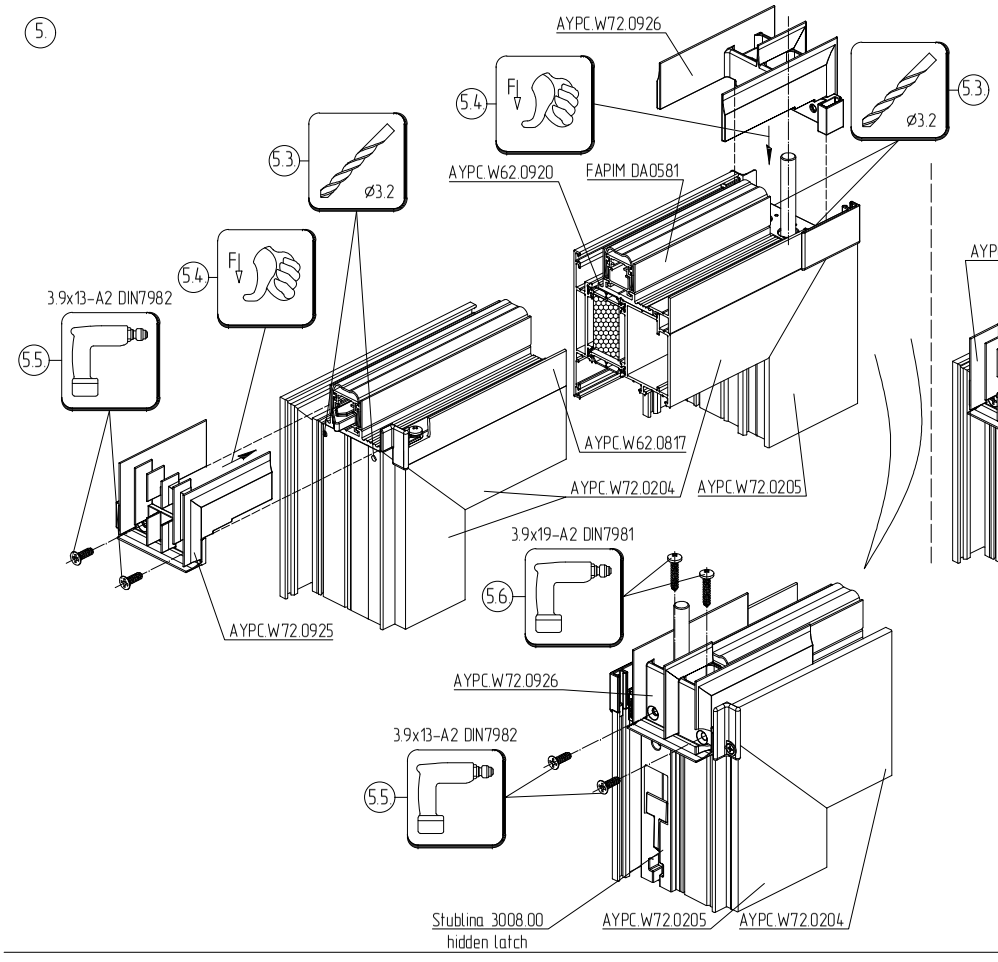
5.
AYPC.W72.0926
5.4
5.3
Ø3.2
AYPC.W62.0920
FAPIM DA0581
3.9x13-A2 DIN7982
5.5
AYPC.W62.0817
AYPC.W72.0204
AYPC.W72.0205
AYPC.W72.0925
3.9x19-A2 DIN7981
5.6
AYPC.W72.0926
3.9x13-A2 DIN7982
5.5
Stublina 3008.00
hidden latch
AYPC.W72.0205
AYPC.W72.0204

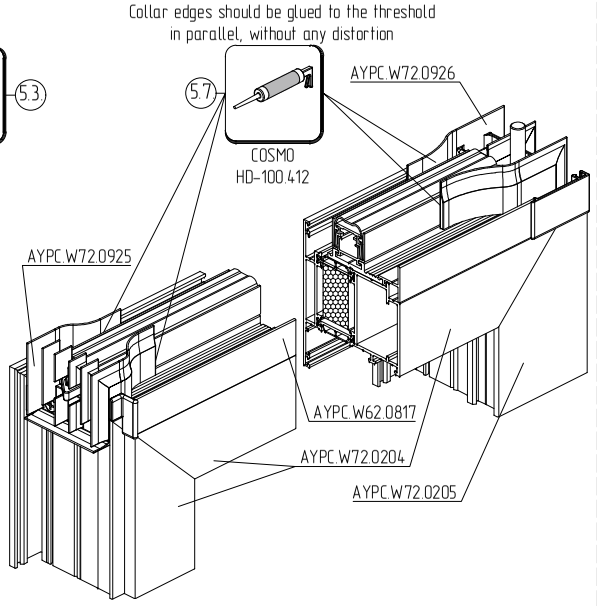
Collar edges should be glued to the threshold
in parallel, without any distortion
5.7
COSMO
HD-100.412
AYPC.W72.0926
AYPC.W72.0925
AYPC.W62.0817
AYPC.W72.0204
AYPC.W72.0205

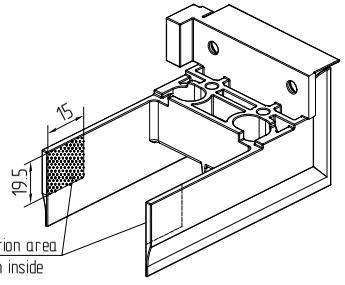
15
19.5
Glue application area
Apply from inside

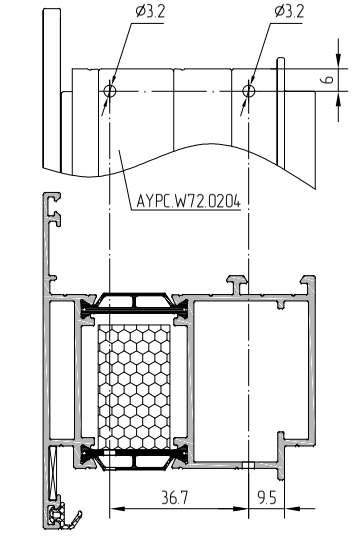
Machining of AYPC.W72.0204 leaf profile for EPDM
AYPC.W72.0925 collar installation
Ø3.2
Ø3.2
6
AYPC.W72.0204
36.7
9.5

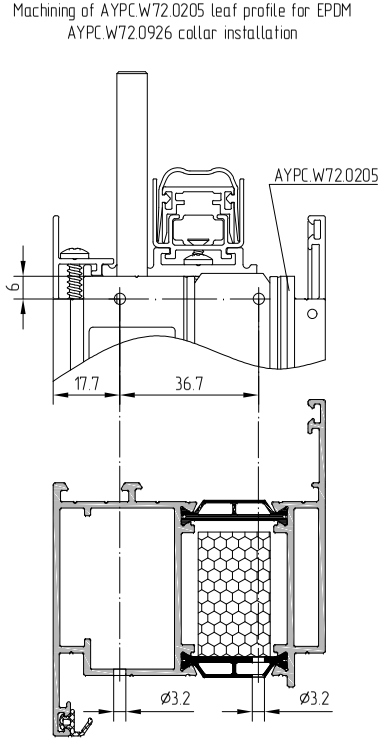
Machining of AYPC.W72.0205 leaf profile for EPDM
AYPC.W72.0926 collar installation
AYPC.W72.0205
6
17.7
36.7
Ø3.2
Ø3.2

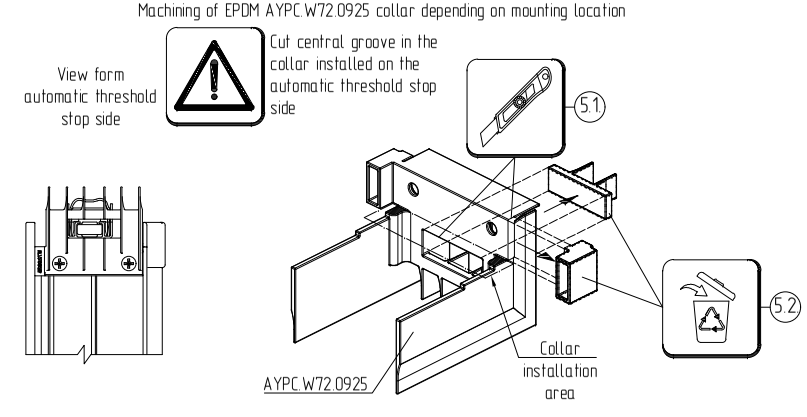
Machining of EPDM AYPC.W72.0925 collar depending on mounting location
View form
automatic threshold
stop side
Cut central groove in the
collar installed on the
automatic threshold stop
side
5.1
5.2
AYPC.W72.0925
Collar
installation
area

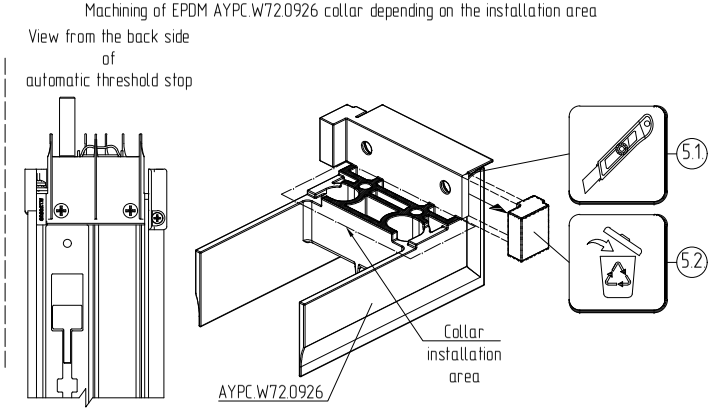
Machining of EPDM AYPC.W72.0926 collar depending on the installation area
View from the back side
of
automatic threshold stop
5.1
5.2
AYPC.W72.0926
Collar
installation
area

Installation sequence of automatic threshold on the active leaf

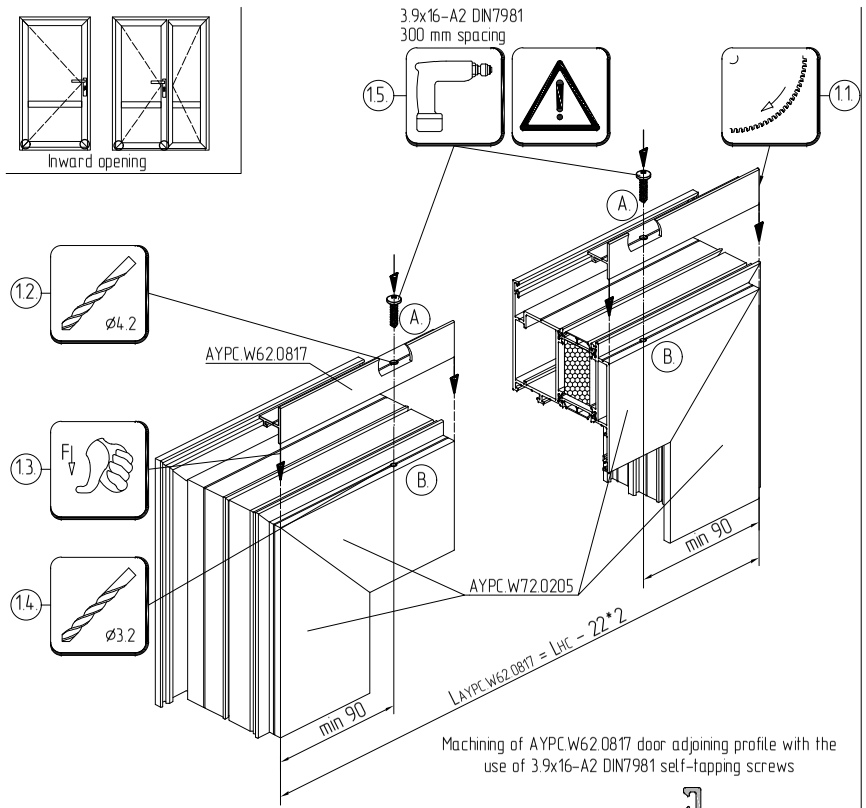

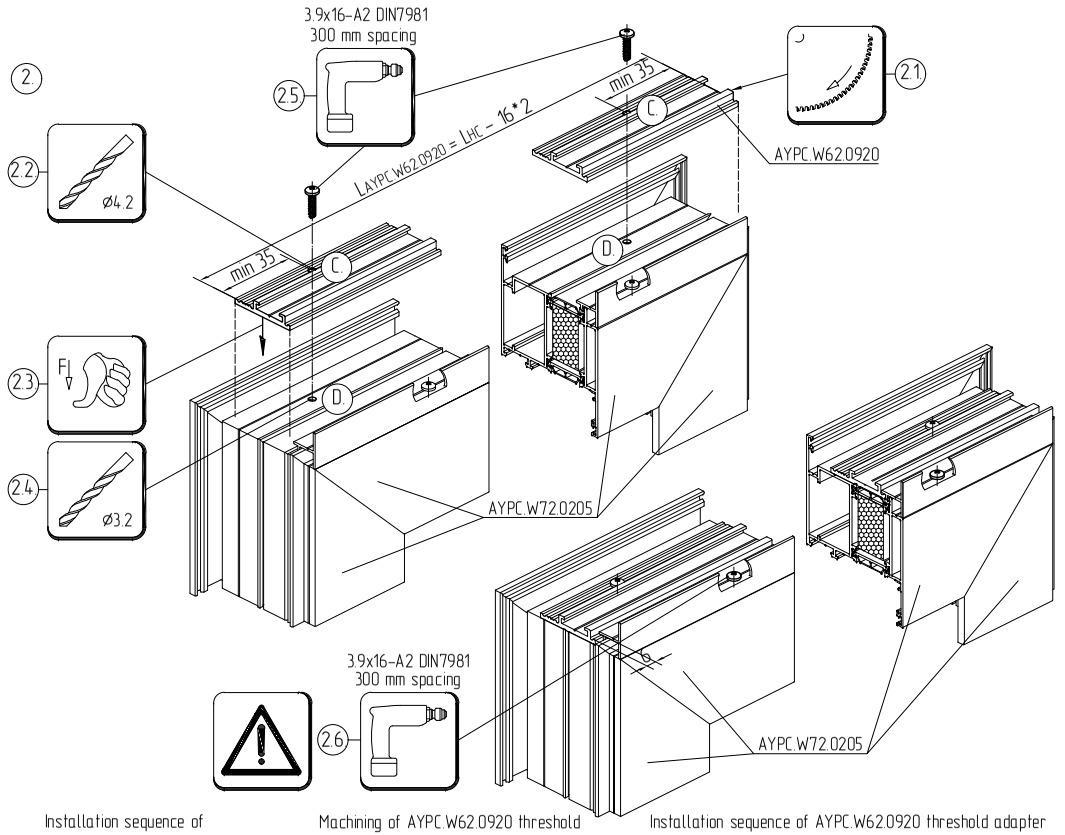

Machining of AYPC.W62.0817 door adjoining profile and AYPC.W72.0205 leaf

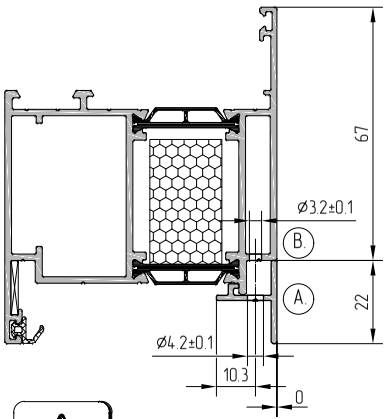

Machining of AYPC.W62.0817 door adjoining profile with the use of 3.9x16-A2 DIN7981 self-tapping screws

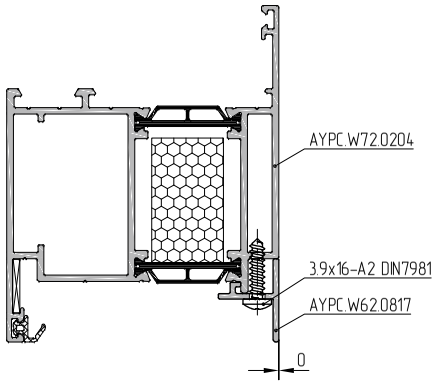

Machining of AYPC.W62.0817 door adjoining profile

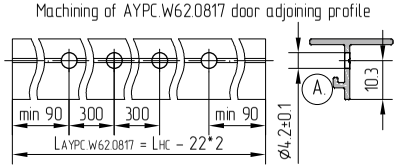

Do not tighten self-tapping screws!

Installation sequence of AYPC.W62.0920 threshold adapter

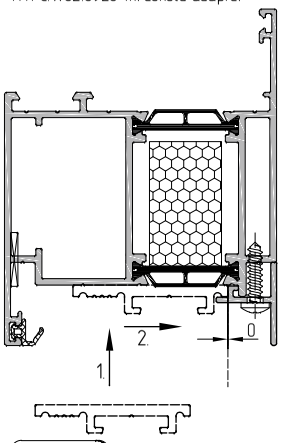

Machining of AYPC.W62.0920 threshold adapter and AYPC.W72.0205 leaf

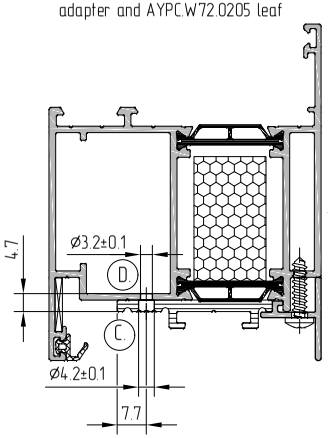

Installation sequence of AYPC.W62.0920 threshold adapter with the use of 3.9x16-A2 DIN7981 self-tapping screws

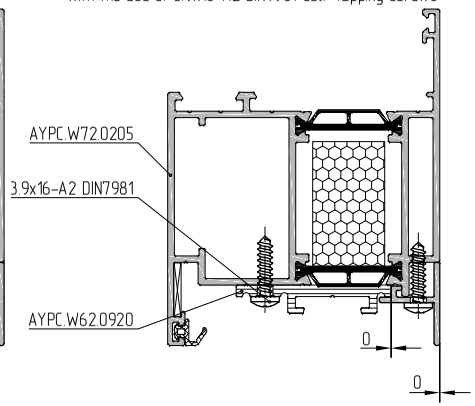

Tighten self-tapping screws!

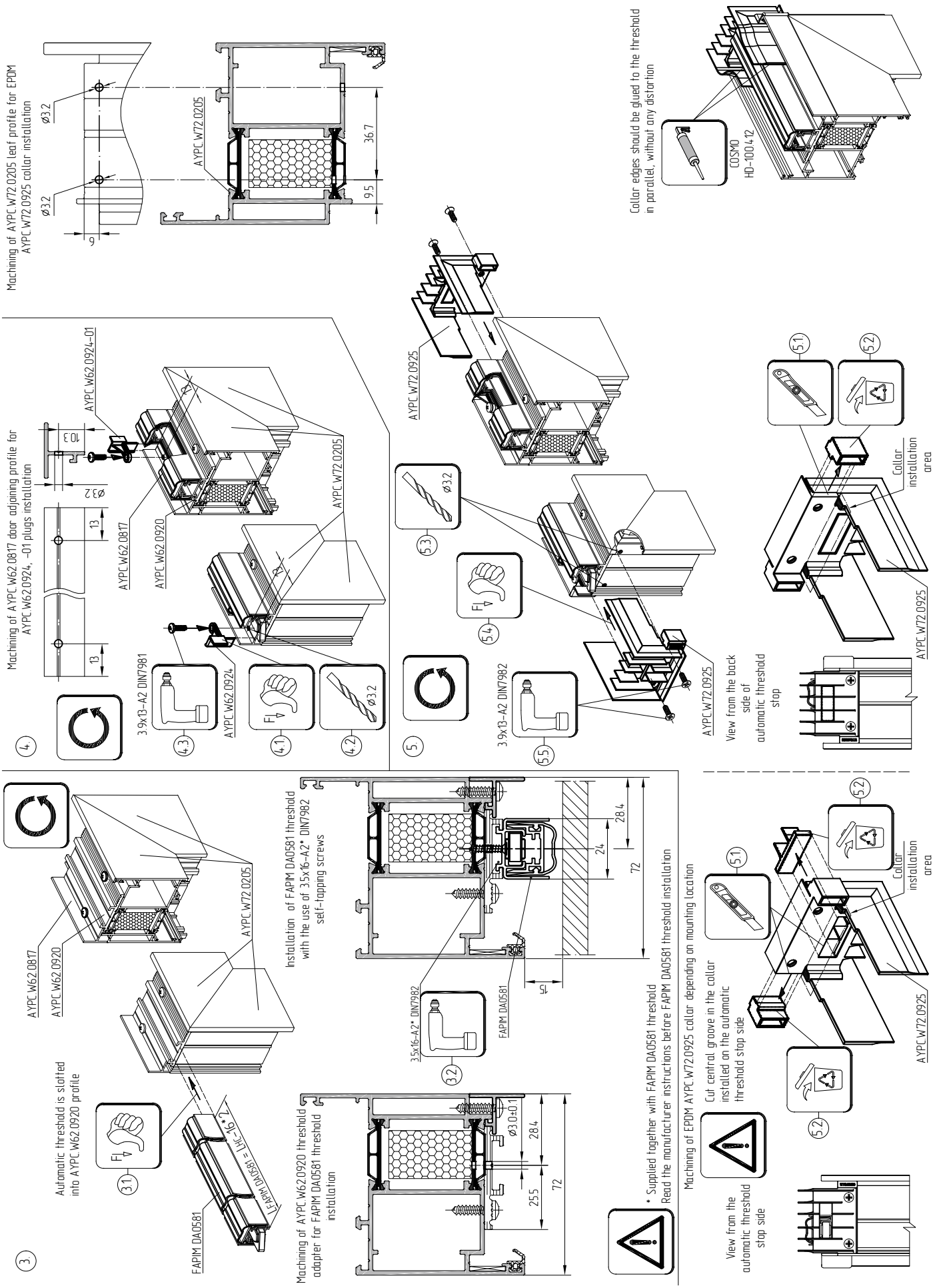
Machining of AYPC.W72.0205 leaf profile for EPDM
AYPC.W72.0925 collar installation
Ø3.2
Ø3.2
6
AYPC.W72.0205
36.7
9.5
Collar edges should be glued to the threshold
in parallel, without any distortion
COSMO
HD-100.412
Machining of AYPC.W62.0817 door adjoining profile for
AYPC.W62.0924, -01 plugs installation
AYPC.W62.0924-01
10.3
Ø3.2
13
13
AYPC.W62.0817
AYPC.W62.0920
AYPC.W72.0205
3.9x13-A2 DIN7981
AYPC.W62.0924
Ø3.2
4
4.3
4.1
4.2
AYPC.W72.0925
Ø3.2
5.3
5.4
5
3.9x13-A2 DIN7982
5.5
AYPC.W72.0925
View from the back
side of
automatic threshold
stop
5.1
5.2
Collar
installation
area
AYPC.W72.0925
Automatic threshold is slotted
into AYPC.W62.0920 profile
3.1
AYPC.W62.0817
AYPC.W62.0920
AYPC.W72.0205
FAPIM DA0581
FAPIM DA0581 = LHC-16*2
Installation of FAPIM DA0581 threshold
with the use of 3.5x16-A2* DIN7982
self-tapping screws
3.2
3.5x16-A2* DIN7982
FAPIM DA0581
15
24
28.4
72
Machining of AYPC.W62.0920 threshold
adapter for FAPIM DA0581 threshold
installation
Ø3.0±0.1
28.4
25.5
72
* Supplied together with FAPIM DA0581 threshold
Read the manufacturer instructions before FAPIM DA0581 threshold installation
Machining of EPDM AYPC.W72.0925 collar depending on mounting location
Cut central groove in the collar
installed on the automatic
threshold stop side
View from the
automatic threshold
stop side
5.1
5.2
Collar
installation
area
AYPC.W72.0925
5.2

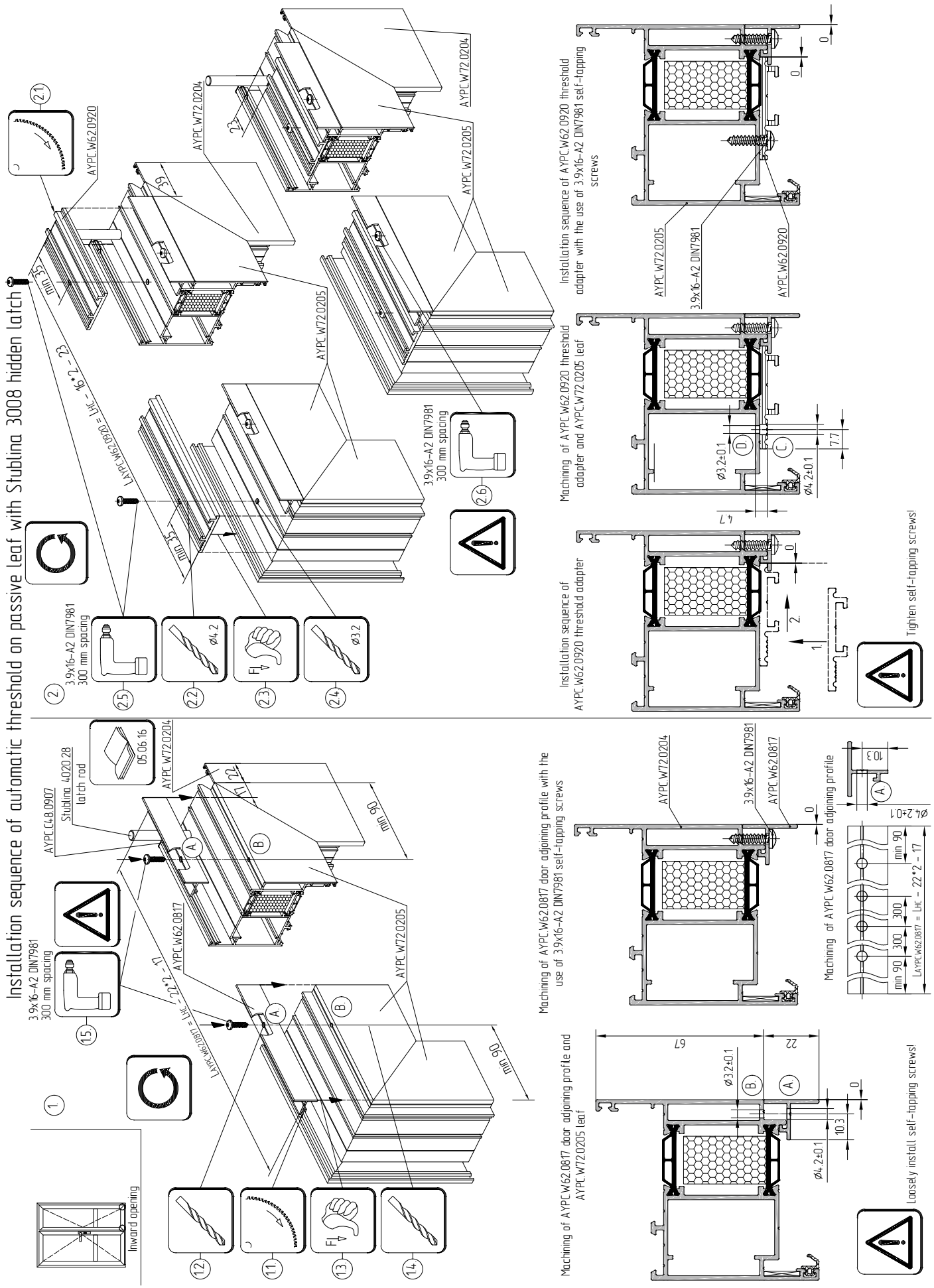
Installation sequence of automatic threshold on passive leaf with Stublina 3008 hidden latch
Inward opening
AYPC W62 0920
AYPC W72 0204
AYPC W72 0205
3.9x16–A2 DIN7981
300 mm spacing
Ø4.2
Ø3.2
AYPC C48 0907
Stublina 4020.28
latch rod
05.06.16
AYPC W62 0817
min 90
min 35
Installation sequence of AYPC W62 0920 threshold adapter with the use of 3.9x16–A2 DIN7981 self-tapping screws
Machining of AYPC W62 0920 threshold adapter and AYPC W72 0205 leaf
Installation sequence of AYPC W62 0920 threshold adapter
Tighten self-tapping screws!
Machining of AYPC W62 0817 door adjoining profile with the use of 3.9x16–A2 DIN7981 self-tapping screws
Machining of AYPC W62 0817 door adjoining profile
Machining of AYPC W62 0817 door adjoining profile and AYPC W72 0205 leaf
Loosely install self-tapping screws!

3.

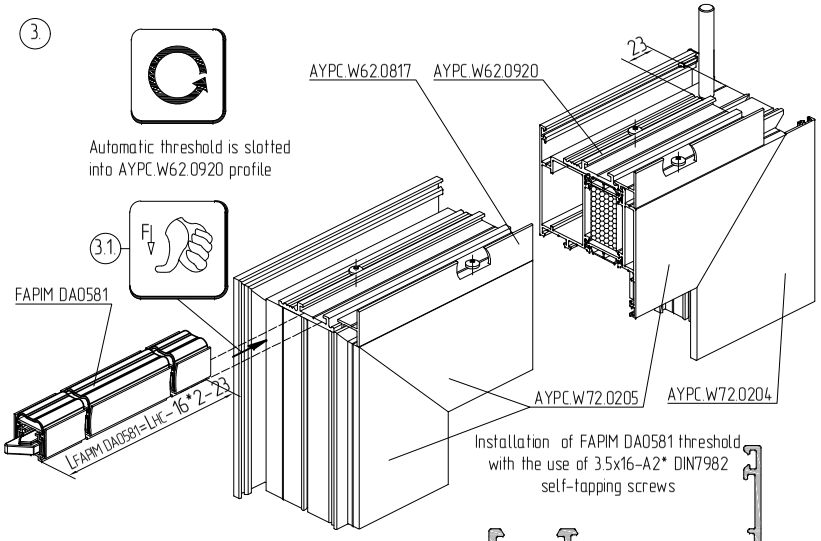

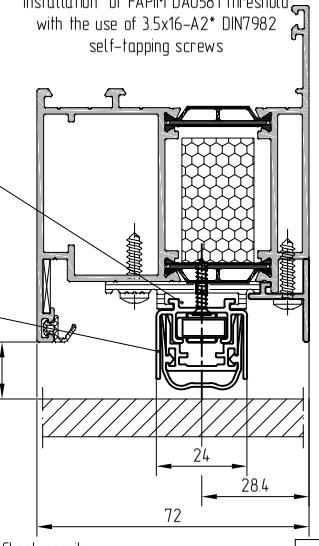

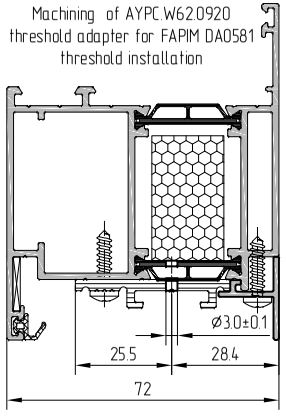

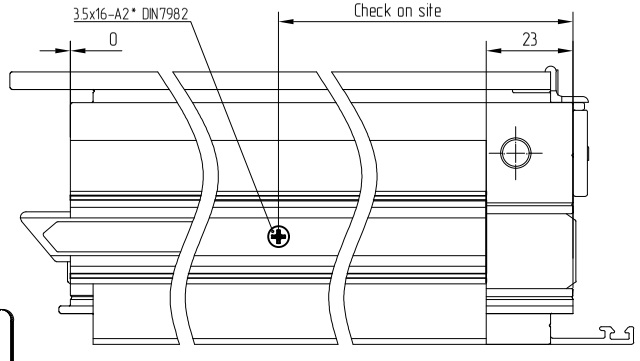

* Supplied together with FAPIM DA0581 threshold.
Read the manufacturer instructions before FAPIM DA0581 threshold installation

4.

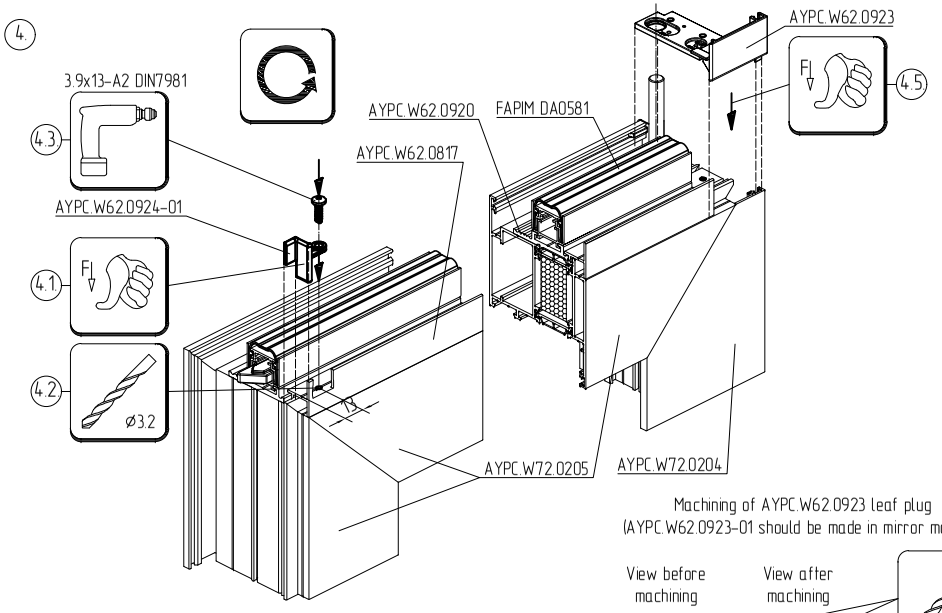

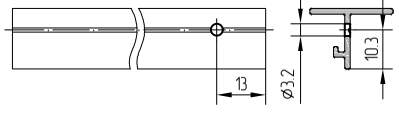

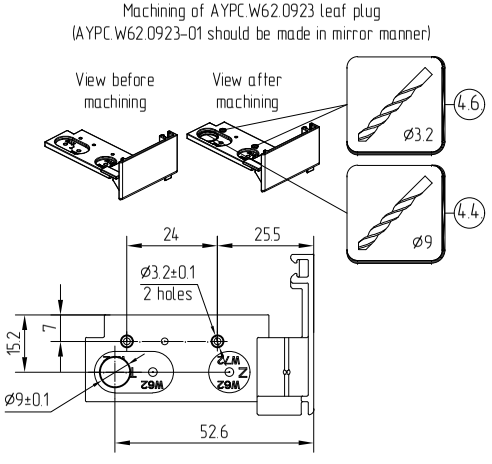

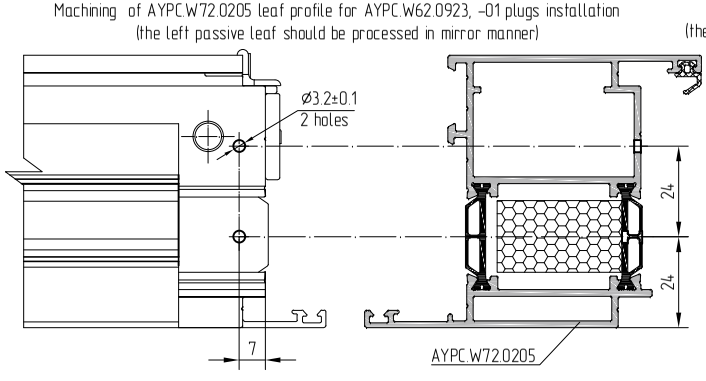

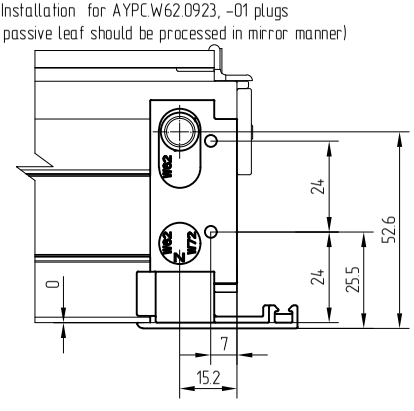

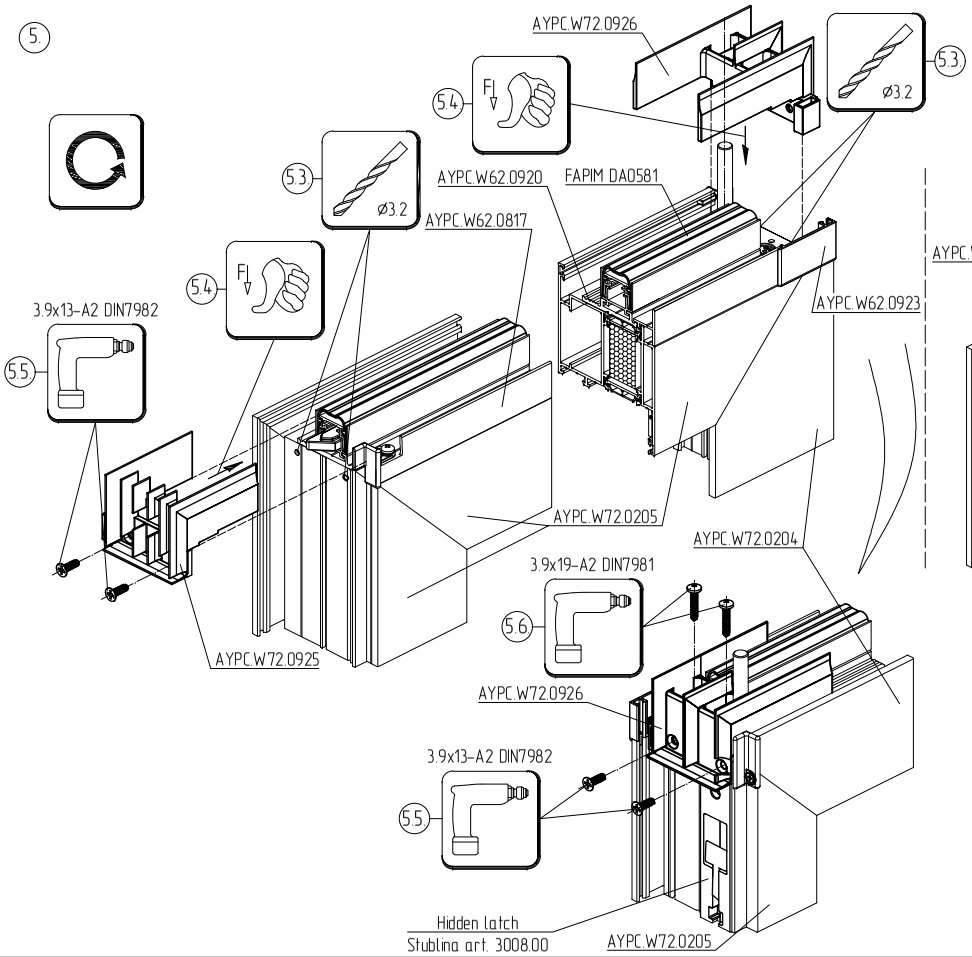
5.
AYPC.W72.0926
5.4
5.3
ø3.2
AYPC.W62.0920
FAPIM DA0581
AYPC.W62.0817
AYPC.W62.0923
3.9x13-A2 DIN7982
5.5
AYPC.W72.0205
AYPC.W72.0204
3.9x19-A2 DIN7981
5.6
AYPC.W72.0925
AYPC.W72.0926
3.9x13-A2 DIN7982
Hidden latch
Stublina art. 3008.00
AYPC.W72.0205

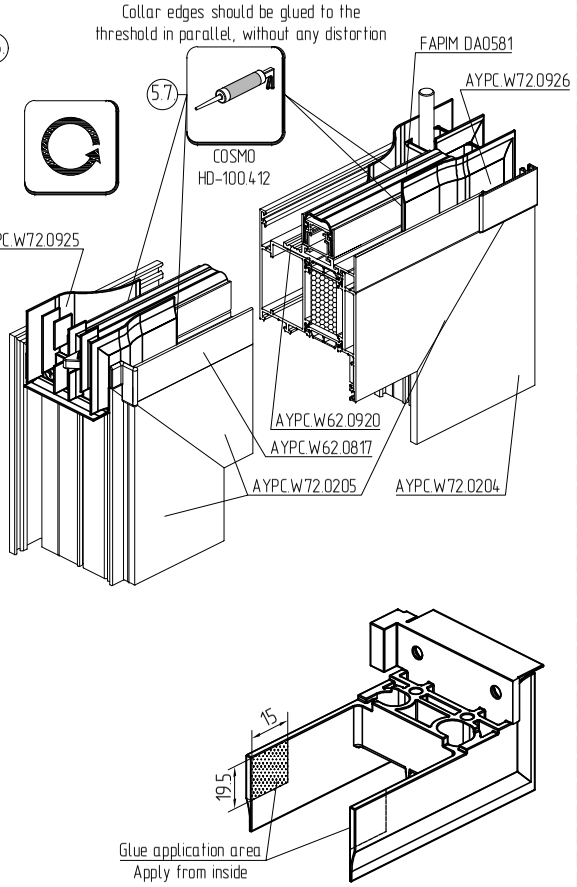
Collar edges should be glued to the threshold in parallel, without any distortion
5.7
COSMO HD-100.412
FAPIM DA0581
AYPC.W72.0926
AYPC.W72.0925
AYPC.W62.0920
AYPC.W62.0817
AYPC.W72.0205
AYPC.W72.0204
15
19.5
Glue application area
Apply from inside

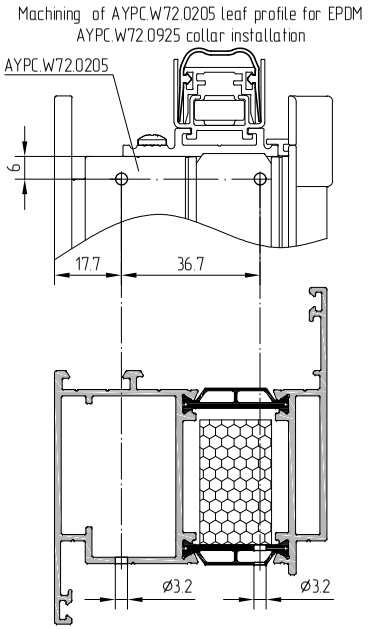
Machining of AYPC.W72.0205 leaf profile for EPDM AYPC.W72.0925 collar installation
AYPC.W72.0205
6
17.7
36.7
ø3.2
ø3.2

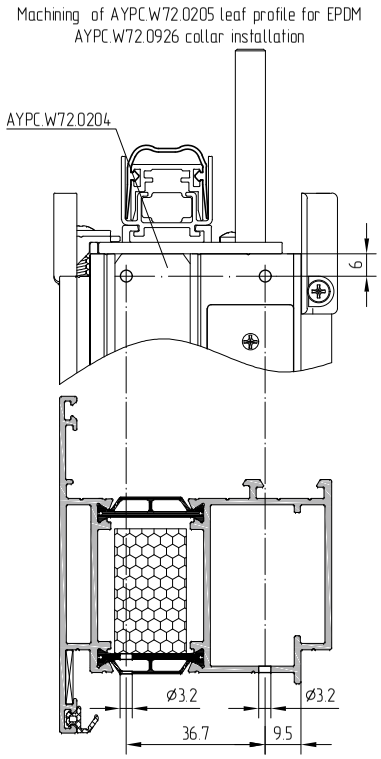
Machining of AYPC.W72.0205 leaf profile for EPDM AYPC.W72.0926 collar installation
AYPC.W72.0204
6
ø3.2
ø3.2
36.7
9.5

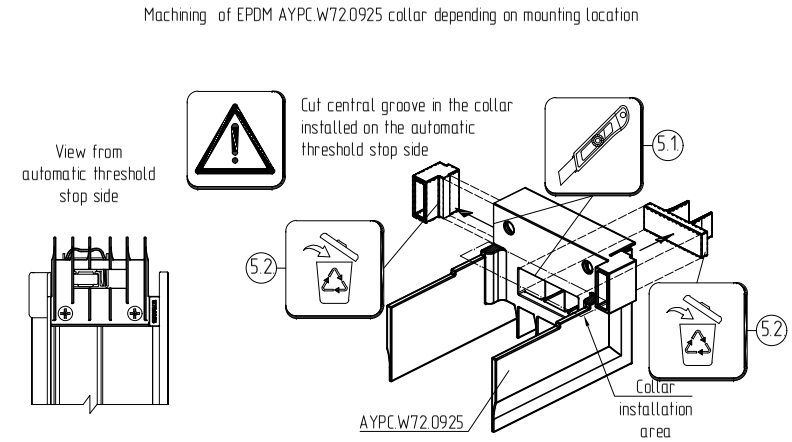
Machining of EPDM AYPC.W72.0925 collar depending on mounting location
View from automatic threshold stop side
Cut central groove in the collar installed on the automatic threshold stop side
5.1
5.2
5.2
AYPC.W72.0925
Collar installation area

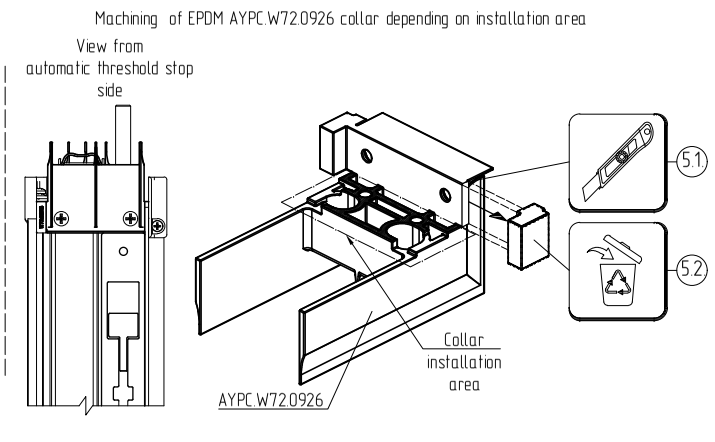
Machining of EPDM AYPC.W72.0926 collar depending on installation area
View from automatic threshold stop side
5.1
5.2
Collar installation area
AYPC.W72.0926

Installation of automatic threshold on passive leaf with Fuhr BK345K24A cut-in latch

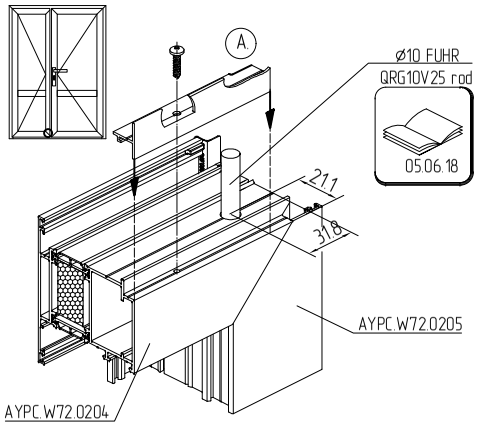

Additional machining of AYPC.W62.0817 leaf adjoining profile

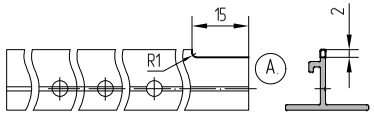

For main machining and installation, see pages 05.06.06–06.08

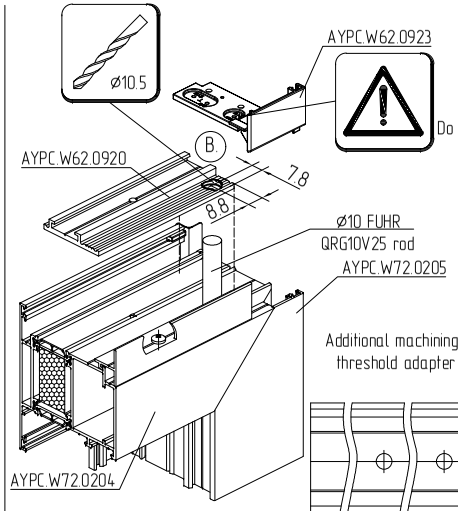

Additional machining of AYPC.W62.0920 threshold adapter for Fuhr latch rod

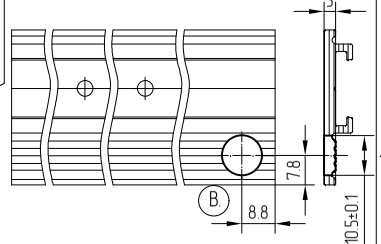

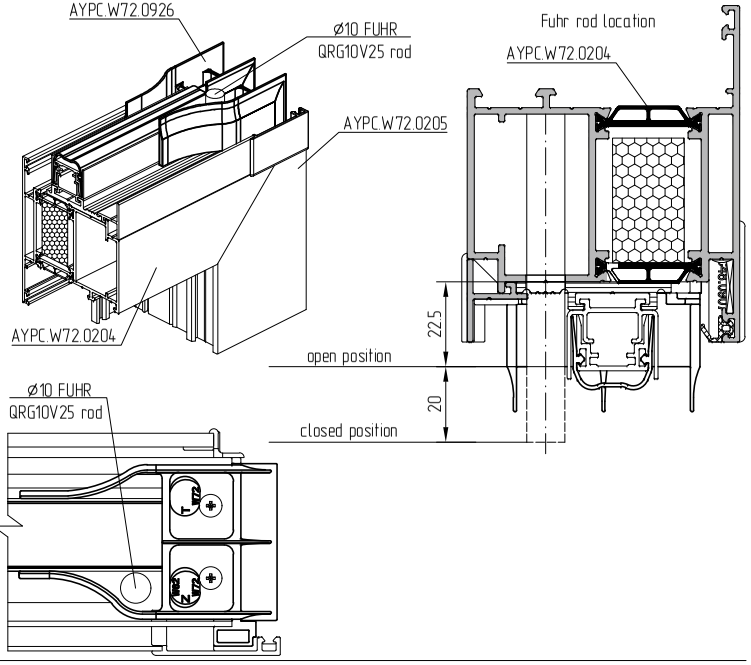

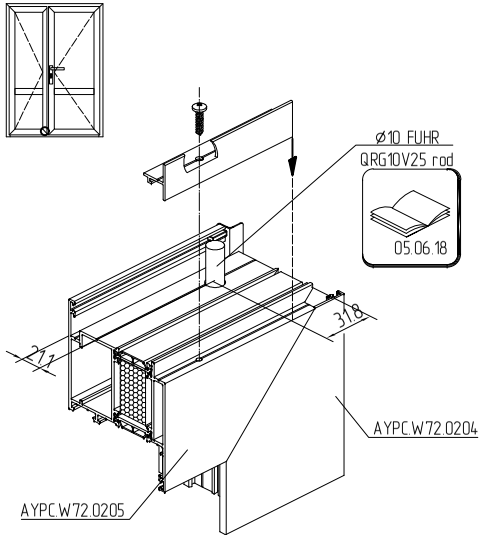

For main machining and installation, see pages 05.06.11–06.13

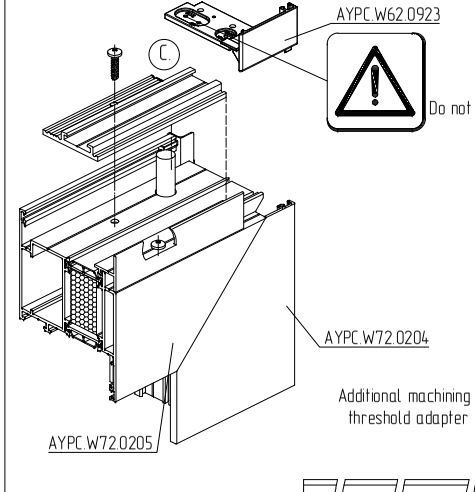

Additional machining of AYPC.W62.0920 threshold adapter for Fuhr latch rod

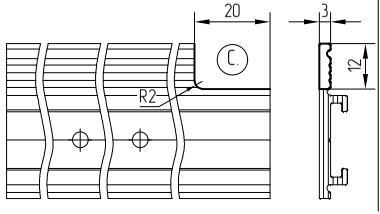

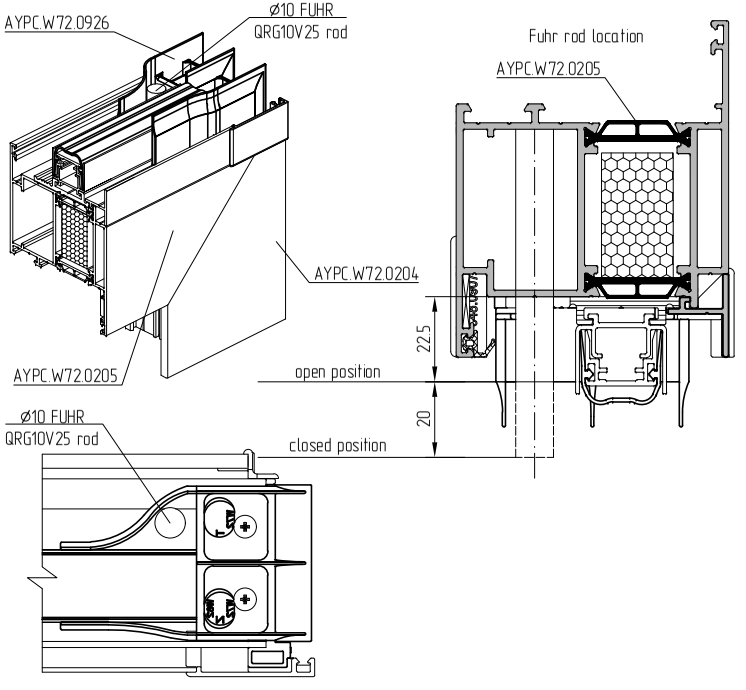

ALUTECH PROFILE SYSTEMS

Assemblage sequence of corner connection No13 for the leaf and basement profiles

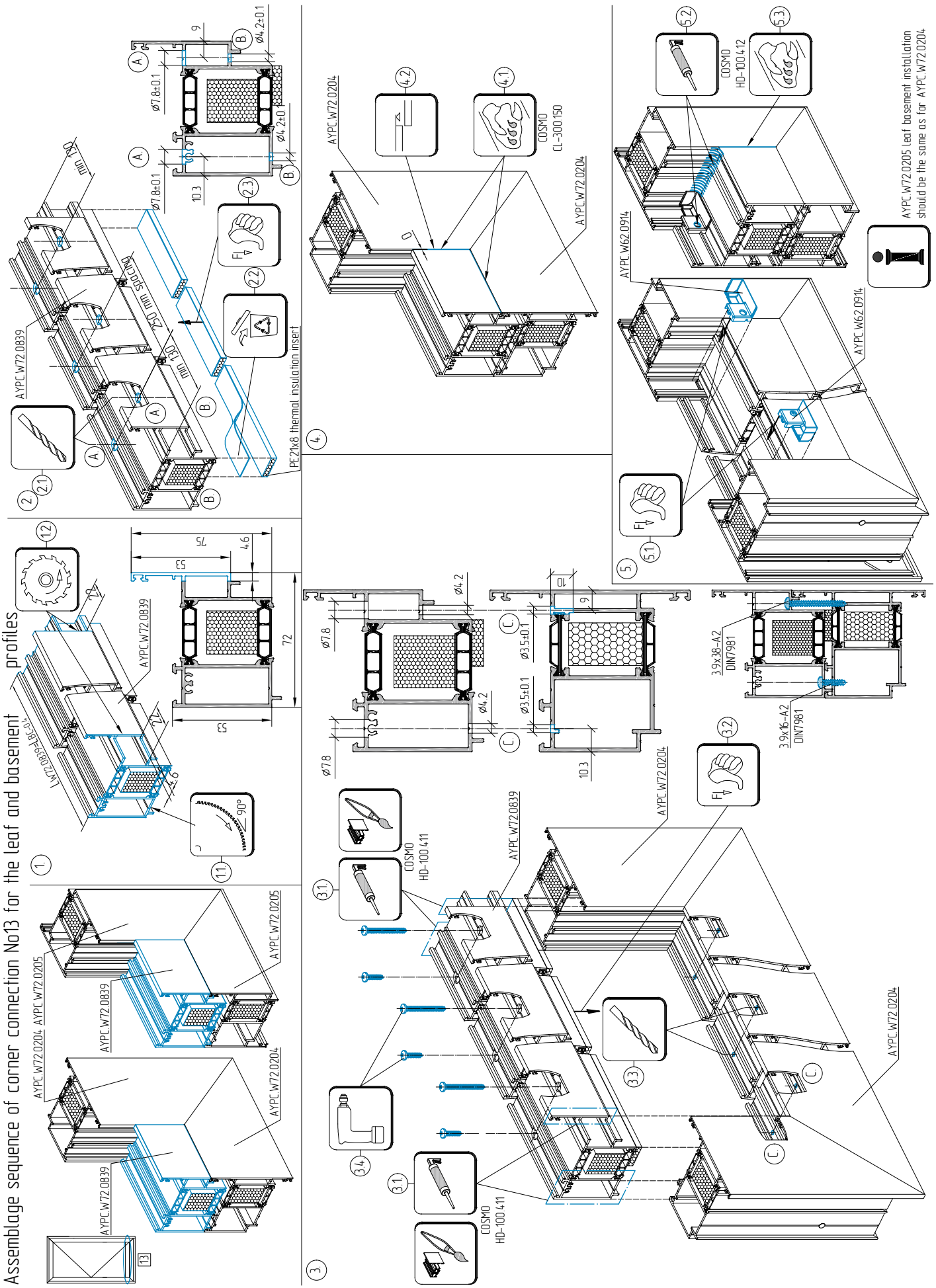

ALUTECH ALT W72 | Windows and doors with thermal break

05.06.15

Machining example of leaf profiles for Stublina 3008.00 hidden latch installation with Stublina 3021.00 / 3031.00 locks

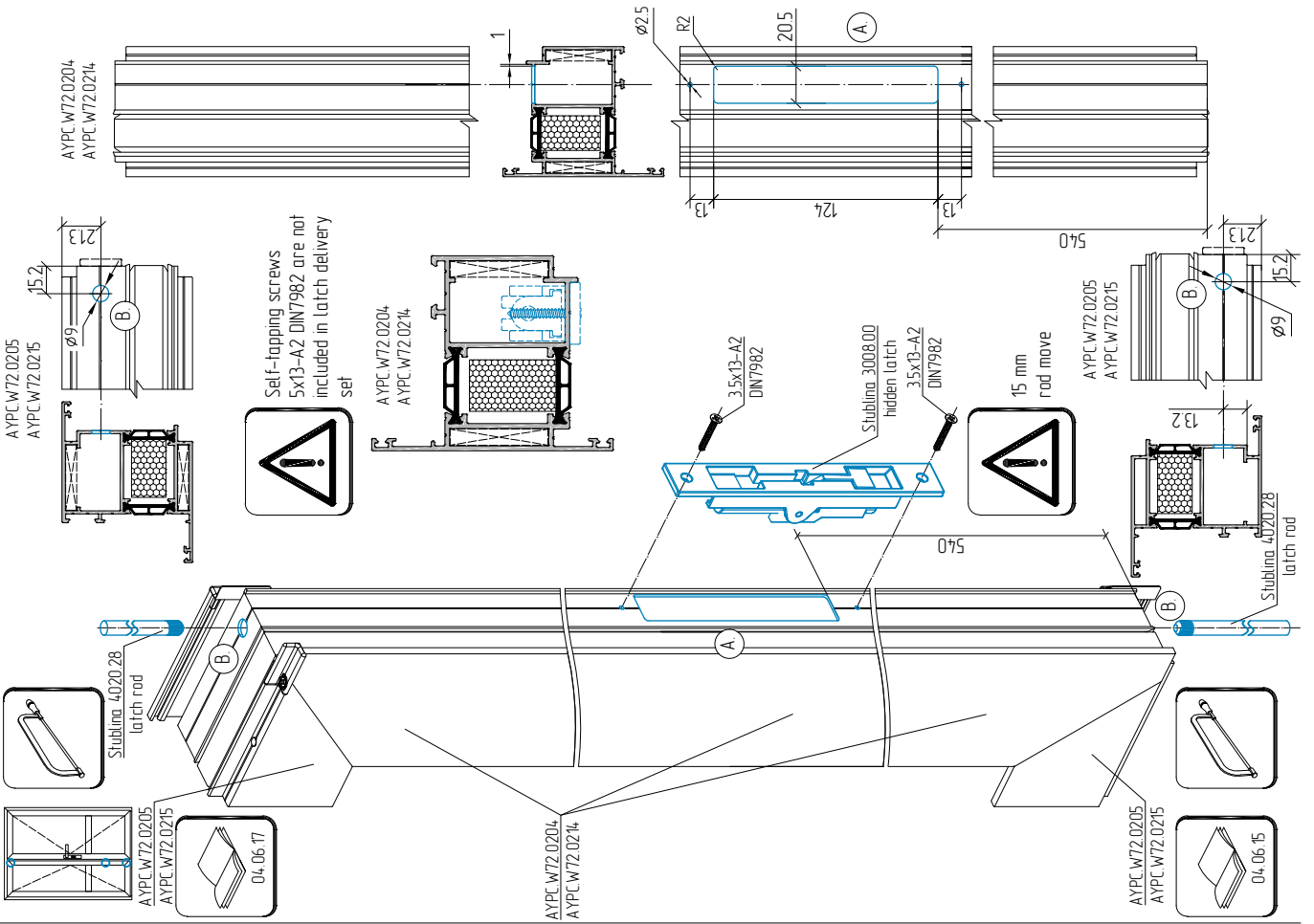

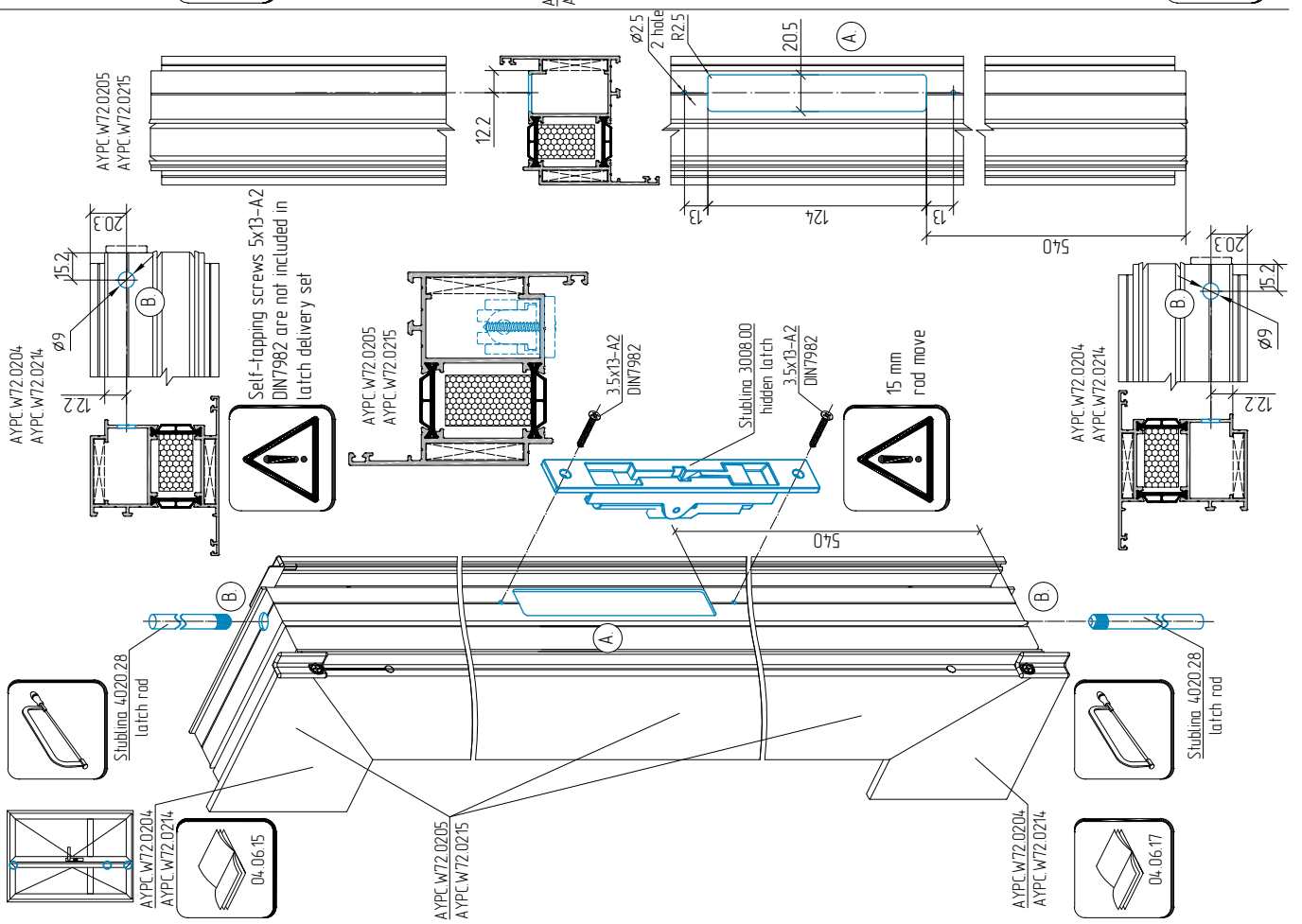

Machining example of profiles for 3012.00 upper strike plate installation and Giesse 02144 threshold strike plate

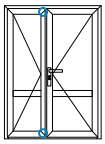

outward opening

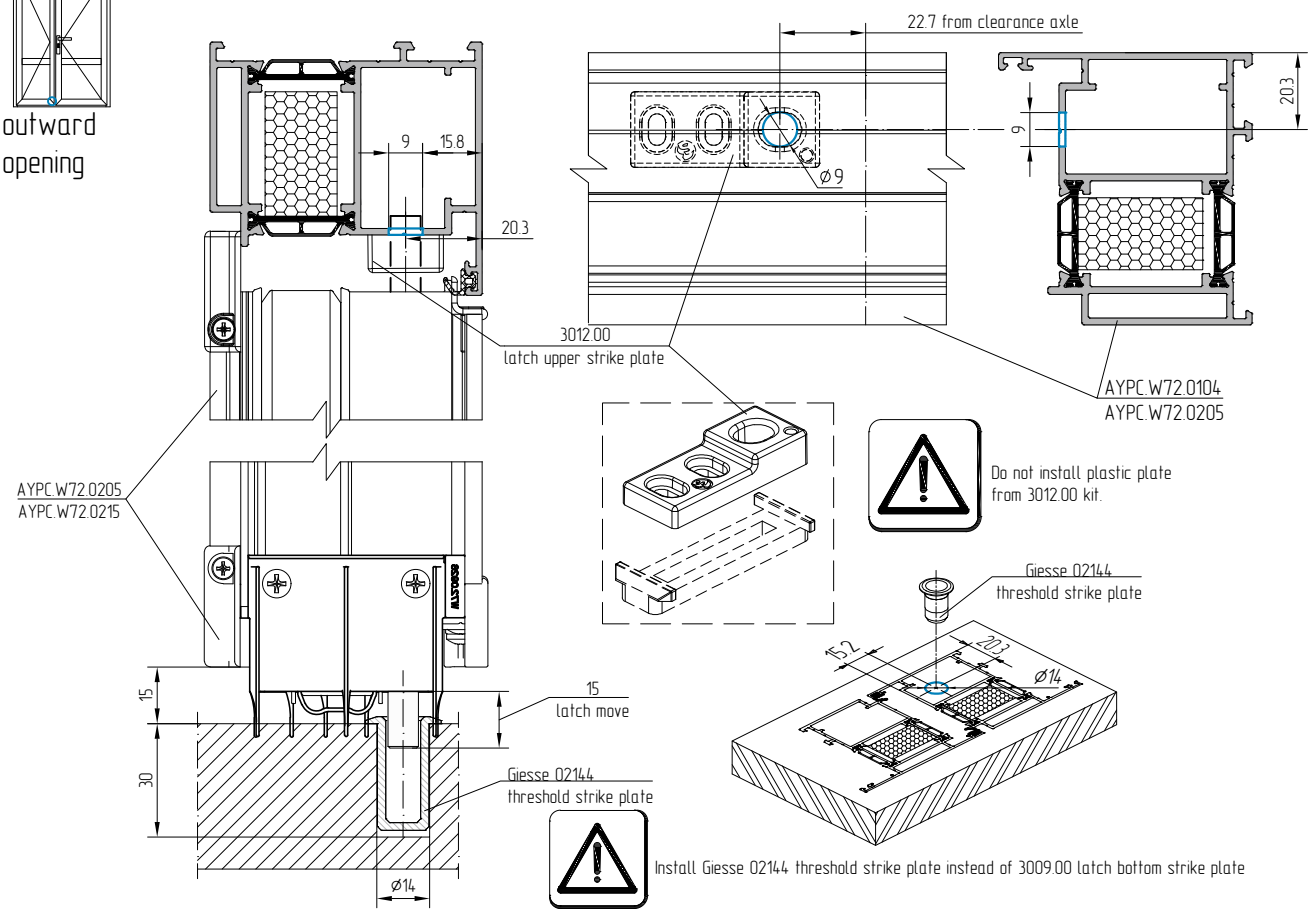

inward opening

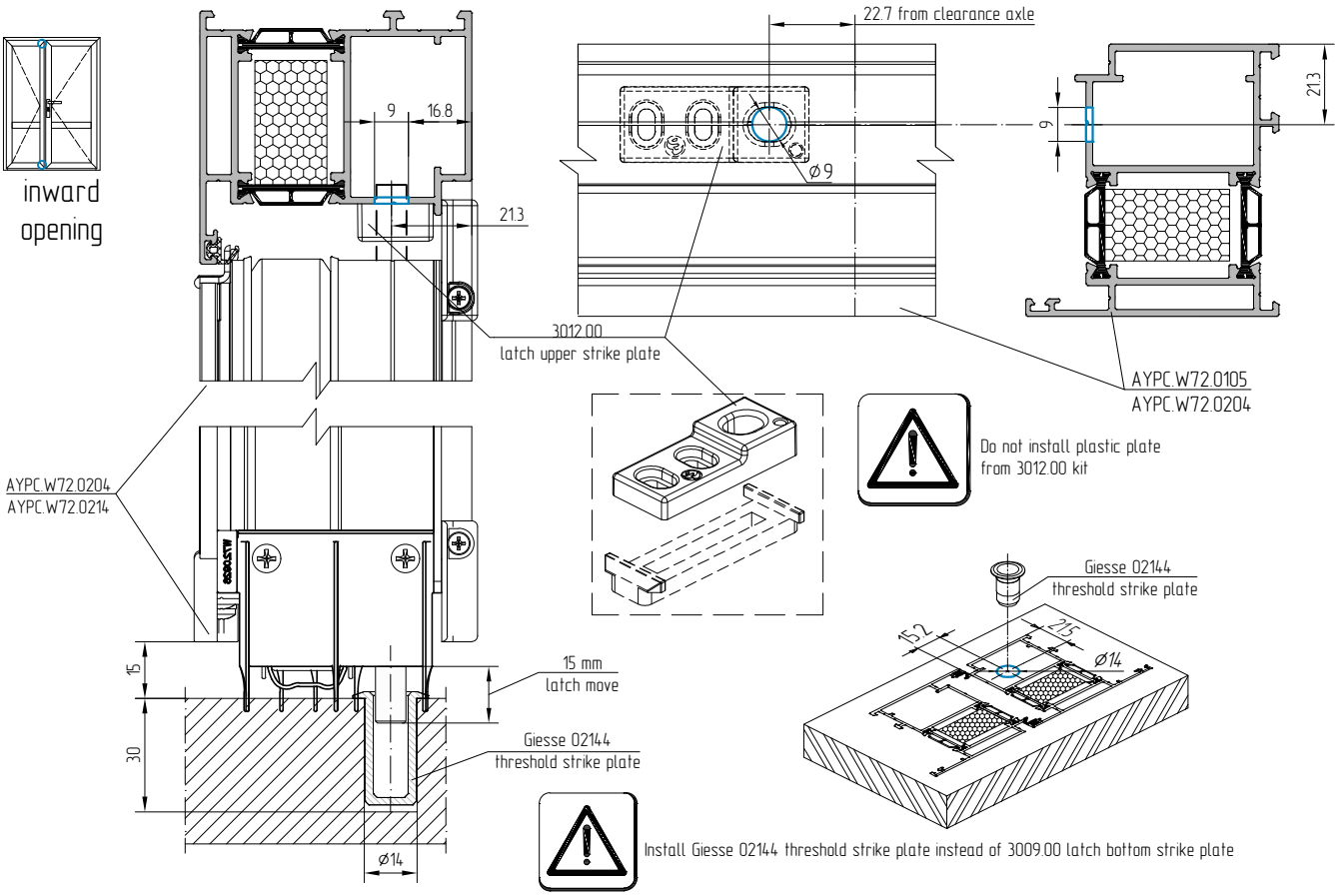

Example of Fuhr BK345K24A cut-in latch, Ø10 QRG10V25 rod, RS76558N rod guide installation and profile machining

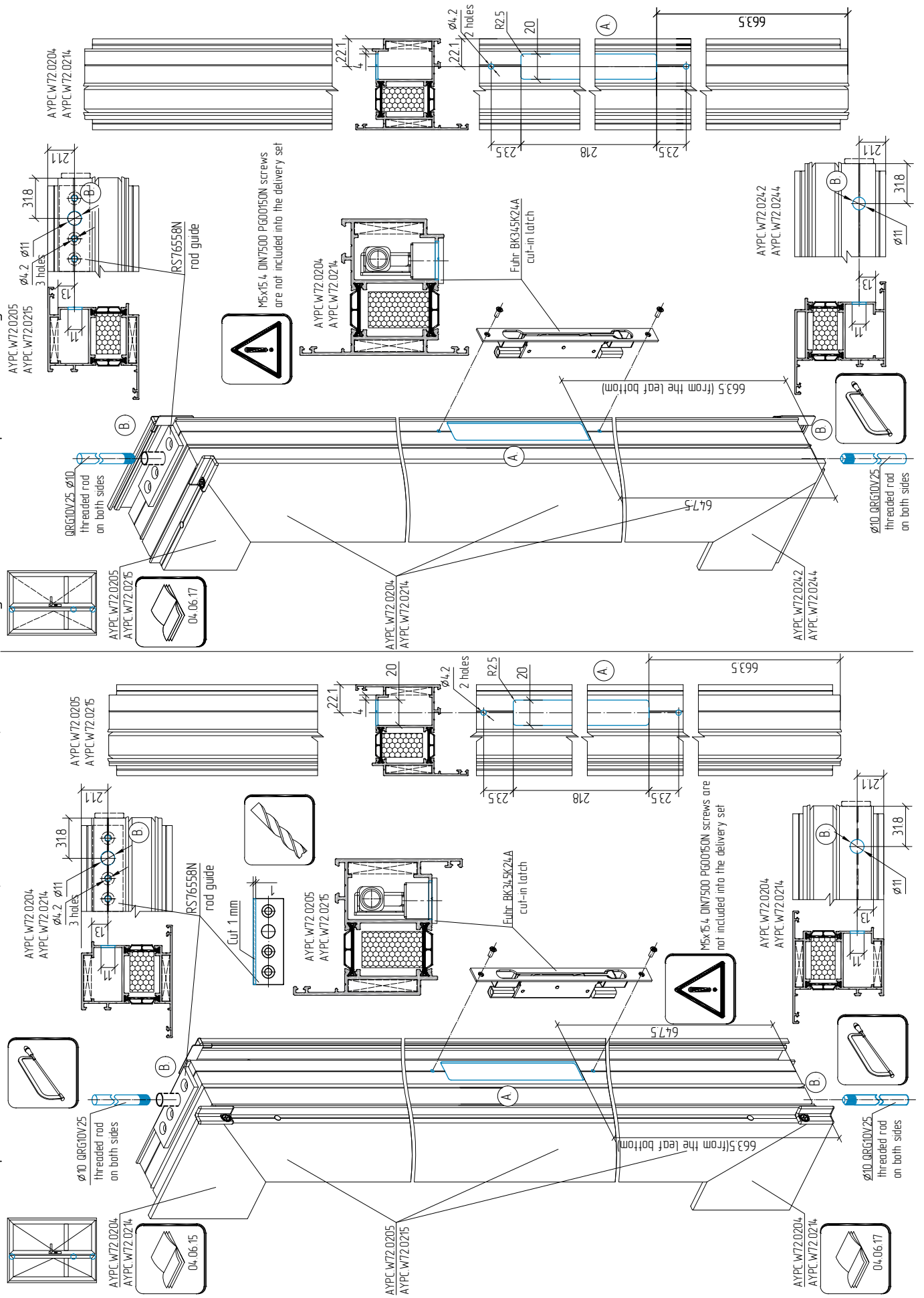

Profiles machining example for the installation of RNR58610 upper strike plate into the frame and ZB927A latch bottom strike plate to BK345K24A cut-in latch

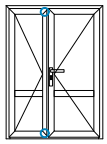

outward opening

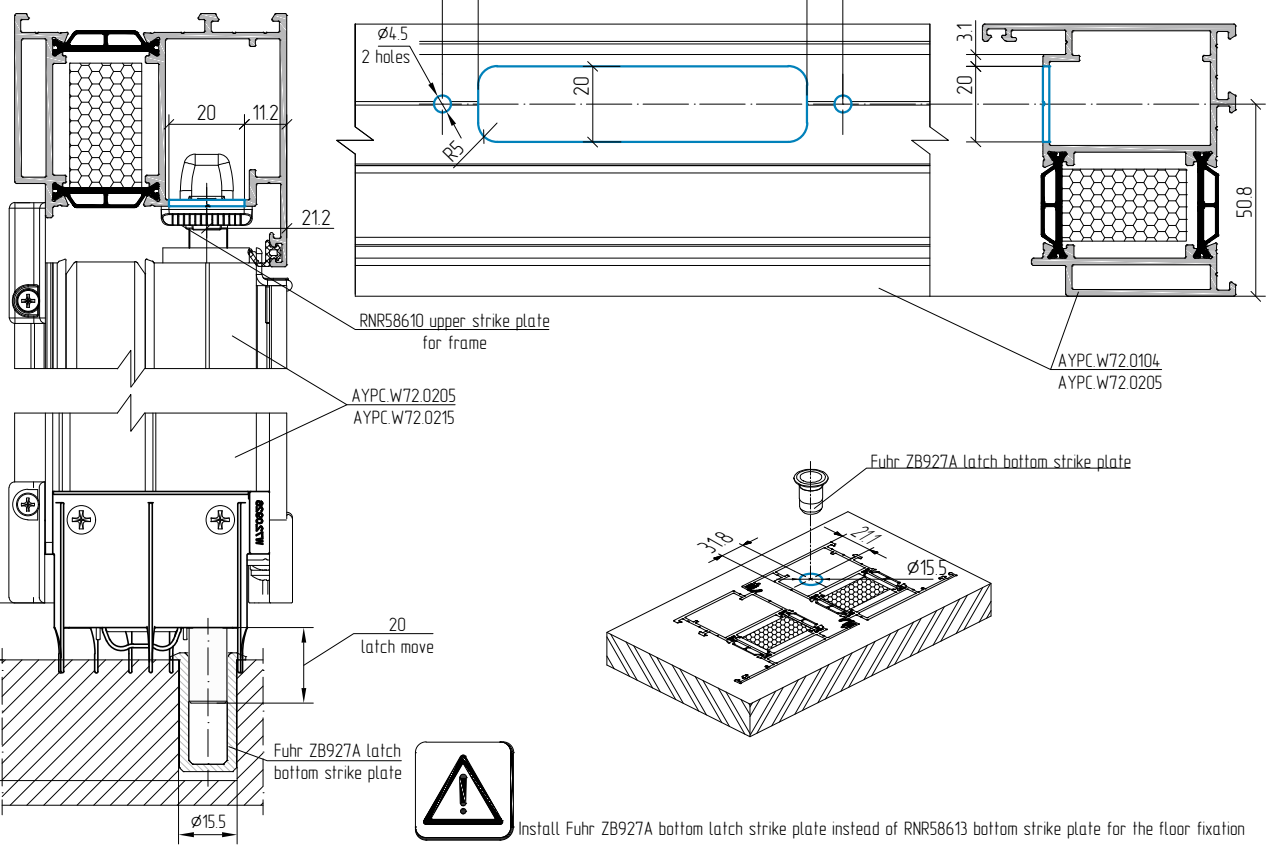

Install Fuhr ZB927A bottom latch strike plate instead of RNR58613 bottom strike plate for the floor fixation

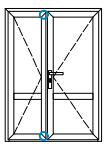

inward opening

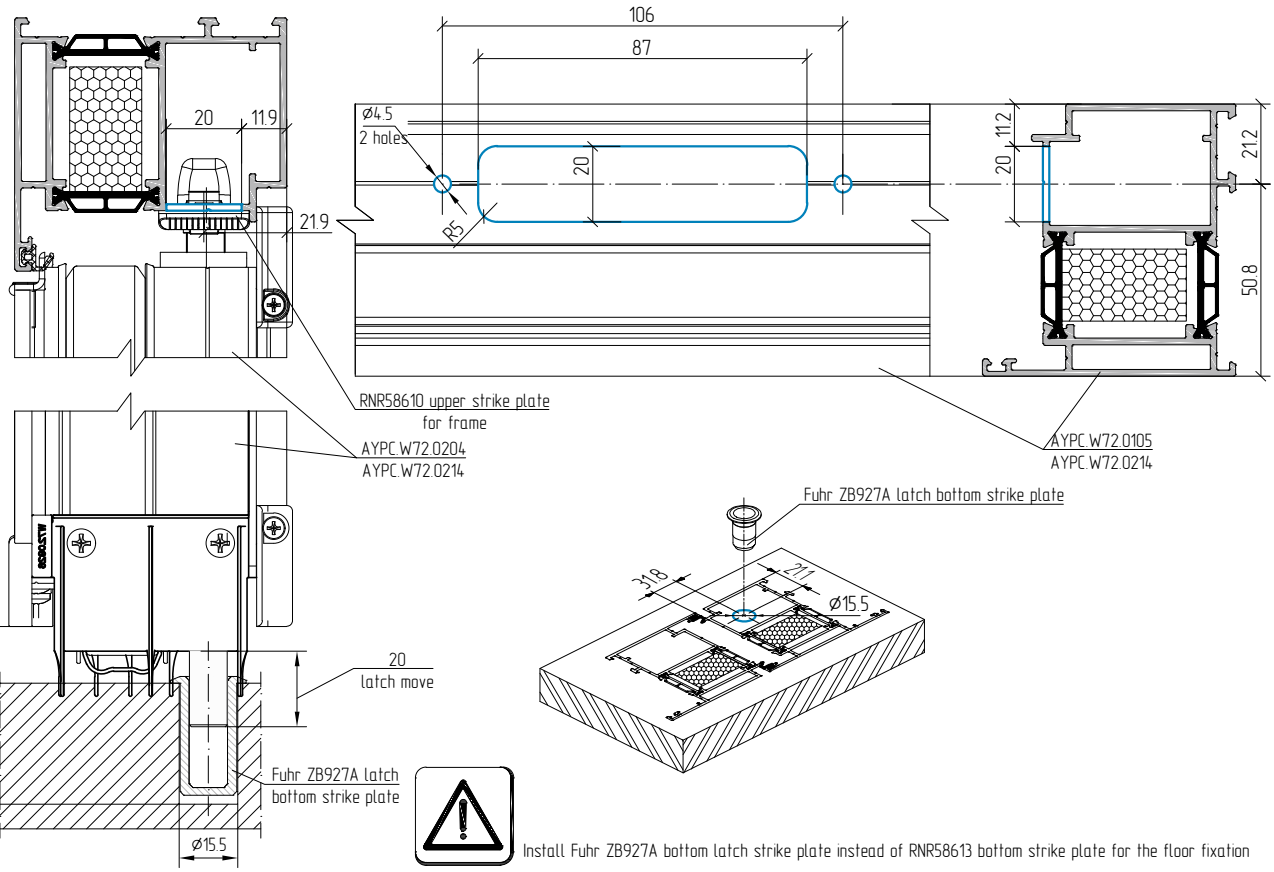

Install Fuhr ZB927A bottom latch strike plate instead of RNR58613 bottom strike plate for the floor fixation

ALUTECH ALTW72
Windows and doors
with thermal break

INTEGRATED DOORS

06.01.01 System description

06.02.01 Order information

06.03.01 Accessories

06.04.01 Table of glazing

06.05.01 Sections and junctions

06.06.01 Examples of standard system calculation

06.07.01 Machining and assemblage

06.08.01 Statics

W72 door series integrated into curtain walling

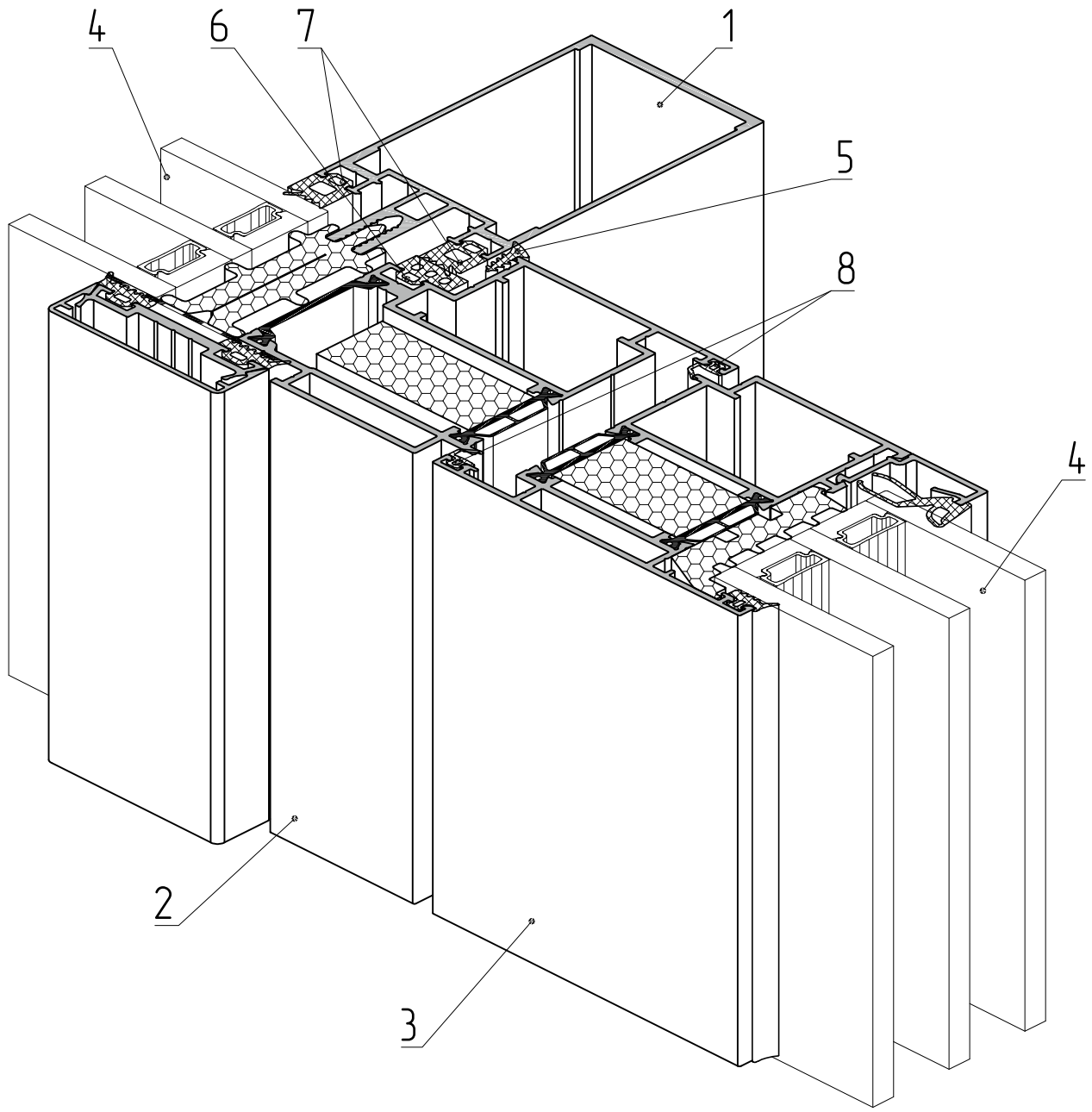

1 – AYPC.F50.0103 mullion profile
2 – AYPC.W72.0137 frame profile
3 – AYPC.W72.0204 leaf profile
4 – 50 mm infill unit
5 – FRK38 rubber gasket
6 – FRK129 rubber gasket
7 – FRK17 rubber gasket
8 – FRK98 rubber gasket

Article	Name / Image	Weight, kg/m	Exterior perimeter, mm	Cross sectional area, mm²	Code	Profile colour	Bar length, m	Quantity in pack of		Weight of a pack	
								pcs	m	net, kg	gross, kg
AYPC.W72.0136E	Frame profile 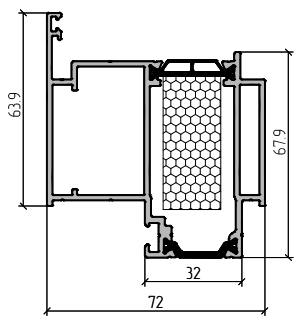	2.00	385.6	790.8	10929121 10929124 10929130 10929131 109291808	RAL9016 RAL8014 RAL8017 RAL9006 A00-D6	6.5	2	13	26.7 26.7 26.7 26.7 25.9	27.2 27.2 27.2 27.2 26.4
AYPC.W72.0136NE	Frame profile 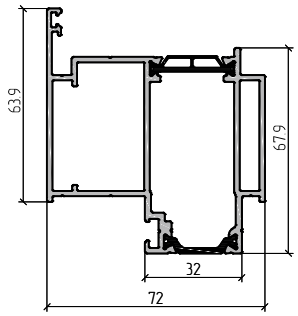	1.97	385.6	790.8	10933200 10933221 10933224 10933230 10933231 109332808	00 RAL9016 RAL8014 RAL8017 RAL9006 A00-D6	6.5	2	13	25.6 26.4 26.4 26.4 26.4 25.6	26.1 26.9 26.9 26.9 26.9 26.1
AYPC.W72.0137E	Frame profile 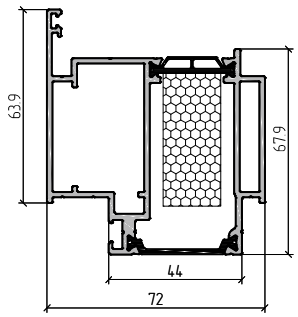	2.05	385.8	831.2	10929221 10929224 10929230 10929231 109292808	RAL9016 RAL8014 RAL8017 RAL9006 A00-D6	6.5	2	13	27.5 27.5 27.5 27.5 26.6	28.0 28.0 28.0 28.0 27.2
AYPC.W72.0137NE	Frame profile 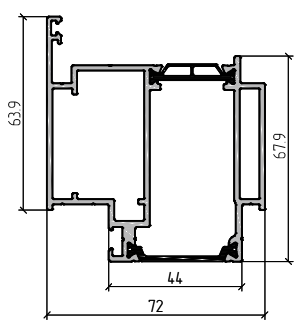	2.03	385.8	831.2	10933300 10933321 10933324 10933330 10933331 109333808	00 RAL9016 RAL8014 RAL8017 RAL9006 A00-D6	6.5	2	13	26.4 27.2 27.2 27.2 27.2 26.4	26.9 27.7 27.7 27.7 27.7 26.9
AYPC.W72.0138E	Frame profile 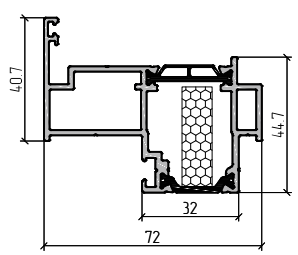	1.52	338.8	621.0	10928221 10928224 10928230 10928231 109282808	RAL9016 RAL8014 RAL8017 RAL9006 A00-D6	6.5	2	13	19.8 20.4 20.4 20.4 20.4 19.8	20.2 20.8 20.8 20.8 20.8 20.8

Article	Name / Image	Weight, kg/m	Exterior perimeter, mm	Cross sectional area, mm²	Code	Profile colour	Bar length, m	Quantity in pack of		Weight of a pack	
								pcs	m	net, kg	gross, kg
AYPC.W72.0138NE	Frame profile 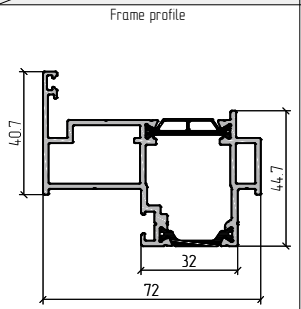	1.51	338.8	621.0	10933400 10933421 10933424 10933430 10933431 109334808	00 RAL9016 RAL8014 RAL8017 RAL9006 A00–D6	6.5	2	13	19.7 20.3 20.3 20.3 20.3 19.7	20.1 20.7 20.7 20.7 20.7 20.1
AYPC.W72.0139E	Frame profile 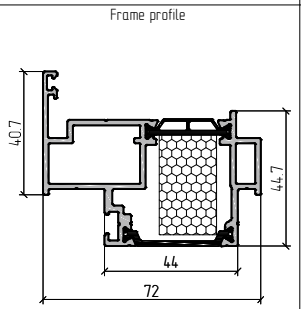	1.55	313.8	649.1	10928321 10928324 10928330 10928331 109283808	RAL9016 RAL8014 RAL8017 RAL9006 A00–D6	6.5	2	13	20.8 20.8 20.8 20.8 20.2	21.2 21.2 21.2 21.2 20.6
AYPC.W72.0139NE	Frame profile 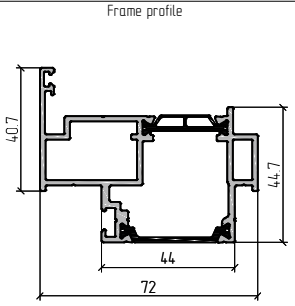	1.54	313.8	649.1	10933500 10933521 10933524 10933530 10933531 109335808	00 RAL9016 RAL8014 RAL8017 RAL9006 A00–D6	6.5	2	13	20.0 20.6 20.6 20.6 20.6 20.0	20.4 21.0 21.0 21.0 21.0 20.4
AYPC.W72.0140E	Frame profile 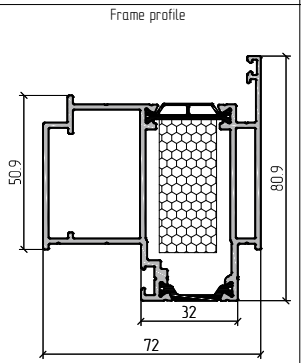	2.00	385.3	790.3	10929321 10929324 10929330 10929331 109293808	RAL9016 RAL8014 RAL8017 RAL9006 A00–D6	6.5	2	13	26.7 26.7 26.7 26.7 25.9	27.2 27.2 27.2 27.2 26.4
AYPC.W72.0140NE	Frame profile 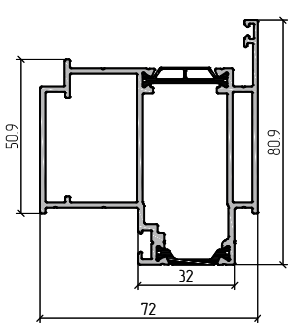	1.97	385.3	790.3	10933600 10933621 10933624 10933630 10933631 109336808	00 RAL9016 RAL8014 RAL8017 RAL9006 A00–D6	6.5	2	13	25.6 26.4 26.4 26.4 26.4 25.6	26.1 26.9 26.9 26.9 26.9 26.1

Article	Name / Image	Weight, kg/m	Exterior perimeter, mm	Cross sectional area, mm^2	Code	Profile colour	Bar length, m	Quantity in pack of		Weight of a pack	
								pcs	m	net, kg	gross, kg
AYPC.W72.0141E	Frame profile 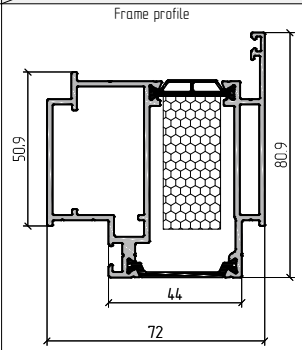	2.05	385.4	830.8	10929421 10929424 10929430 10929431 109294808	RAL9016 RAL8014 RAL8017 RAL9006 A00-D6	6.5	2	13	27.5 27.5 27.5 27.5 26.6	28.0 28.0 28.0 28.0 27.2
AYPC.W72.0141NE	Frame profile 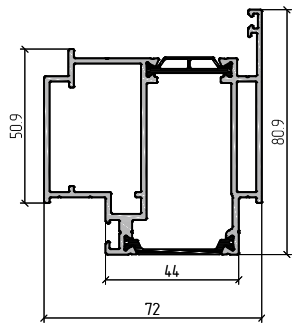	2.03	385.4	830.8	10933700 10933721 10933724 10933730 10933731 109337808	00 RAL9016 RAL8014 RAL8017 RAL9006 A00-D6	6.5	2	13	26.4 27.2 27.2 27.2 27.2 26.4	26.9 27.7 27.7 27.7 27.7 26.9
AYPC.C48.0702	Corner crimping profile 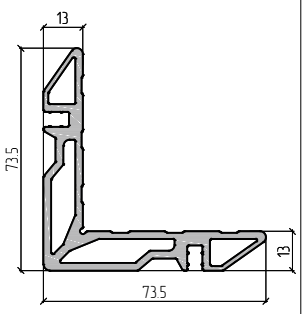	2.10	322.9	776.1	10403600	00	3.25	2	6.5	13.6	13.6

Image	Code	Article	Application
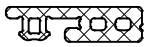	10417700	FRK159	EPDM rubber gasket. Quantity in pack – 200 m Weight – 0.068 kg/m
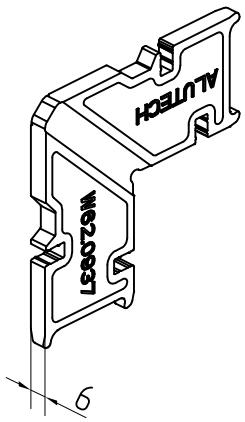	10829900	AYPC.W62.0937	Casted clamping corner. Quantity in pack – 60 pcs 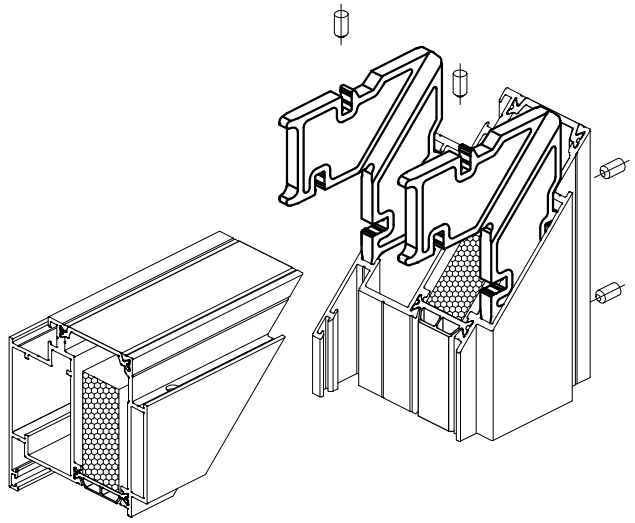 For frame profiles AYPC.W72.0136, AYPC.W72.0137, AYPC.W72.0140, AYPC.W72.141
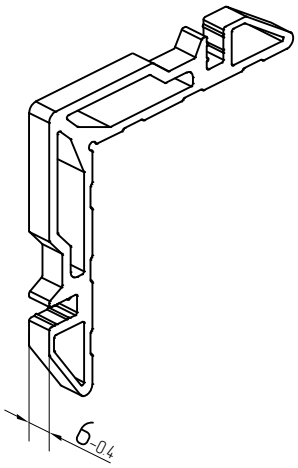	10811900	AYPC.W62.0952	Clamping corner made from AYPC.C48.0702 profile. Quantity in pack – 400 pcs 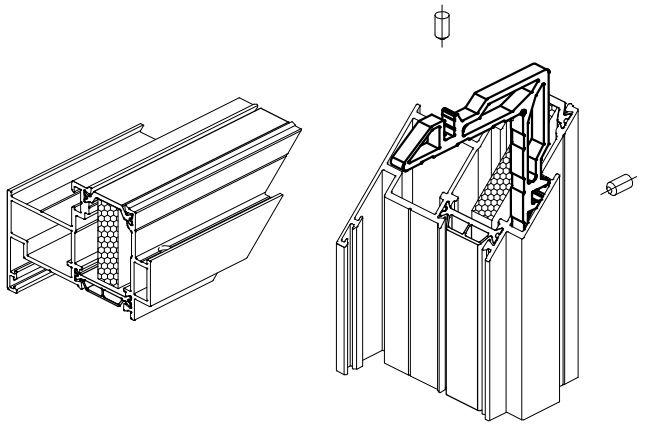 For frame profiles AYPC.W72.0138, AYPC.W72.0139
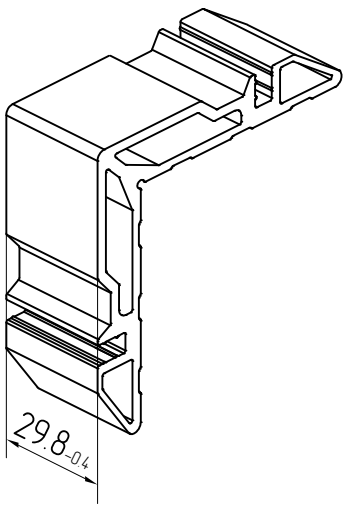	10829800	AYPC.W62.0952-06	Clamping corner made from AYPC.C48.0702 profile. Quantity in pack – 100 pcs 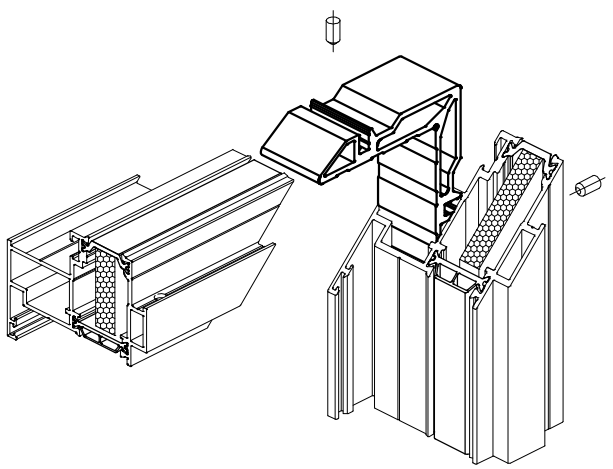 For frame profiles AYPC.W72.0138, AYPC.W72.0139

Installation of ALT W72 series door units into facade using special AYPC.W72.0136, AYPC.W72.0137, AYPC.W72.0138, AYPC.W72.0139, AYPC.W72.0140, AYPC.W72.0141 frames

Mullion

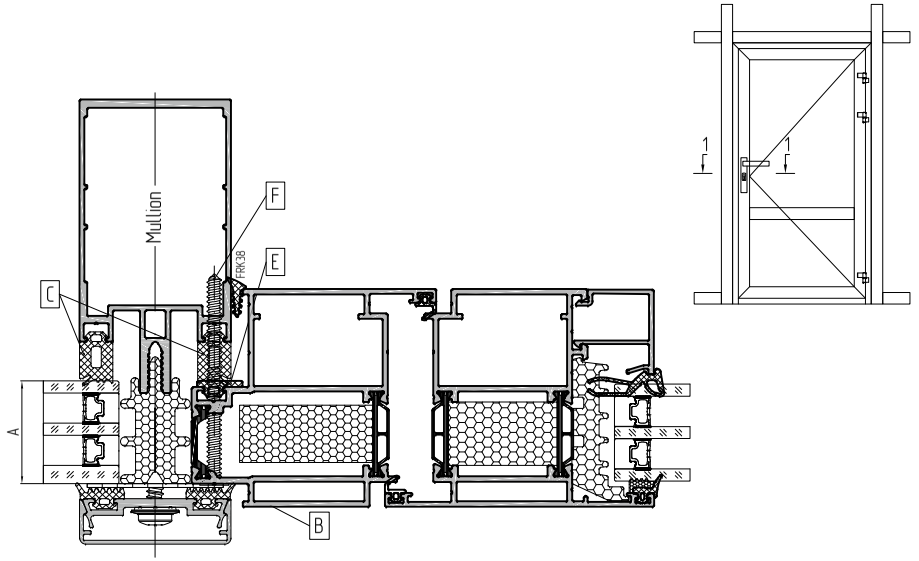

Lap joint of transom

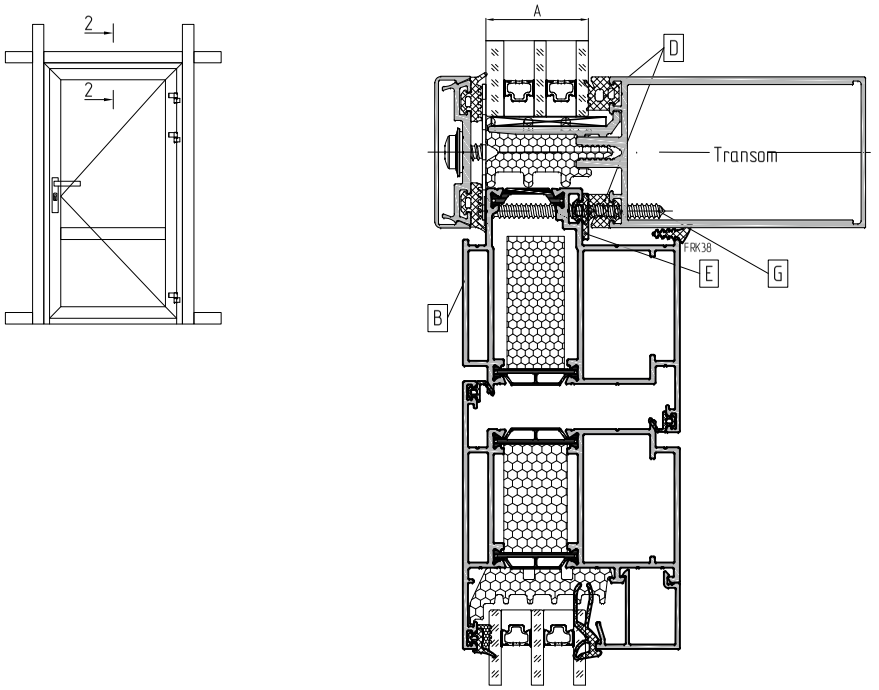

Infill unit thickness	Frame profile	Gasket			Self-tapping screw	
		on mullion	on transom	on frame	on mullion, 300 mm spacing	on transom, 300 mm spacing
A	B	C	D	E	F	G
34 mm	AYPC.W72.0136(N), AYPC.W72.0138(N), AYPC.W72.0140(N)	FRK19	FRK16	FRK127	4.8x70-A2 DIN7982	4.8x60-A2 DIN7982
36 mm		FRK18	FRK15	FRK128		
38 mm		FRK17	FRK14	FRK129		
40 mm		FRK19	FRK16	FRK130		
42 mm		FRK18	FRK15	FRK131		
44 mm		FRK17	FRK14	FRK132		
46 mm	AYPC.W72.0137(N), AYPC.W72.0139(N), AYPC.W72.0141(N)	FRK19	FRK16	FRK127	4.8x80-A2 DIN7982	4.8x70-A2 DIN7982
48 mm		FRK18	FRK15	FRK128		
50 mm		FRK17	FRK14	FRK129		

Data on FRK14–FRK19, FRK127–FRK132 gaskets and AYPC.F50.0941-02, AYPC.F50.0952, AYPC.F50.0952-01 bearing supports is provided in ALT F50 catalogue

Installation of ALT W72 series door units into facade using special AYPC.W72.0136, AYPC.W72.0137, AYPC.W72.0138, AYPC.W72.0139, AYPC.W72.0140, AYPC.W72.0141 frame profiles

Mullion

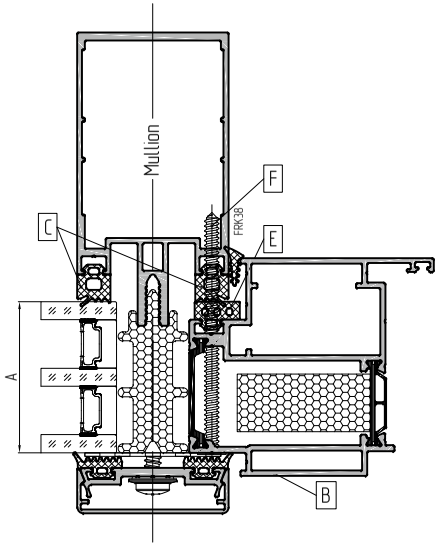

Notch connection of 2 level transom

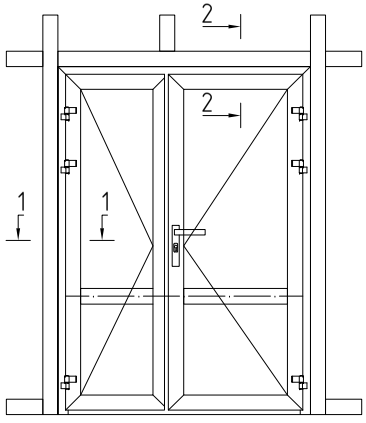

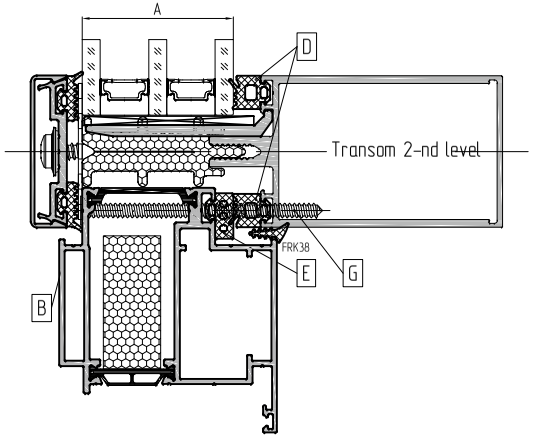

Infill unit thickness	Frame profile	Gasket			Self-tapping screw	
		on mullion	on 2 level transom	on frame	on mullion, 300 mm spacing	on 2 level transom, 300 mm spacing
A	B	C	D	E	F	G
34 mm	AYPC.W72.0136(N), AYPC.W72.0138(N), AYPC.W72.0140(N)	FRK19	FRK19	FRK127	4.8x70-A2 DIN7982	4.8x60-A2 DIN7982
36 mm		FRK18	FRK18	FRK128		
38 mm		FRK17	FRK17	FRK129		
40 mm		FRK19	FRK19	FRK130		
42 mm		FRK18	FRK18	FRK131		
44 mm		FRK17	FRK17	FRK132		
46 mm	AYPC.W72.0137(N), AYPC.W72.0139(N), AYPC.W72.0141(N)	FRK19	FRK19	FRK127	4.8x80-A2 DIN7982	4.8x80-A2 DIN7982
48 mm		FRK18	FRK18	FRK128		
50 mm		FRK17	FRK17	FRK129		

Data on FRK14-FRK19, FRK127-FRK132 gaskets and AYPC.F50.0952, AYPC.F50.0952-01, AYPC.F50.0952-02 bearing supports is provided in ALT F50 catalogue

Installation of ALT W72 series door units into facade using special AYPC.W72.0136, AYPC.W72.0137, AYPC.W72.0138, AYPC.W72.0139, AYPC.W72.0140, AYPC.W72.0141 frame profiles

Transom as a mullion

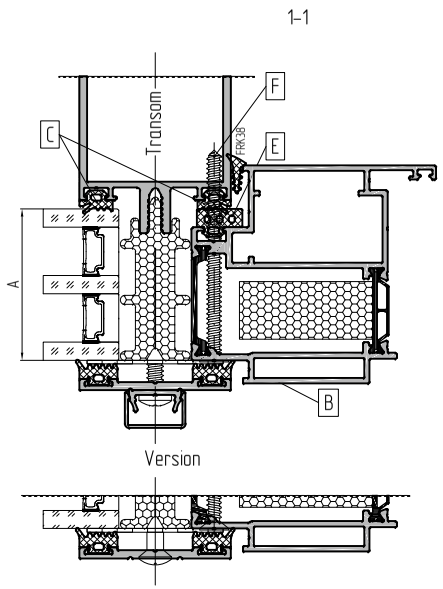

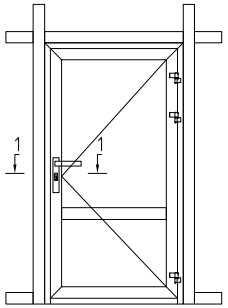

Butt joint of transom

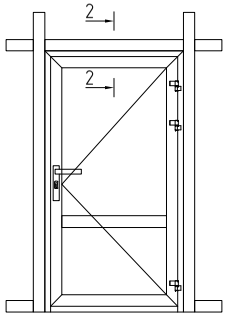

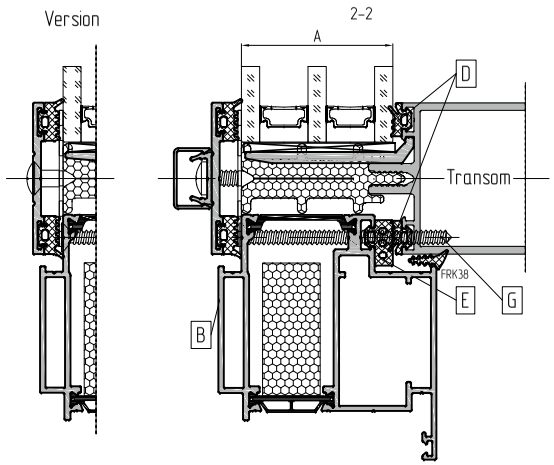

Infill unit thickness	Frame profile	Gasket			Self-tapping screw	
		on transom	on transom notch commection	on frame	on transom, 300 mm spacing	on transom butt joint, 300 mm spacing
A	B	C	D	E	F	G
34 mm	AYPC.W72.0136(N), AYPC.W72.0138(N), AYPC.W72.0140(N)	FRK16	FRK16	FRK127	4.8x60-A2 DIN7982	4.8x60-A2 DIN7982
36 mm		FRK15	FRK15	FRK128		
38 mm		FRK14	FRK14	FRK129		
40 mm		FRK16	FRK16	FRK130		
42 mm		FRK15	FRK15	FRK131		
44 mm		FRK14	FRK14	FRK132		
46 mm*	AYPC.W72.0137(N), AYPC.W72.0139(N), AYPC.W72.0141(N)	FRK16	FRK16	FRK127	4.8x70-A2 DIN7982	4.8x70-A2 DIN7982
48 mm*		FRK15	FRK15	FRK128		
50 mm*		FRK14	FRK14	FRK129		

Data on FRK14-FRK16, FRK127-FRK132 gaskets and AYPC.F50.0941-02, AYPC.F50.0952, AYPC.F50.0952-01 bearing supports is provided in ALT F50 catalogue.
* The option without cover cap for given glazing thicknesses is not possible

Installation of ALT W72 series door units into facade using special AYPC.W72.0136, AYPC.W72.0137, AYPC.W72.0138, AYPC.W72.0139, AYPC.W72.0140, AYPC.W72.0141 frames

Transom as a mullion

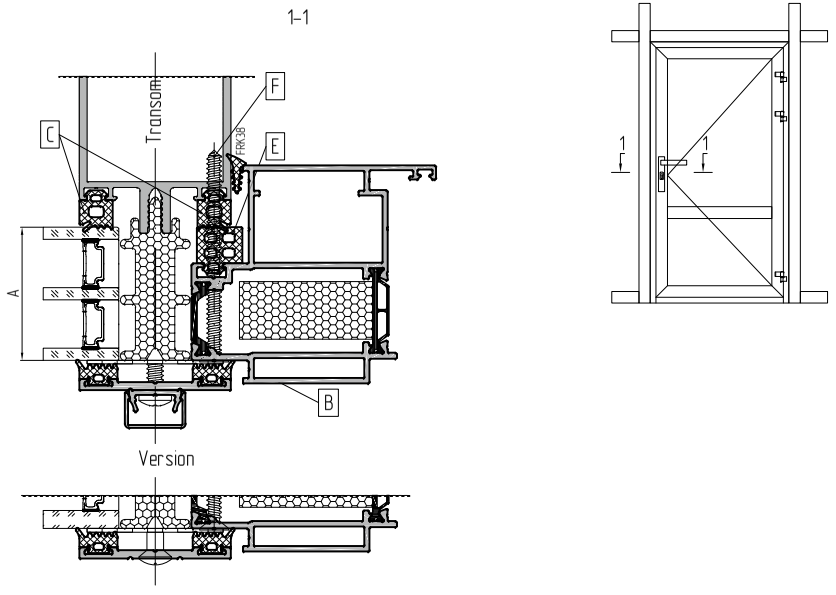

Butt joint of transom and connecting element

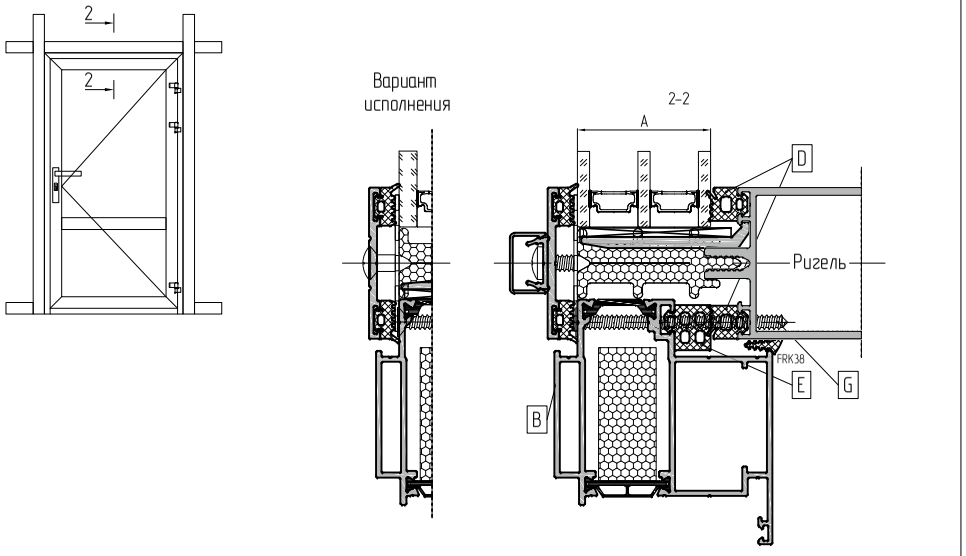

Infill unit thickness	Frame profile	Gasket			Self-tapping screw	
		on transom	on transom notch commection	on frame	on transom, 300 mm spacing	on transom butt joint, 300 mm spacing
A	B	C	D	E	F	G
34 mm	AYPC.W72.0136(N), AYPC.W72.0138(N), AYPC.W72.0140(N)	FRK19	FRK19	FRK127	4.8x60-A2 DIN7982	4.8x60-A2 DIN7982
36 mm		FRK18	FRK18	FRK128		
38 mm		FRK17	FRK17	FRK129		
40 mm*		FRK19	FRK19	FRK130	4.8x70-A2 DIN7982	4.8x70-A2 DIN7982
42 mm*		FRK18	FRK18	FRK131		
44 mm*		FRK17	FRK17	FRK132		
46 mm*	AYPC.W72.0137(N), AYPC.W72.0139(N), AYPC.W72.0141(N)	FRK19	FRK19	FRK127	4.8x80-A2 DIN7982	4.8x80-A2 DIN7982
48 mm*		FRK18	FRK18	FRK128		
50 mm*		FRK17	FRK17	FRK129		

Data on FRK17-FRK19, FRK127-FRK132 gaskets and AYPC.F50.0952, AYPC.F50.0952-01, AYPC.F50.0952-02 bearing supports is provided in ALT F50 catalogue.

* The option without cover cap for given glazing thicknesses is not possible

Installation of ALT W72 series door units into facade using special AYPC.W72.0136, AYPC.W72.0137, AYPC.W72.0138, AYPC.W72.0139, AYPC.W72.0140, AYPC.W72.0141 frame profiles

2 level transom as a mullion

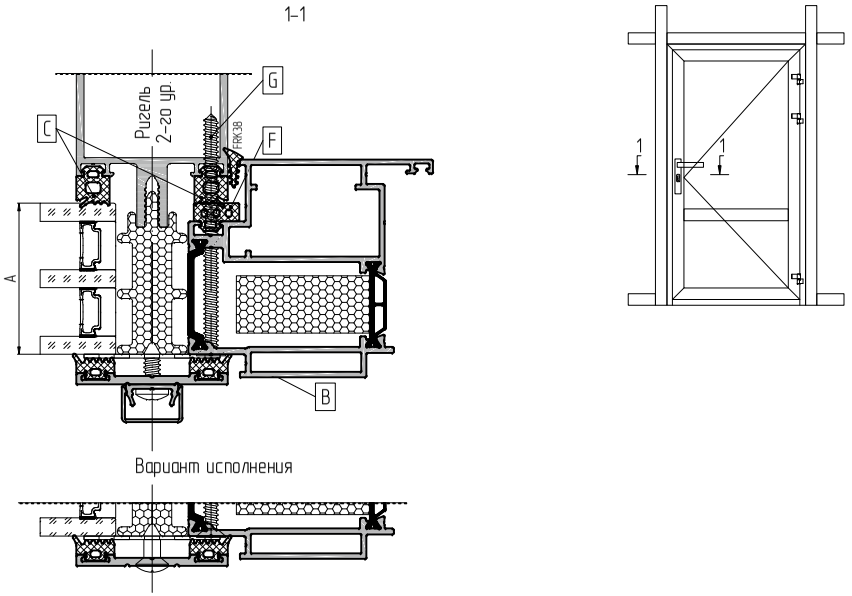

Lap joint of transom

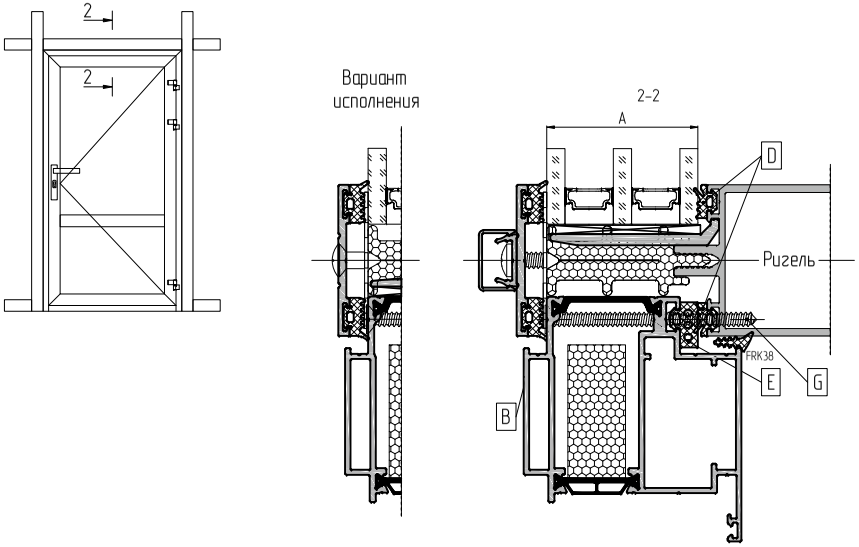

Infill unit thickness	Frame profile	Gasket			Self-tapping screw	
		on 2 level transom	on transom lap joint	on frame	on 2 level transom, 300 mm spacing	on transom lap joint, 300 mm spacing
A	B	C	D	E	F	G
34 mm	AYPC.W72.0136(N), AYPC.W72.0138(N), AYPC.W72.0140(N)	FRK19	FRK16	FRK127	4.8x60-A2 DIN7982	4.8x60-A2 DIN7982
36 mm		FRK18	FRK15	FRK128		
38 mm		FRK17	FRK14	FRK129		
40 mm		FRK19	FRK16	FRK130	4.8x70-A2 DIN7982	
42 mm		FRK18	FRK15	FRK131		
44 mm		FRK17	FRK14	FRK132		
46 mm*	AYPC.W72.0137(N). AYPC.W72.0139(N), AYPC.W72.0141(N)	FRK19	FRK16	FRK127	4.8x80-A2 DIN7982	4.8x70-A2 DIN7982
48 mm*		FRK18	FRK15	FRK128		
50 mm*		FRK17	FRK14	FRK129		

Data on FRK14-FRK19, FRK127-FRK132 gaskets and AYPC.F50.0941-02, AYPC.F50.0952, AYPC.F50.0952-01 bearing supports is provided in ALT F50 catalogue.
* The option without cover cap for given glazing thicknesses is not possible

Installation of ALT W72 series door units into facade using AYPC.W72.0204, AYPC.W72.0205 leaf profiles as a frame

Mullion

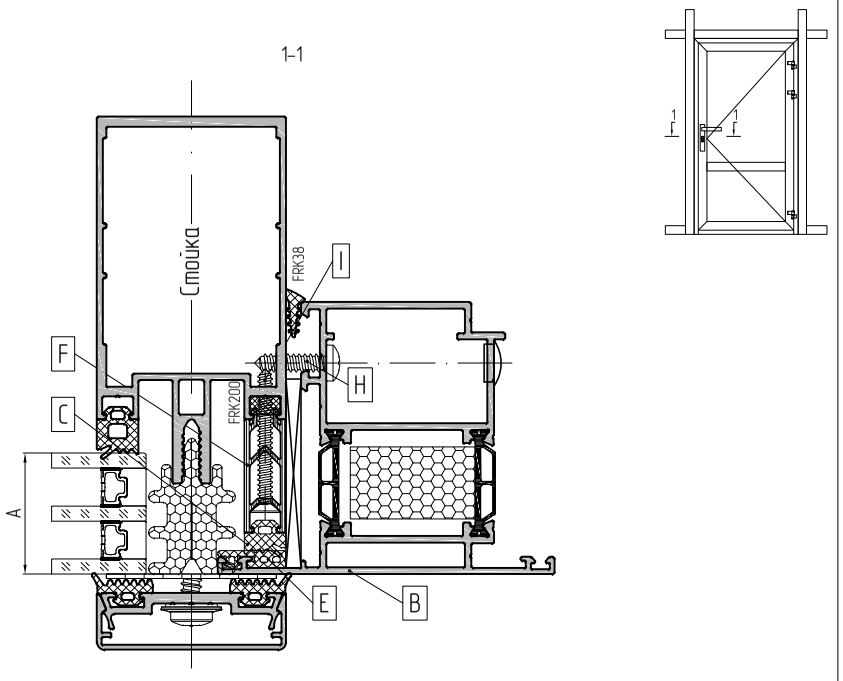

Lap joint of transom

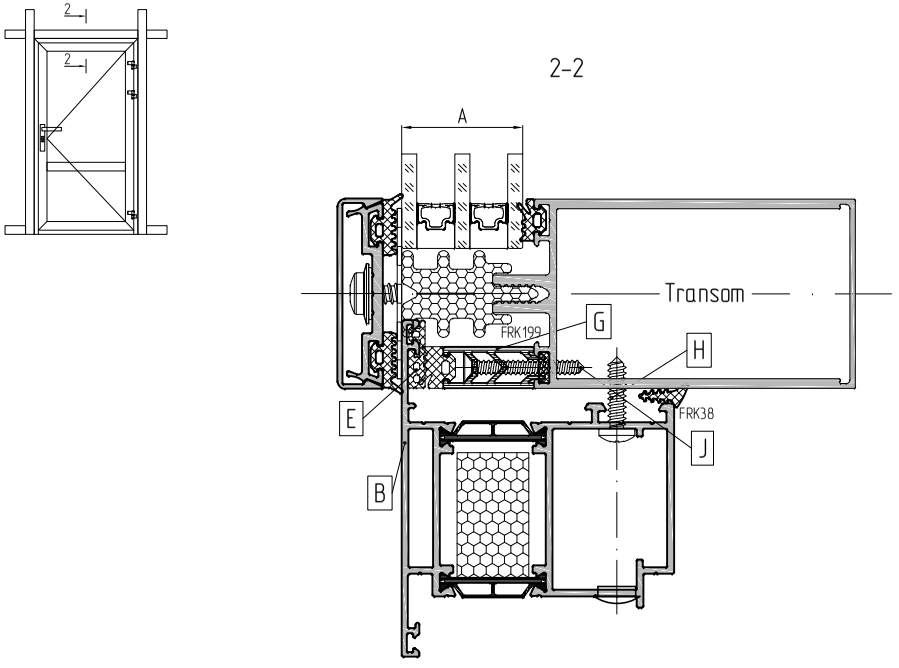

Infill unit thickness	Frame profile	Gasket			Distance profile / gasket		Self-tapping screw		
		on mullion	on transom	on frame	on mullion	on transom	on mullion/transom, 300 mm spacing	on mullion distance profile, 300 mm spacing	on transom distance profile, 300 mm spacing
A	B	C	D	E	F	G	H	I	J
22 mm	AYPC.W72.0204(N) /AYPC.W72.0205(N)	FRK15	FRK15	FRK159	AYPC.F50.0902-01 / FRK200	AYPC.F50.0901-01 / FRK199	4.8x19-A2 DIN7981	3.9x32-A2 DIN7982	3.9x25-A2 DIN7982
24 mm									
26 mm									
28 mm		FRK15	FRK15	FRK159	AYPC.F50.0903-01 / FRK200	AYPC.F50.0902-01 / FRK199	4.8x19-A2 DIN7981	3.9x38-A2 DIN7982	3.9x32-A2 DIN7982
30 mm									
32 mm									

Data on FRK15 gasket and AYPC.F50.0952, AYPC.F50.0952-01, AYPC.F50.0952-02 remote insert is provided in ALT F50 catalogue

Installation of ALT W72 series door units into facade using AYPC.W72.0204. AYPC.W72.0205 leaf profiles as a frame

Mullion

1-1

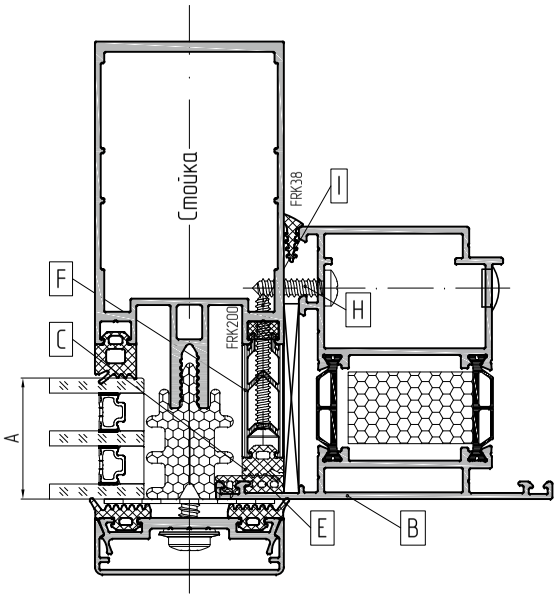

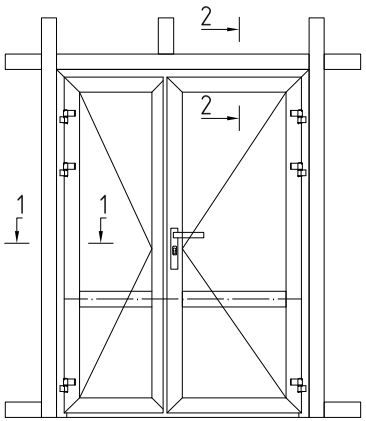

Notch connection of 2 level transom

2-2

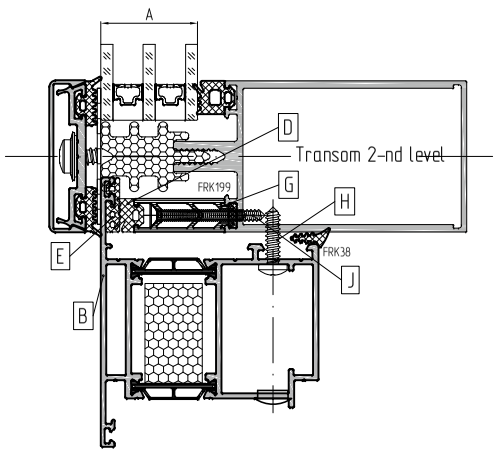

Infill unit thickness	Frame profile	Gasket			Distance profile / gasket		Self-tapping screw		
		on mullion	on transom	on frame	on mullion	on transom	on mullion/transom, 300 mm spacing	on mullion distance profile, 300 mm spacing	on transom distance profile, 300 mm spacing
A	B	C	D	E	F	G	H	I	J
22 mm	AYPC.W72.0204(N) /AYPC.W72.0205(N)	FRK15	FRK15	FRK159	AYPC.F50.0902-01 / FRK200	AYPC.F50.0901-01 / FRK199	4.8x19-A2 DIN7981	3.9x32-A2 DIN7982	3.9x25-A2 DIN7982
24 mm									
26 mm									
28 mm		FRK15	FRK15	FRK159	AYPC.F50.0903-01 / FRK200	AYPC.F50.0902-01 / FRK199	4.8x19-A2 DIN7981	3.9x38-A2 DIN7982	3.9x32-A2 DIN7982
30 mm									
32 mm									

Data on FRK15 gasket and AYPC.F50.0952, AYPC.F50.0952-01, AYPC.F50.0952-02 remote insert is provided in ALT F50 catalogue

Installation of ALT W72 series door units into facade using AYPC.W72.0204, AYPC.W72.0205 leaf profiles as a frame

Transom as a mullion

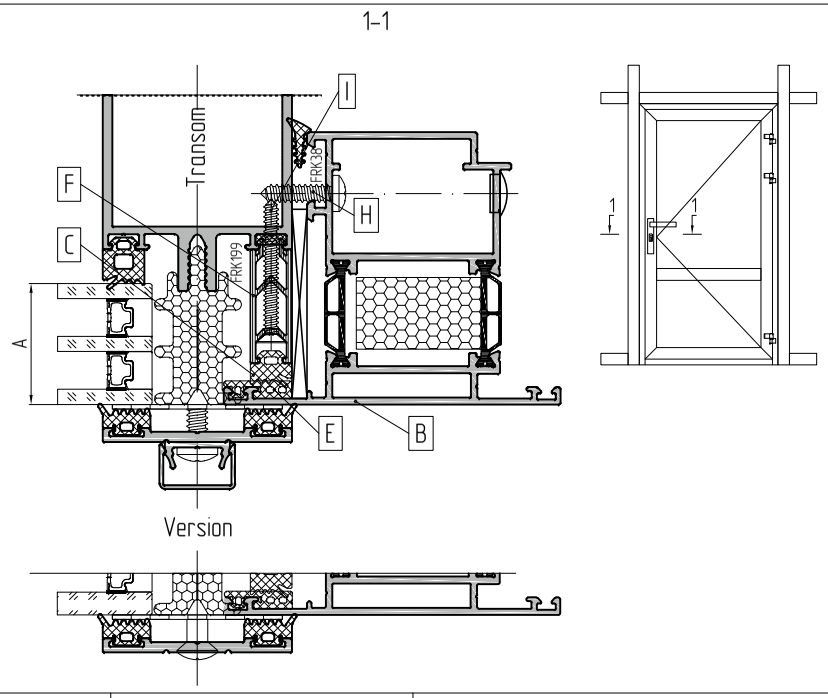

Butt joint of transom

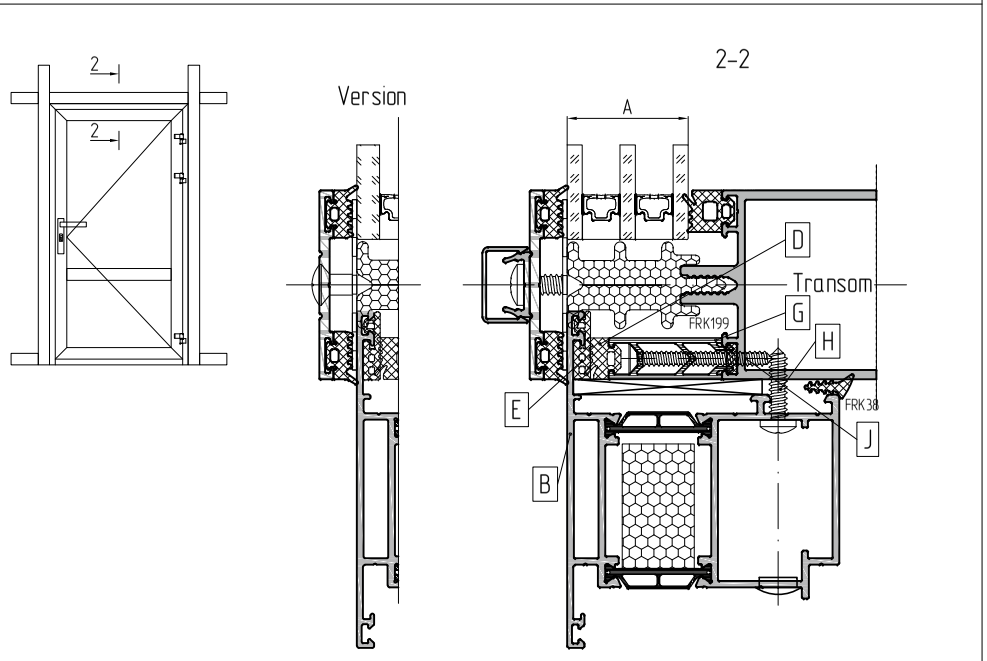

Infill unit thickness	Frame profile	Gasket			Distance profile / gasket		Self-tapping screw		
		on transom as a mullion	on transom	on frame	on mullion	on transom	on mullion/transom, 300 mm spacing	on mullion distance profile, 300 mm spacing	on transom distance profile, 300 mm spacing
A	B	C	D	E	F	G	H	I	J
22 mm	AYPC.W72.0204(N) /AYPC.W72.0205(N)	FRK15	FRK15	FRK159	AYPC.F50.0902-01 / FRK199	AYPC.F50.0902-01 / FRK199	4.8x19-A2 DIN7981	3.9x32-A2 DIN7982	3.9x32-A2 DIN7982
24 mm									
26 mm									
28 mm		FRK15	FRK15	FRK159	AYPC.F50.0903-01 / FRK199	AYPC.F50.0903-01 / FRK199	4.8x19-A2 DIN7981	3.9x38-A2 DIN7982	3.9x38-A2 DIN7982
30 mm									
32 mm									

Data on FRK15 gasket and AYPC.F50.0952, AYPC.F50.0952-01, AYPC.F50.0952-02 remote insert is provided in ALT F50 catalogue

Installation of ALT W72 series door units into facade using AYPC.W72.0204, AYPC.W72.0205 leaf profiles as a frame

Transom as a mullion

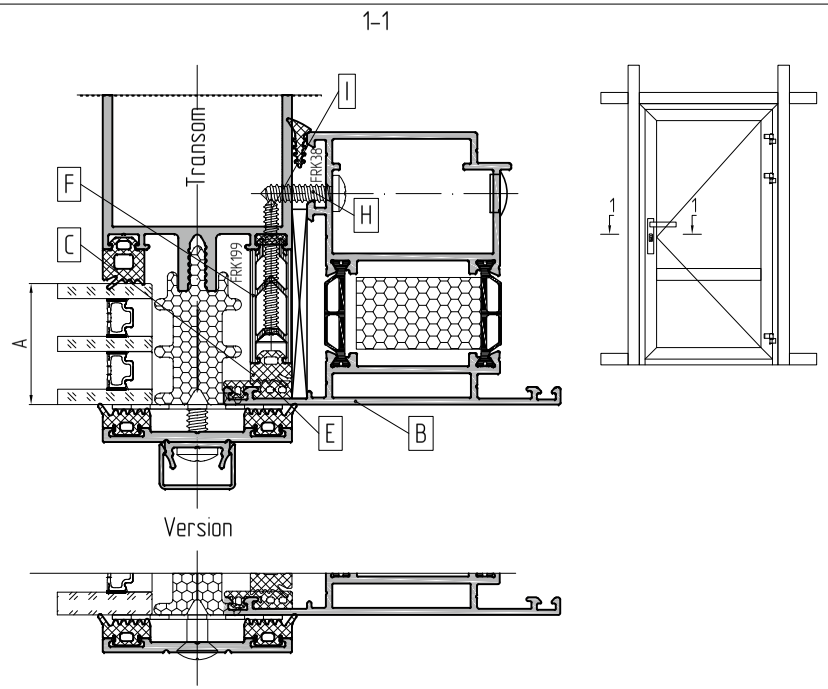

Butt joint of transom and connecting element

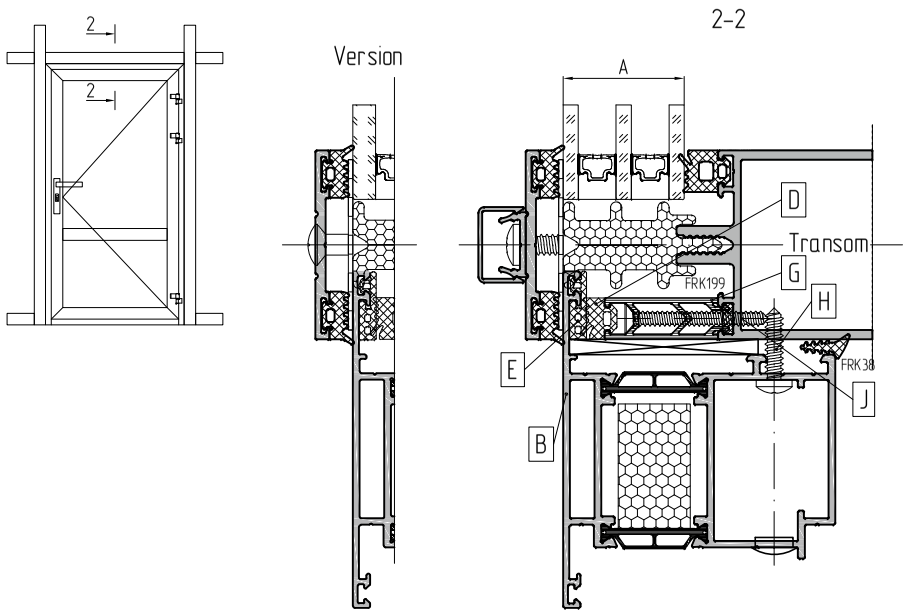

Infill unit thickness	Frame profile	Gasket			Distance profile / gasket		Self-tapping screw		
		on transom as a mullion	on transom	on frame	on mullion	on transom	on mullion/transom, 300 mm spacing	on mullion distance profile, 300 mm spacing	on transom distance profile, 300 mm spacing
A	B	C	D	E	F	G	H	I	J
22 mm	AYPC.W72.0204(N) /AYPC.W72.0205(N)	FRK15	FRK15	FRK159	AYPC.F50.0902-01 / FRK199	AYPC.F50.0902-01 / FRK199	4.8x19-A2 DIN7981	3.9x32-A2 DIN7982	3.9x32-A2 DIN7982
24 mm									
26 mm									
28 mm		FRK15	FRK15	FRK159	AYPC.F50.0903-01 / FRK199	AYPC.F50.0903-01 / FRK199	4.8x19-A2 DIN7981	3.9x38-A2 DIN7982	3.9x38-A2 DIN7982
30 mm									
32 mm									

Data on FRK15 gasket and AYPC.F50.0952, AYPC.F50.0952-01, AYPC.F50.0952-02 remote insert is provided in ALT F50 catalogue

Installation of ALT W72 series door units into facade using AYPC.W72.0204, AYPC.W72.0205 leaf profiles as a frame

2 level transom as a mullion

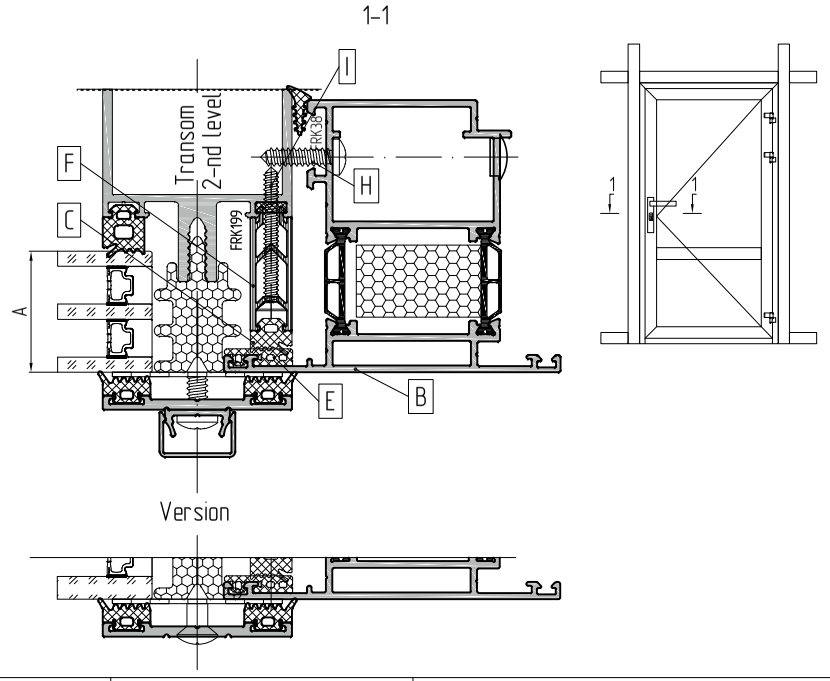

Lap joint of transom

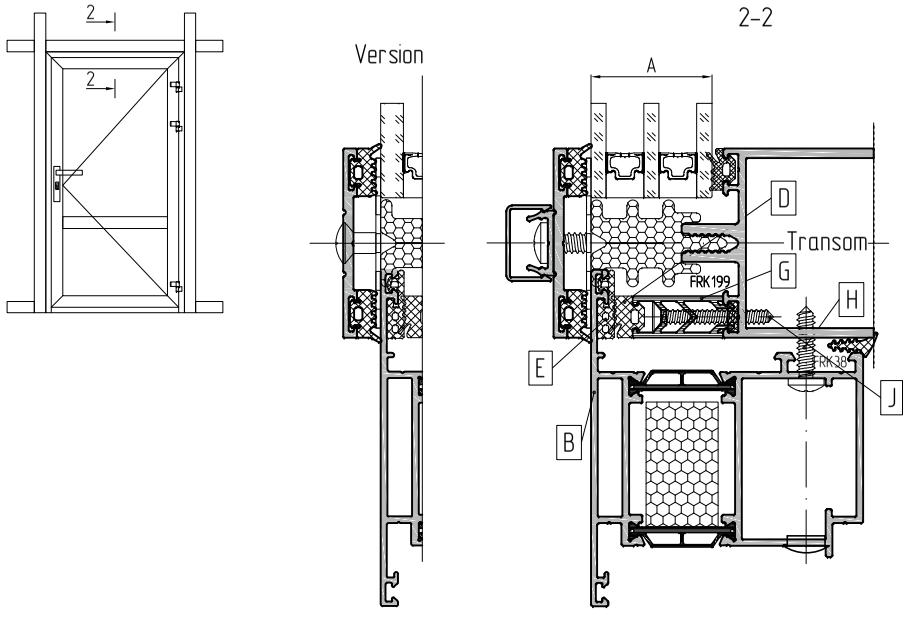

Infill unit thickness	Frame profile	Gasket			Distance profile / gasket		Self-tapping screw		
		on mullion	on transom	on frame	on mullion	on transom	on mullion/transom, 300 mm spacing	on mullion distance profile, 300 mm spacing	on transom distance profile, 300 mm spacing
A	B	C	D	E	F	G	H	I	J
22 mm	AYPC.W72.0204(N) /AYPC.W72.0205(N)	FRK15	FRK15	FRK159	AYPC.F50.0901-01 / FRK199	AYPC.F50.0901-01 / FRK199	4.8x19-A2 DIN7981	3.9x25-A2 DIN7982	3.9x25-A2 DIN7982
24 mm									
26 mm									
28 mm		FRK15	FRK15	FRK159	AYPC.F50.0902-01 / FRK199	AYPC.F50.0902-01 / FRK199	4.8x19-A2 DIN7981	3.9x32-A2 DIN7982	3.9x32-A2 DIN7982
30 mm									
32 mm									

Data on FRK15 gasket and AYPC.F50.0952, AYPC.F50.0952-01, AYPC.F50.0952-02 remote insert is provided in ALT F50 catalogue

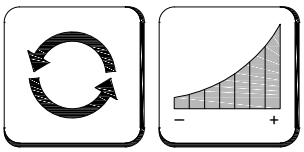

Option 1

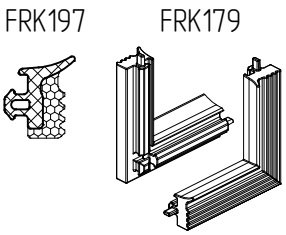

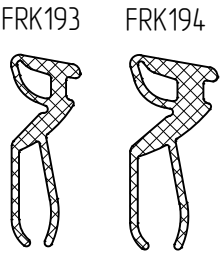

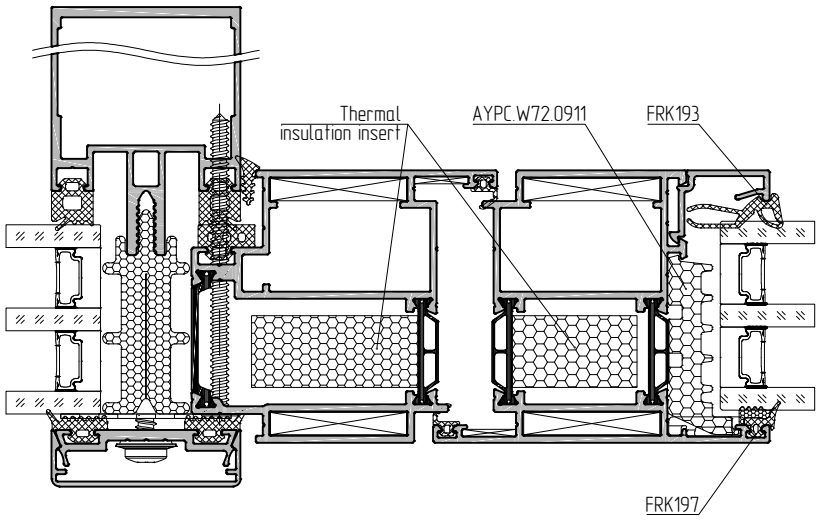

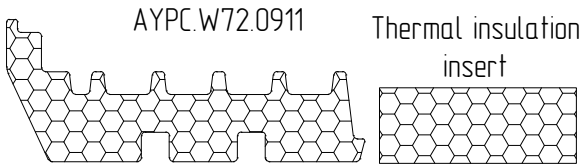

Option 2

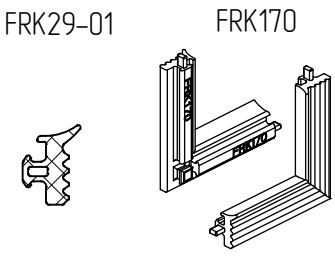

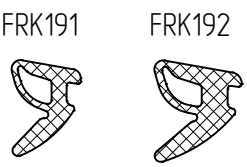

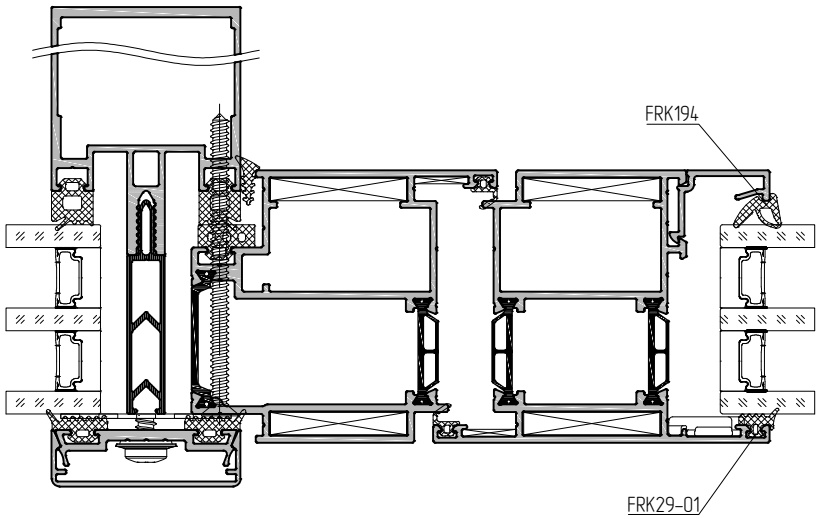

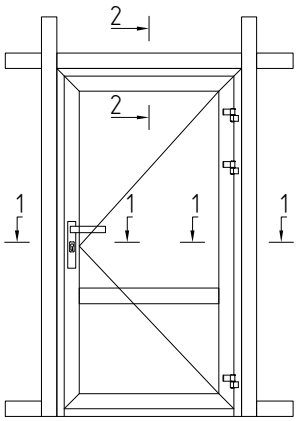

Scale 1:2

1–1

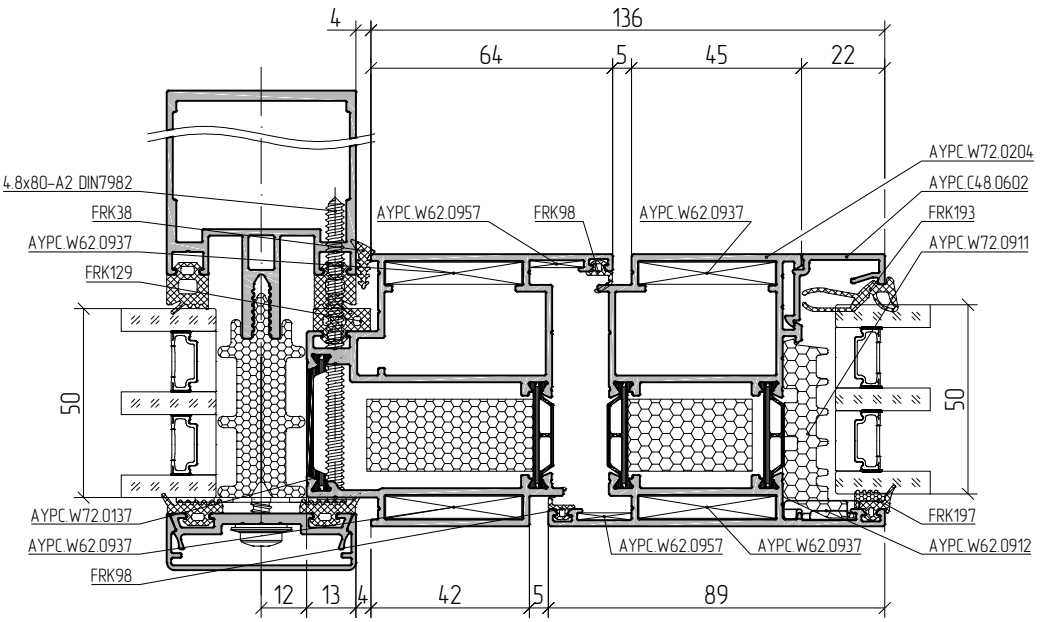

2–2

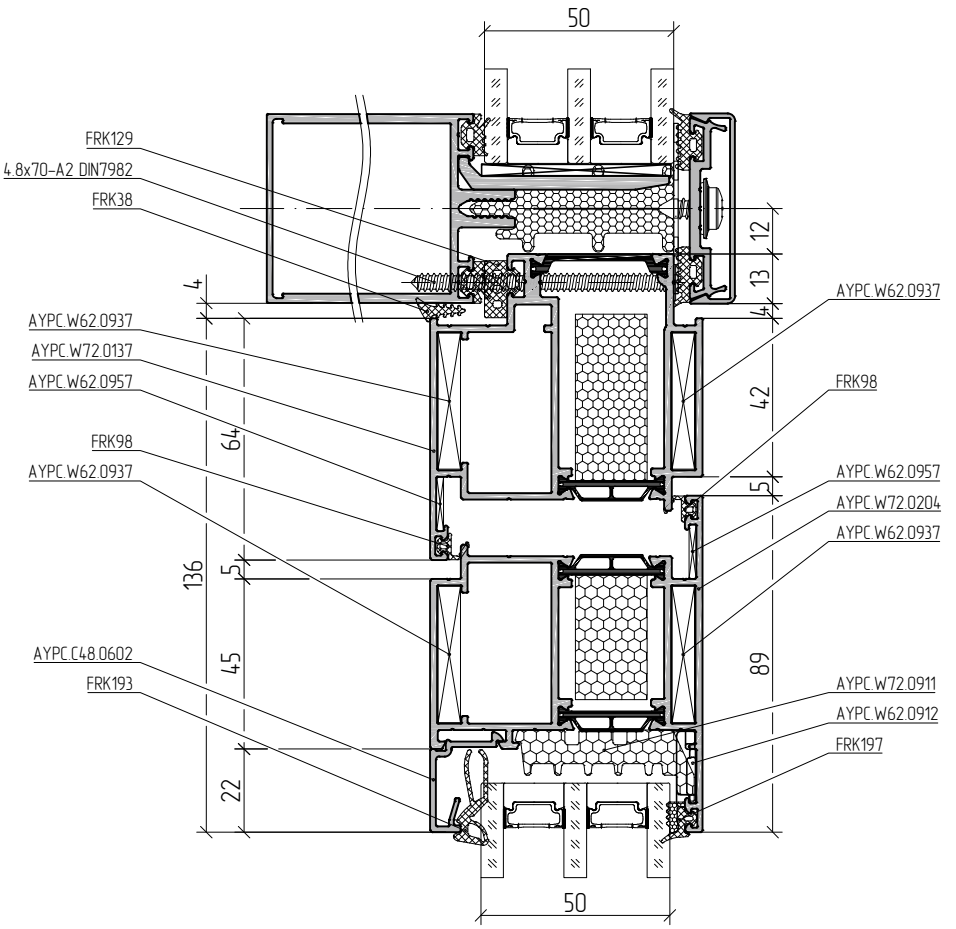

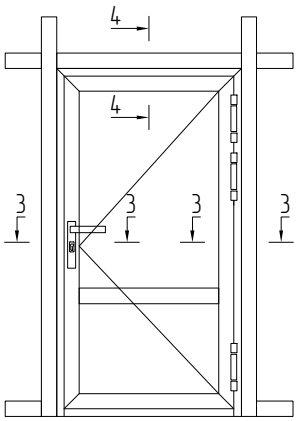

Scale 1:2

3–3

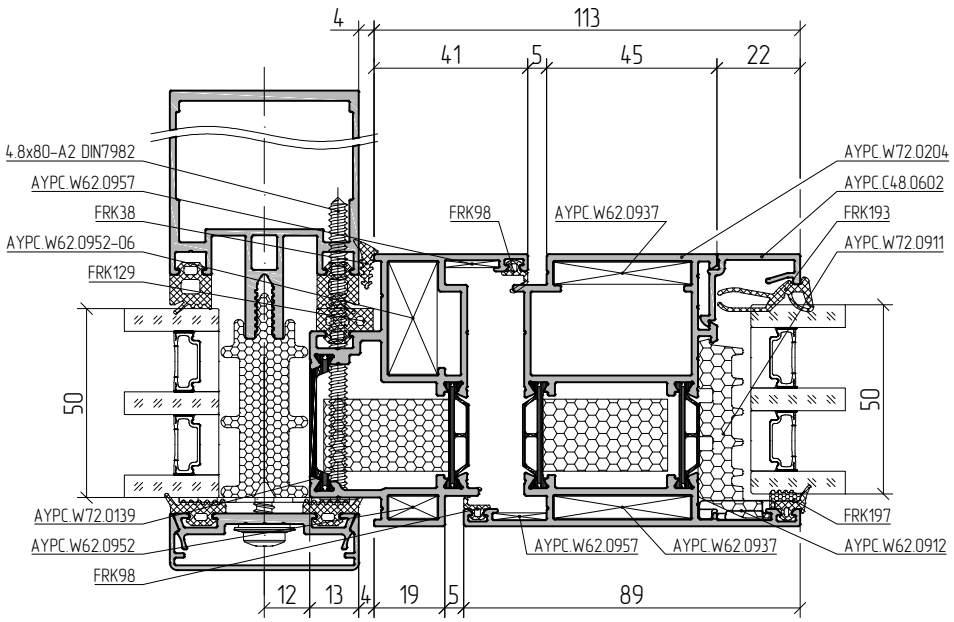

Joint solution can be realized only by using barrel hinges

4–4

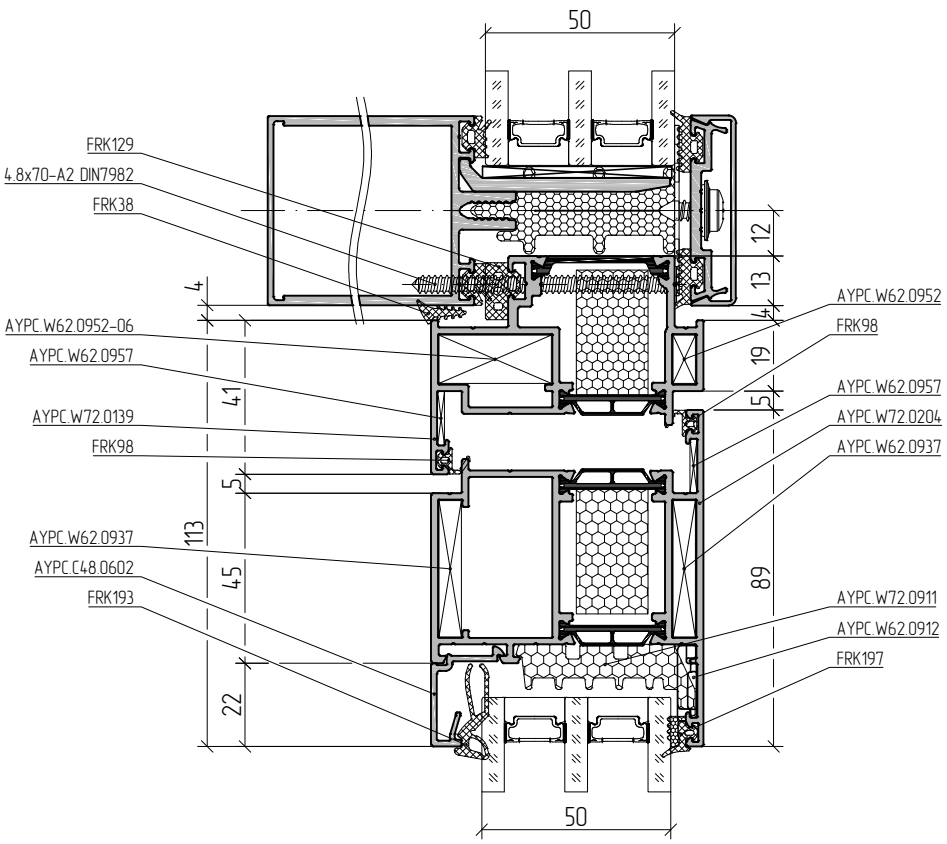

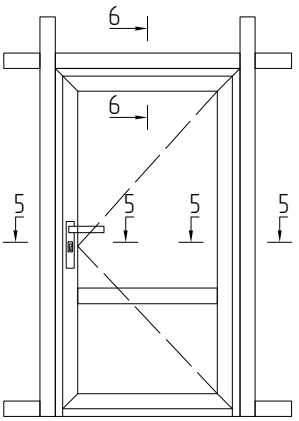

Scale 1:2

5–5

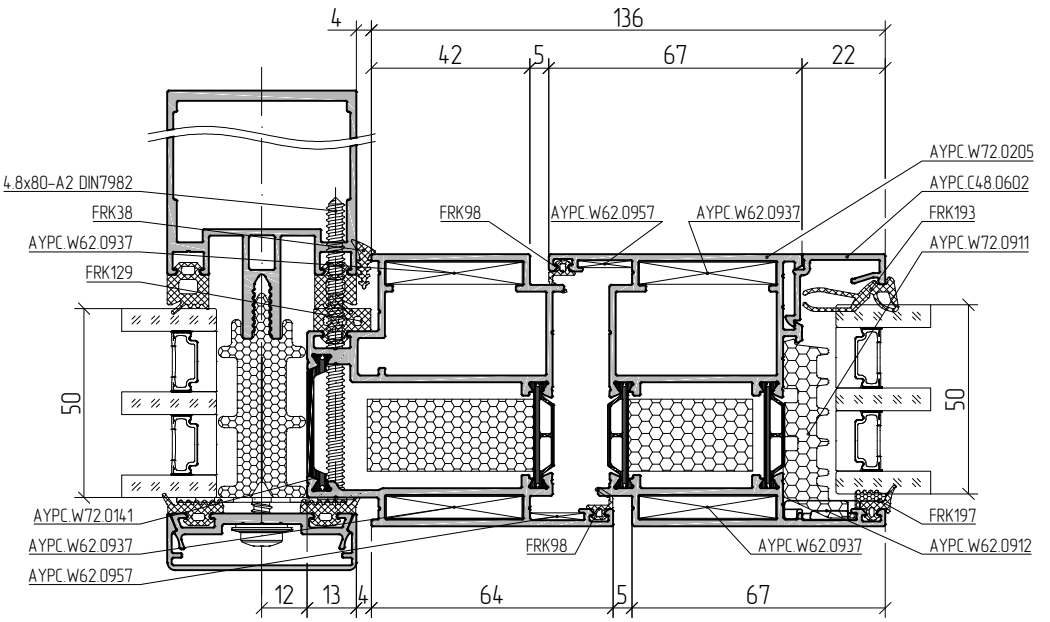

6–6

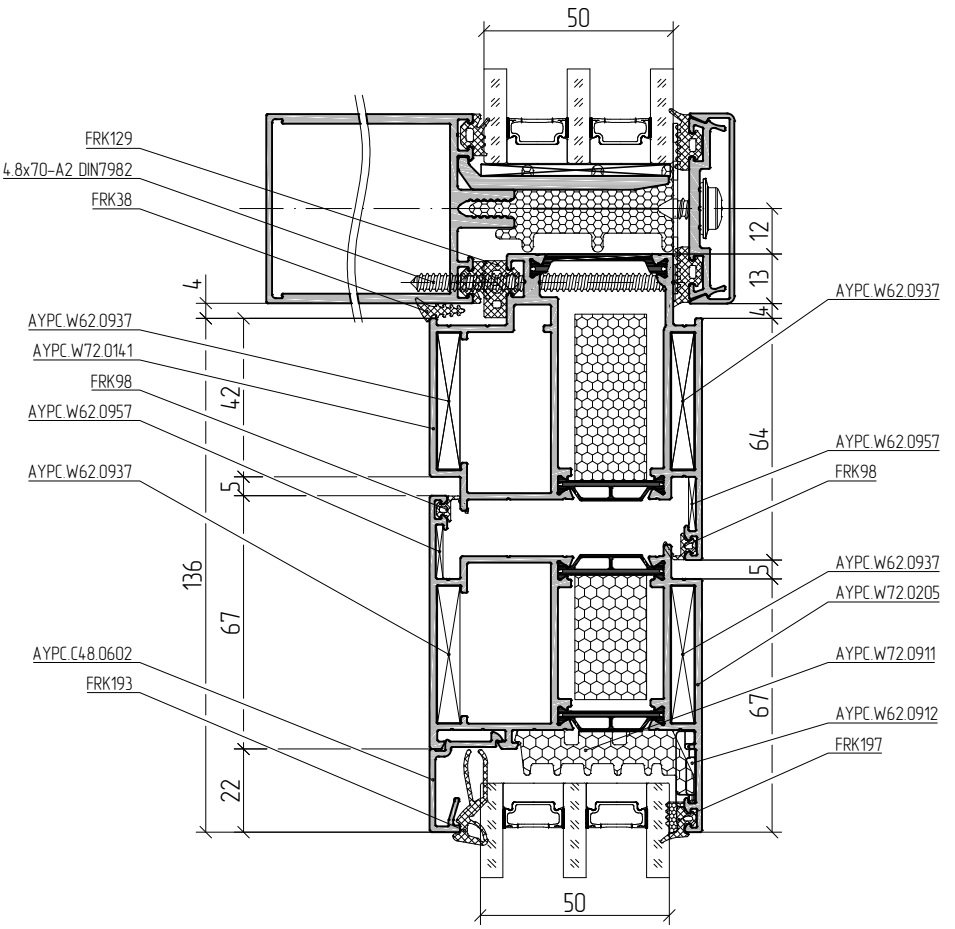

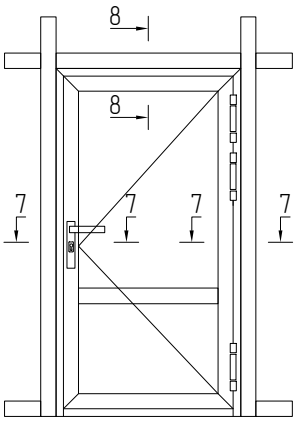

Scale 1:2

7–7

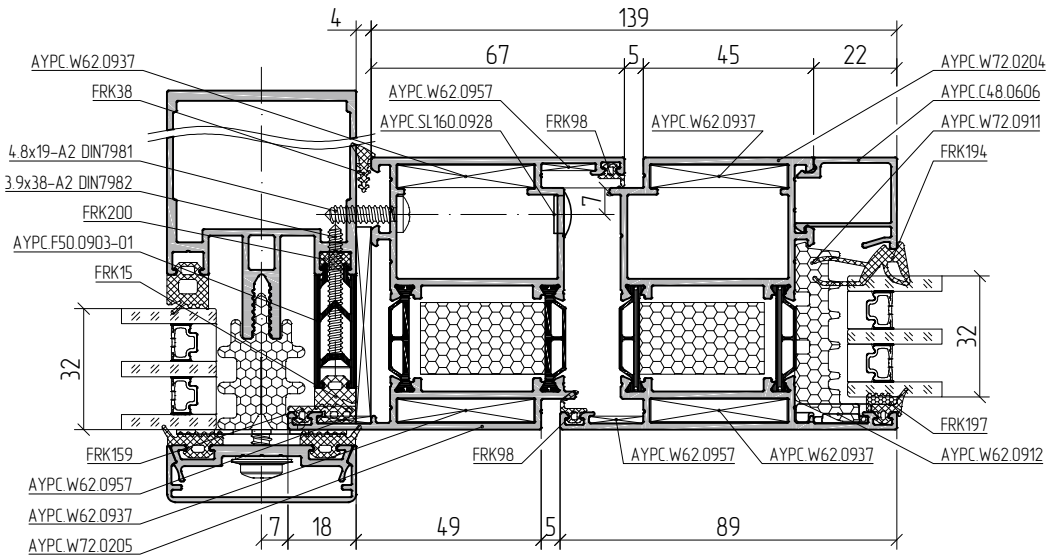

8–8

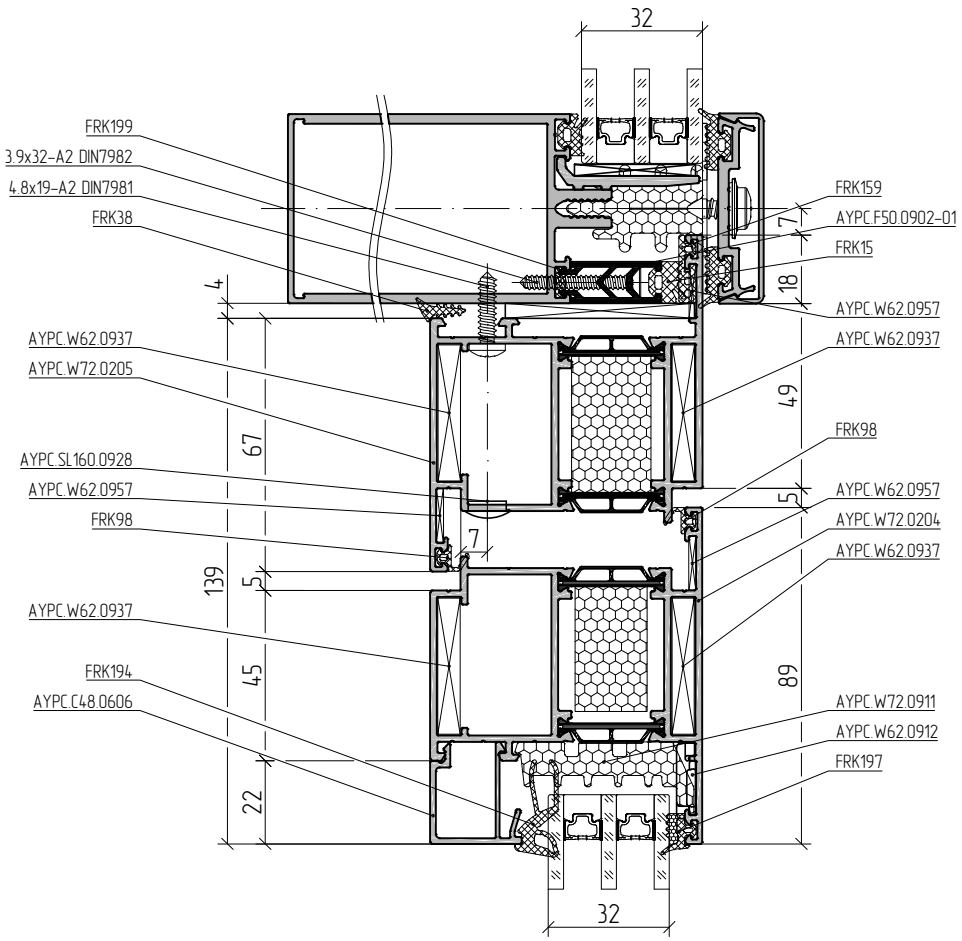

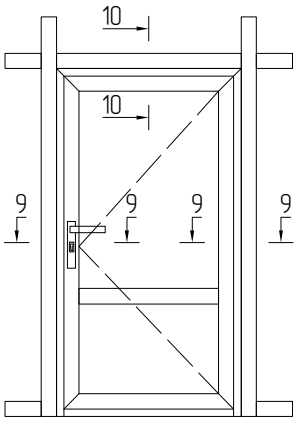

Scale 1:2

9–9

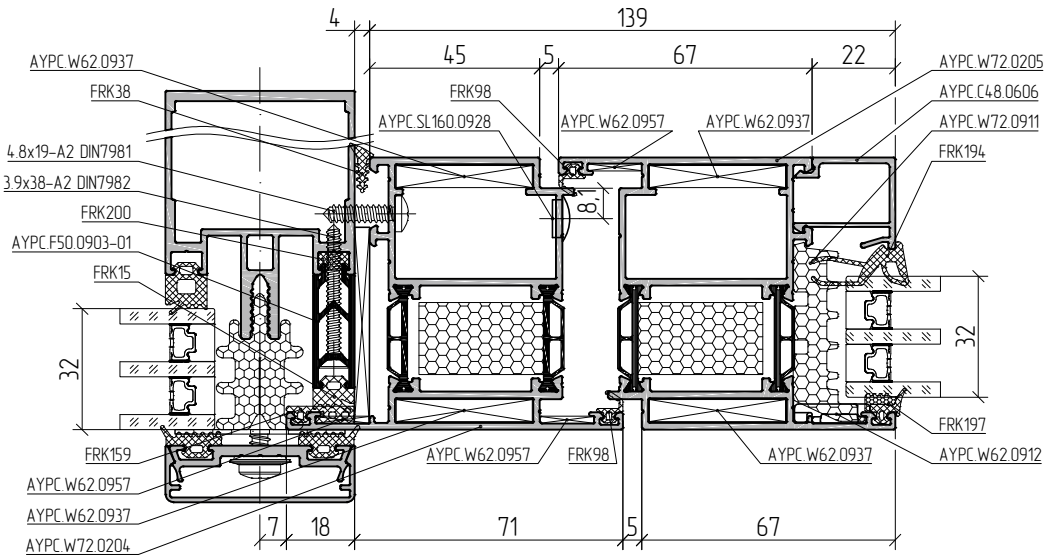

10–10

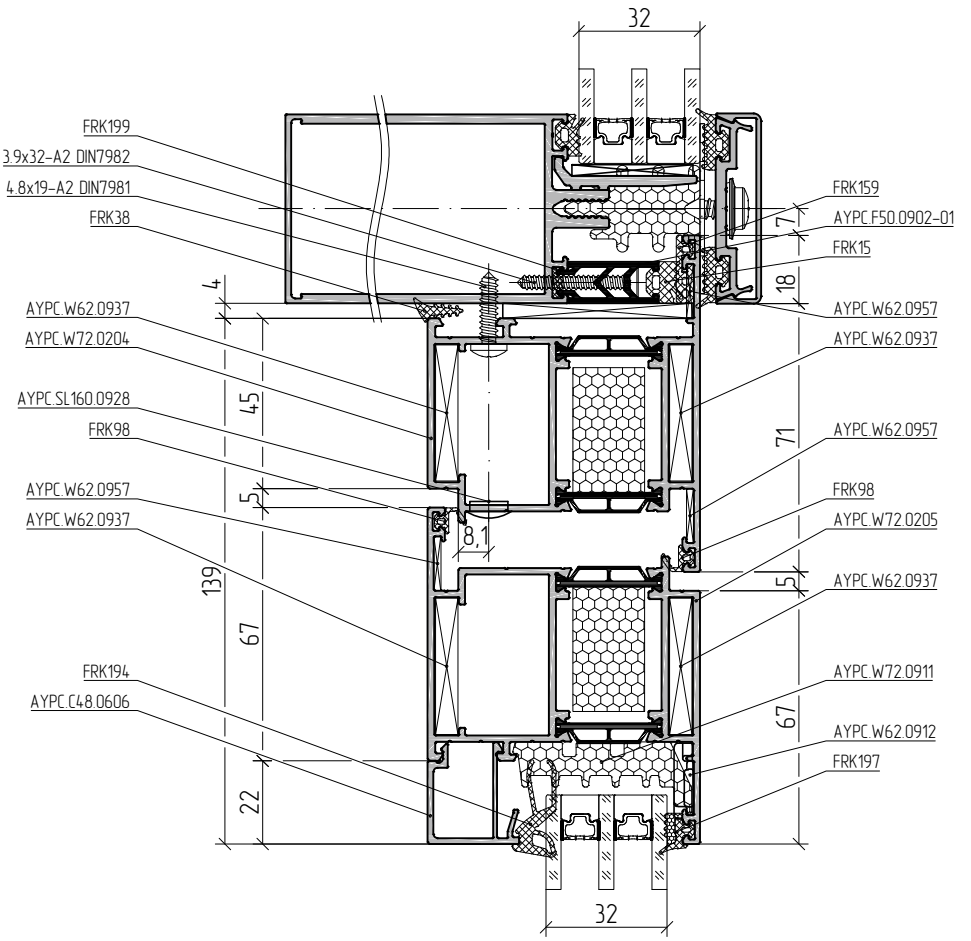

Calculation of outward opening single leaf door

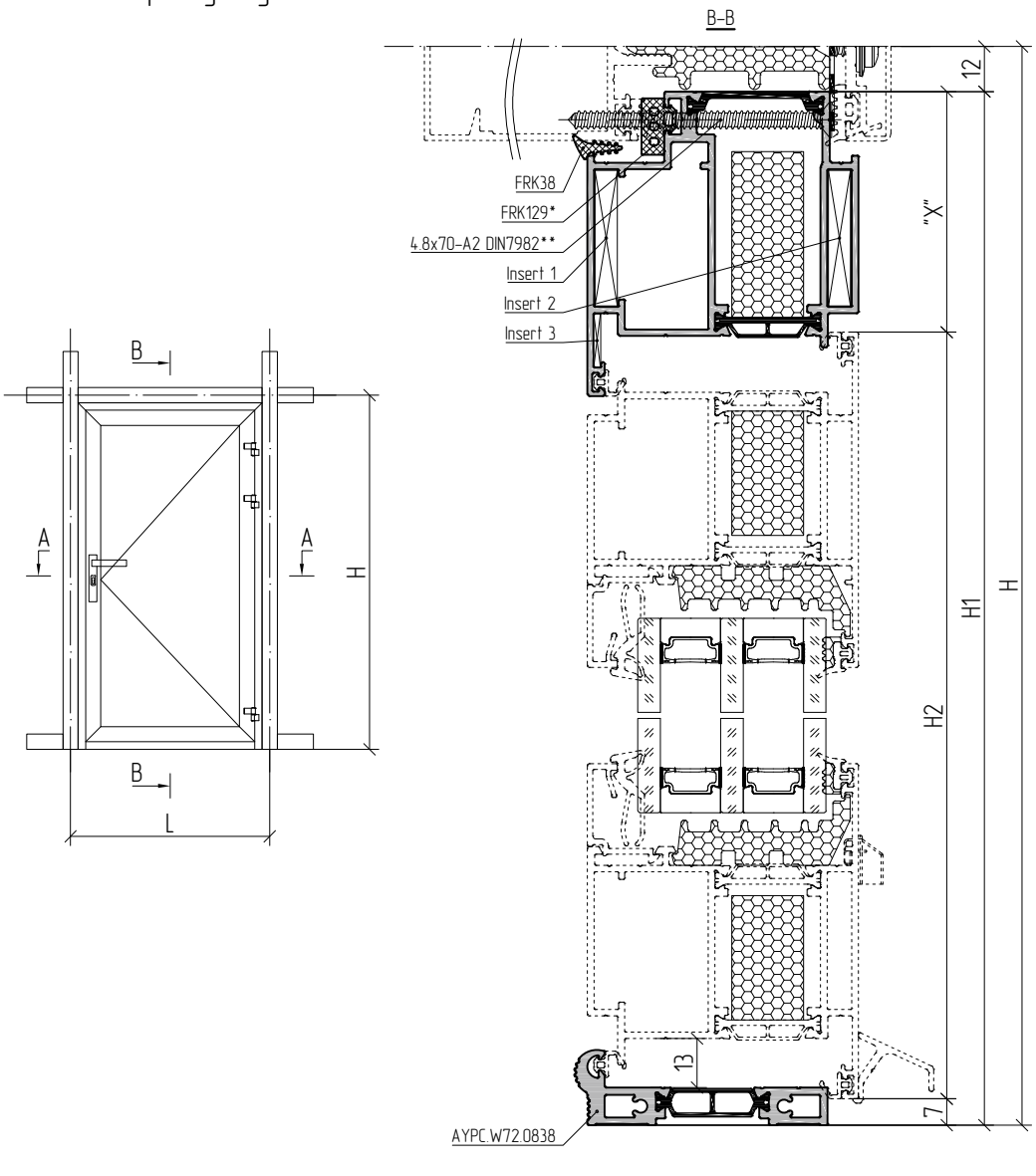

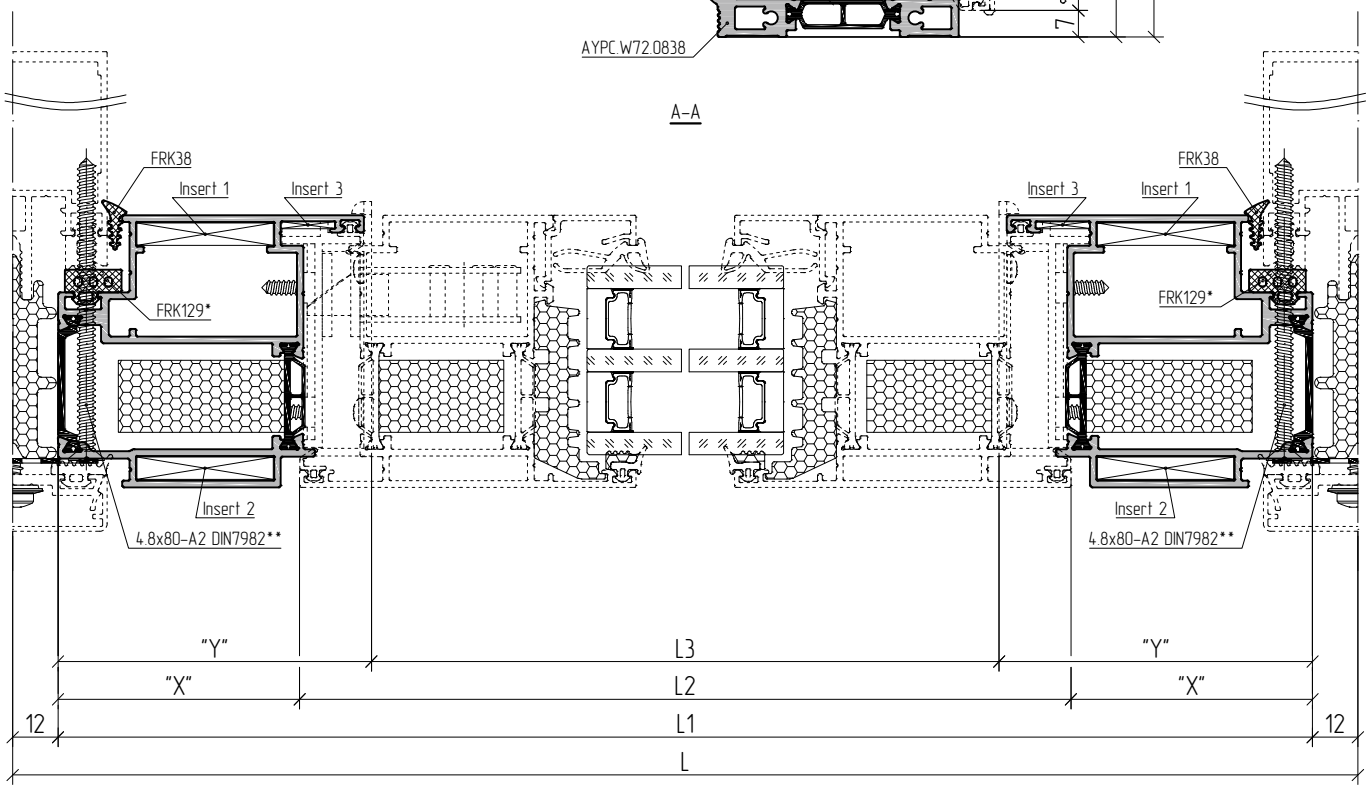

Calculation of outward opening single leaf door

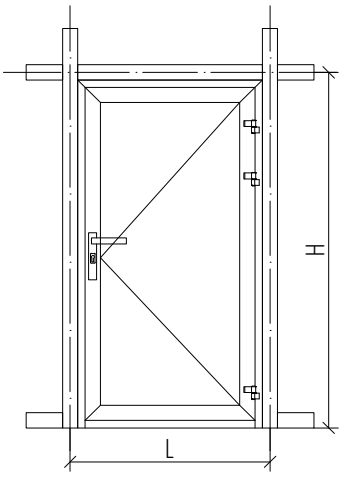

Frame profile	Gasket			Self-tapping screws			Ø10 mm plug
	FRK38	FRK129 *	FRK159	4.8x70-A2 DIN7982 **	4.8x80-A2 DIN7982 **	4.8x19-A2 DIN7981	AYPC.SL160.0928
AYPC.W72.0136, AYPC.W72.0137, AYPC.W72.0138, AYPC.W72.0139, AYPC.W72.0140, AYPC.W72.0141	L1+H1x2	L1+H1x2	–	L1/300	H1x2/300	–	–
AYPC.W72.0204, AYPC.W72.0205		–	L1+H1x2	–	–	(L1+H1)/300	(L1+H1)/300

Frame profile		Leaf profile		Threshold profile	Clamping corner		
Article	Dimension / Qty	Article	Dimension / Qty	Dimension / Qty	Clamping corner 1 / Qty	Clamping corner 2 / Qty	Clamping corner 3 / Qty
AYPC.W72.0136 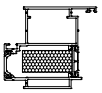	L1=L-24 / 1 pc H1=H-12 / 2 pcs	AYPC.W72.0204 AYPC.W72.0241 AYPC.W72.0204	L2=L1-128 / 1 pc L2=L1-128 / 1 pc H2=H1-71 / 2 pcs	L3=L1-166 / 1 pc	AYPC.W62.0937 2 pcs	AYPC.W62.0937 2 pcs	AYPC.W62.0957 2 pcs
AYPC.W72.0137 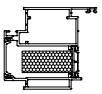	L1=L-24 / 1 pc H1=H-12 / 2 pcs	AYPC.W72.0204 AYPC.W72.0241 AYPC.W72.0204	L2=L1-128 / 1 pc L2=L1-128 / 1 pc H2=H1-71 / 2 pcs	L3=L1-166 / 1 pc	AYPC.W62.0937 2 pcs	AYPC.W62.0937 2 pcs	AYPC.W62.0957 2 pcs
AYPC.W72.0138	L1=L-24 / 1 pc H1=H-12 / 2 pcs	AYPC.W72.0204 AYPC.W72.0241 AYPC.W72.0204	L2=L1-82 / 1 pc L2=L1-82 / 1 pc H2=H1-48 / 2 pcs	L3=L1-120 / 1 pc	AYPC.W62.0952-06 2 pcs	AYPC.W62.0952 2 pcs	AYPC.W62.0957 2 pcs
AYPC.W72.0139	L1=L-24 / 1 pc H1=H-12 / 2 pcs	AYPC.W72.0204 AYPC.W72.0241 AYPC.W72.0204	L2=L1-82 / 1 pc L2=L1-82 / 1 pc H2=H1-48 / 2 pcs	L3=L1-120 / 1 pc	AYPC.W62.0952-06 2 pcs	AYPC.W62.0952 2 pcs	AYPC.W62.0957 2 pcs
AYPC.W72.0140 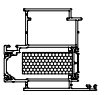	L1=L-24 / 1 pc H1=H-12 / 2 pcs	AYPC.W72.0205 AYPC.W72.0242 AYPC.W72.0205	L2=L1-128 / 1 pc L2=L1-128 / 1 pc H2=H1-71 / 2 pcs	L3=L1-166 / 1 pc	AYPC.W62.0937 2 pcs	AYPC.W62.0937 2 pcs	AYPC.W62.0957 2 pcs
AYPC.W72.0141 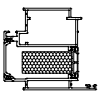	L1=L-24 / 1 pc H1=H-12 / 2 pcs	AYPC.W72.0205 AYPC.W72.0242 AYPC.W72.0205	L2=L1-128 / 1 pc L2=L1-128 / 1 pc H2=H1-71 / 2 pcs	L3=L1-166 / 1 pc	AYPC.W62.0937 2 pcs	AYPC.W62.0937 2 pcs	AYPC.W62.0957 2 pcs
AYPC.W72.0204 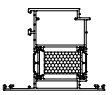	L1=L-14 / 1 pc H1=H-7 / 2 pcs	AYPC.W72.0205 AYPC.W72.0242 AYPC.W72.0205	L2=L1-144 / 1 pc L2=L1-144 / 1 pc H2=H1-79 / 2 pcs	L3=L1-182 / 1 pc	AYPC.W62.0937 2 pcs	AYPC.W62.0937 2 pcs	AYPC.W62.0957 4 pcs
AYPC.W72.0205 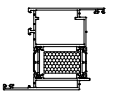	L1=L-14 / 1 pc H1=H-7 / 2 pcs	AYPC.W72.0204 AYPC.W72.0241 AYPC.W72.0204	L2=L1-144 / 1 pc L2=L1-144 / 1 pc H2=H1-79 / 2 pcs	L3=L1-182 / 1 pc	AYPC.W62.0937 2 pcs	AYPC.W62.0937 2 pcs	AYPC.W62.0957 4 pcs

Note:
* Gasket selection depends on infill unit thickness (see section 05.04 – Table of glazing).
** Self-tapping screws selection depends on infill unit thickness (see section 05.04 – Table of glazing).
Information on selection and calculation of profiles and accessories is available in section 03.05

Correspondence table of clamping corners

Corner connection of frame profiles

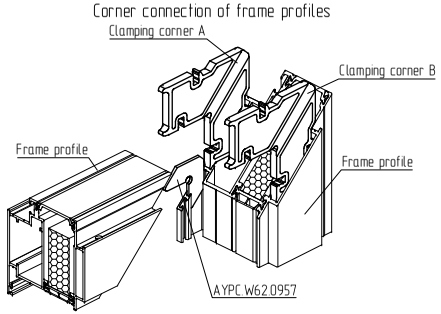

Article	Clamping corner A	Clamping corner B
AYPC.W72.0136 AYPC.W72.0137 AYPC.W72.0140 AYPC.W72.0141	AYPC.W62.0937	AYPC.W62.0937
AYPC.W72.0138 AYPC.W72.0139	AYPC.W62.0952-06	AYPC.W62.0952

Corner crimping profile

AYPC.C48.0702

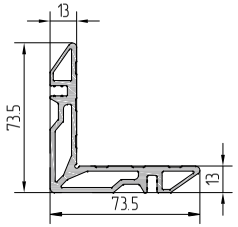

Clamping corners made from AYPC.C48.0702 profile

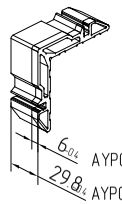

AYPC.W62.0952

AYPC.W62.0952-06

AYPC.W62.0937 casted clamping corner

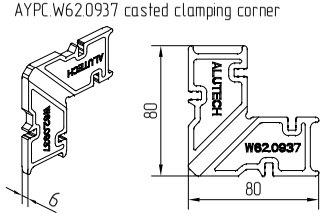

Profile machining for pin corner connection

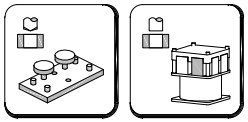

AYPC.W72.1980 PW72.5

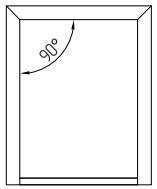

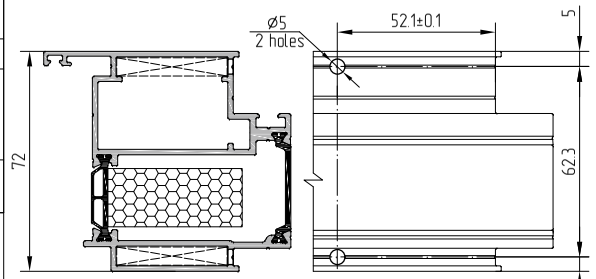

AYPC.W72.0136, AYPC.W72.0137

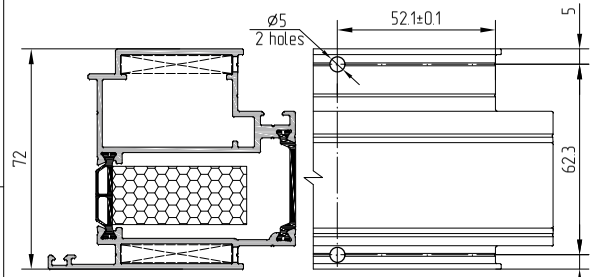

AYPC.W72.0140, AYPC.W72.0141

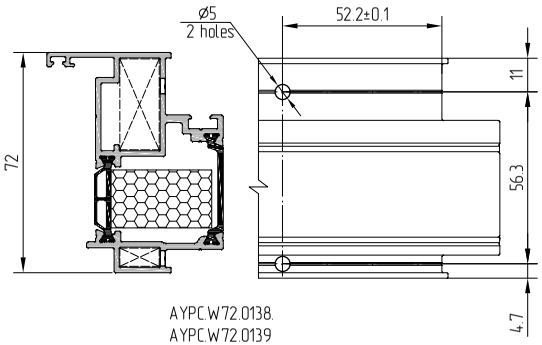

AYPC.W72.0138, AYPC.W72.0139

Corner connection by crimping

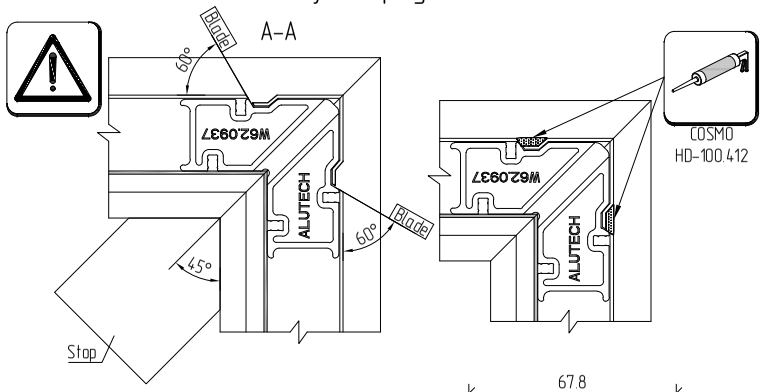

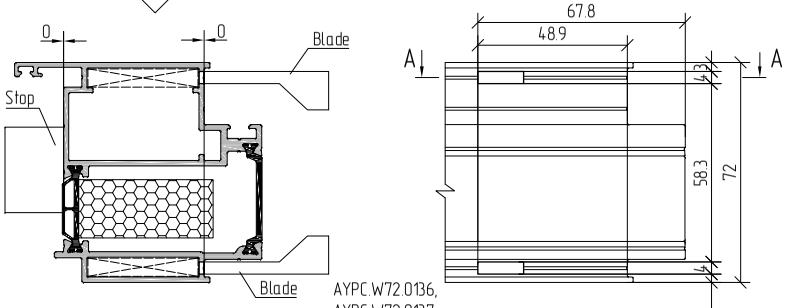

AYPC.W72.0136, AYPC.W72.0137

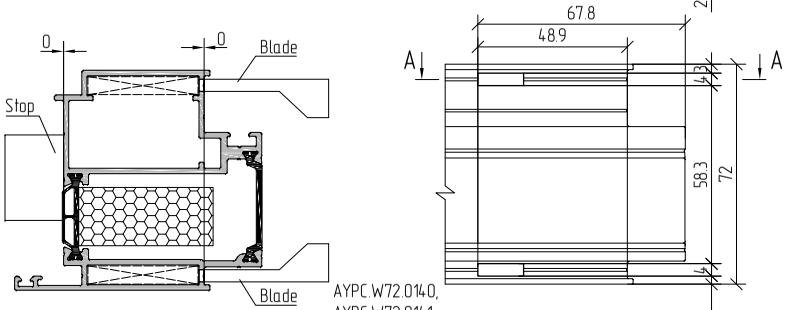

AYPC.W72.0140, AYPC.W72.0141

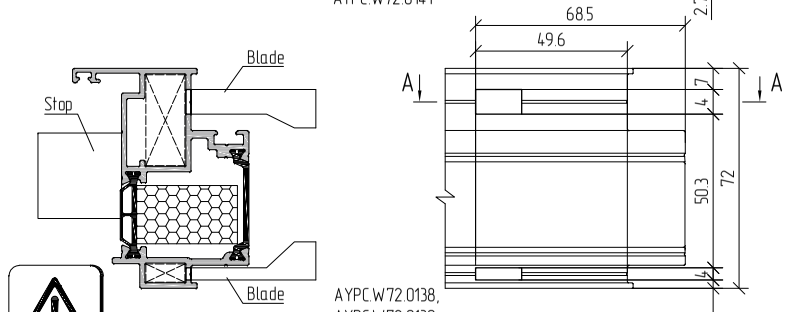

AYPC.W72.0138, AYPC.W72.0139

Stop is shown schematically and depends on used tools

ALUTECH PROFILE SYSTEMS

Assembly sequence of frame corner connection made from special frame profiles

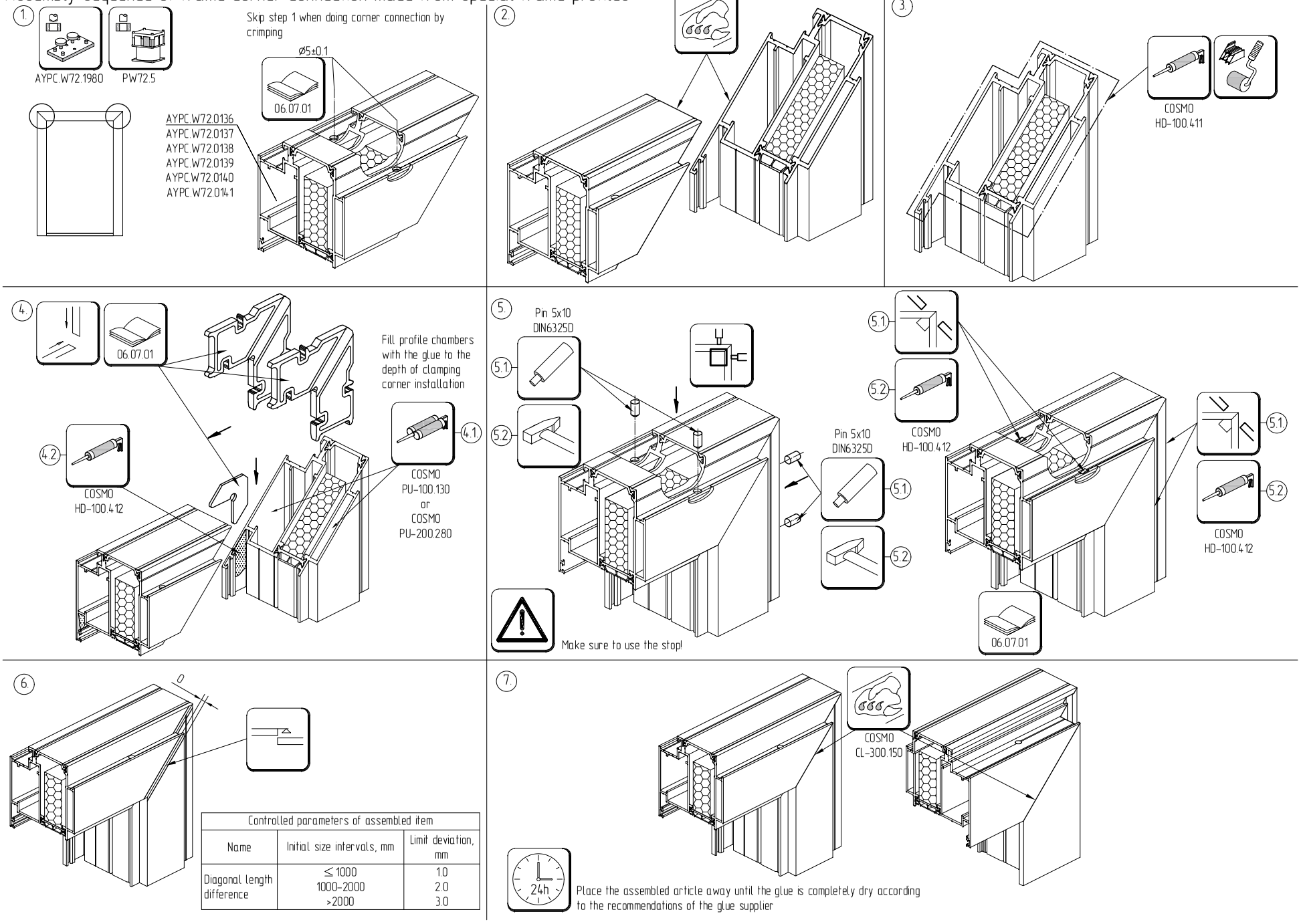

Controlled parameters of assembled item		
Name	Initial size intervals, mm	Limit deviation, mm
Diagonal length difference	≤ 1000 1000–2000 >2000	1.0 2.0 3.0

Corner connection of AYPC.W72.0204, AYPC.W72.0205 frame profiles

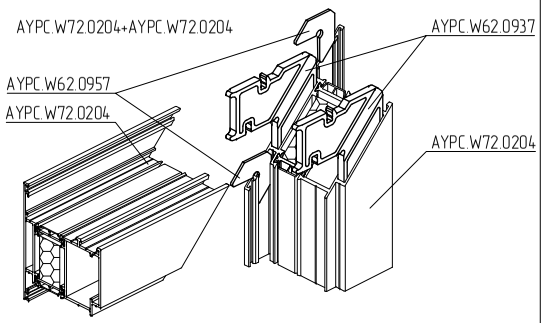

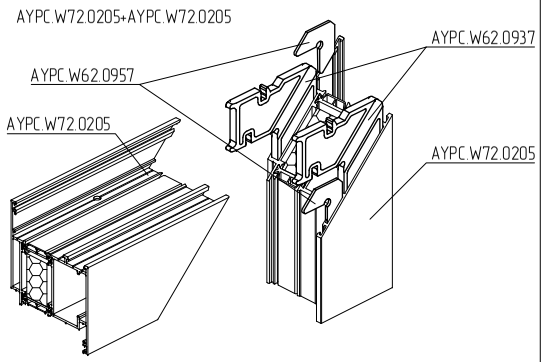

AYPC.W62.0937 casted clamping corner

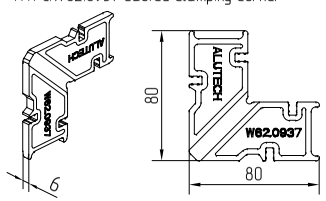

Profile machining for pin corner connection

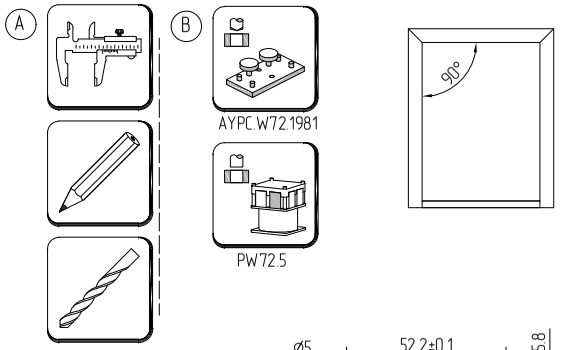

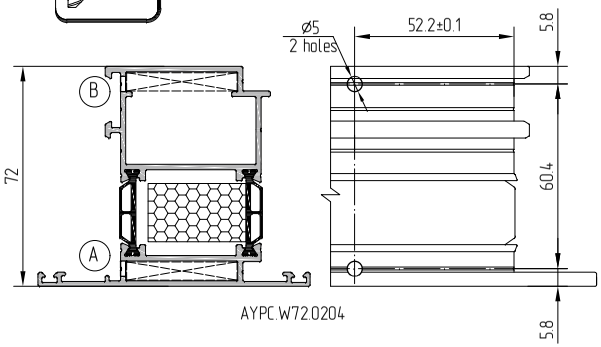

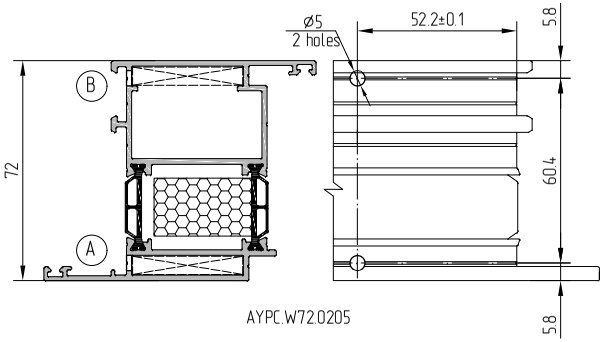

Corner connection by crimping

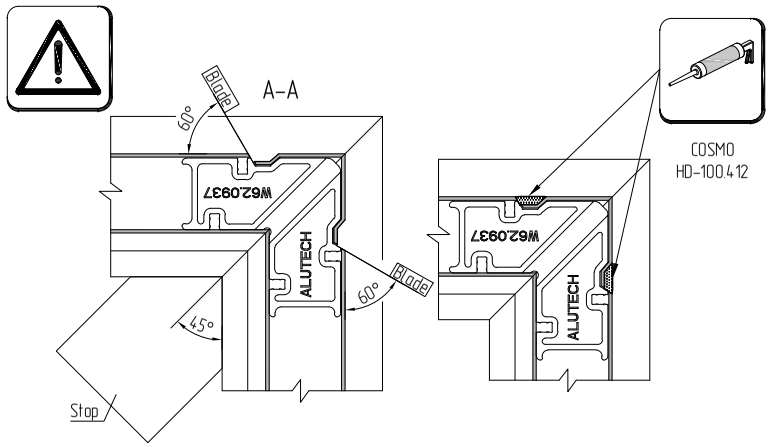

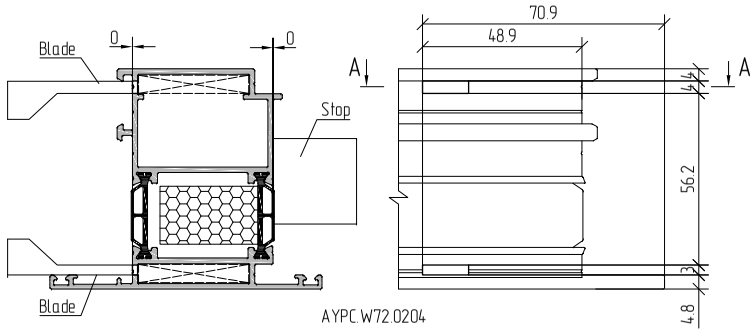

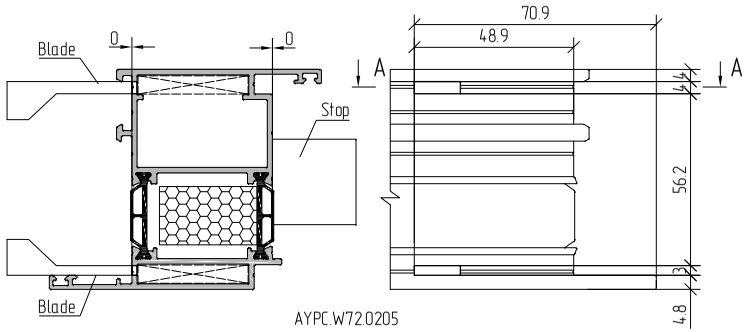

Stop is shown schematically and depends on the used tools

Assembly sequence of frame corner connection using leaf profiles

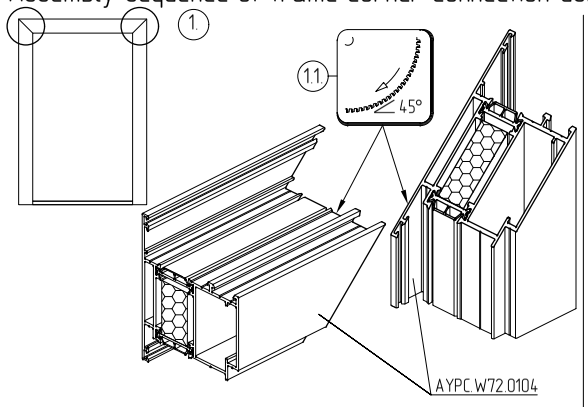

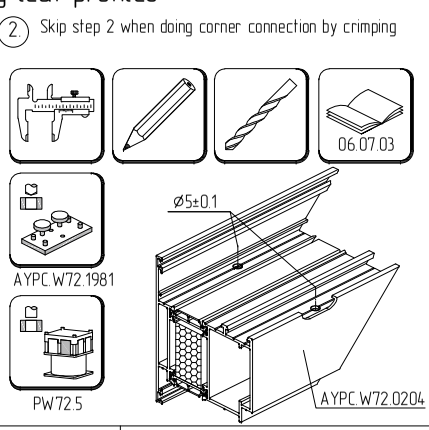

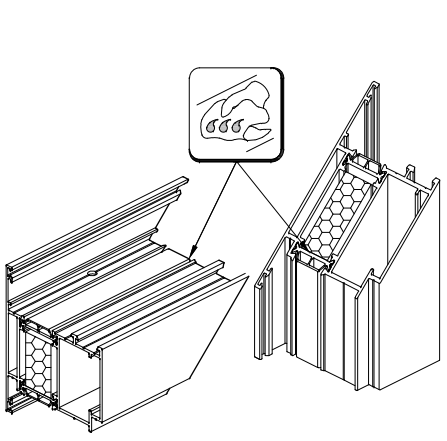

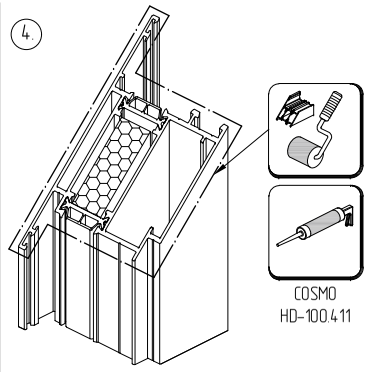

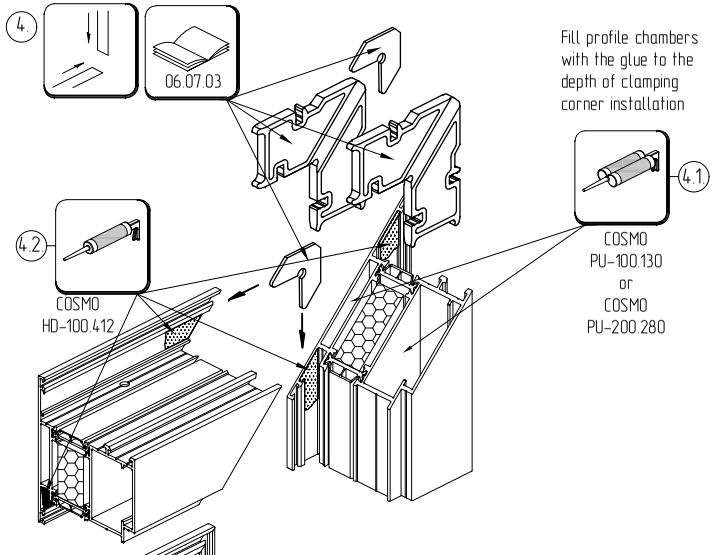

Fill profile chambers with the glue to the depth of clamping corner installation

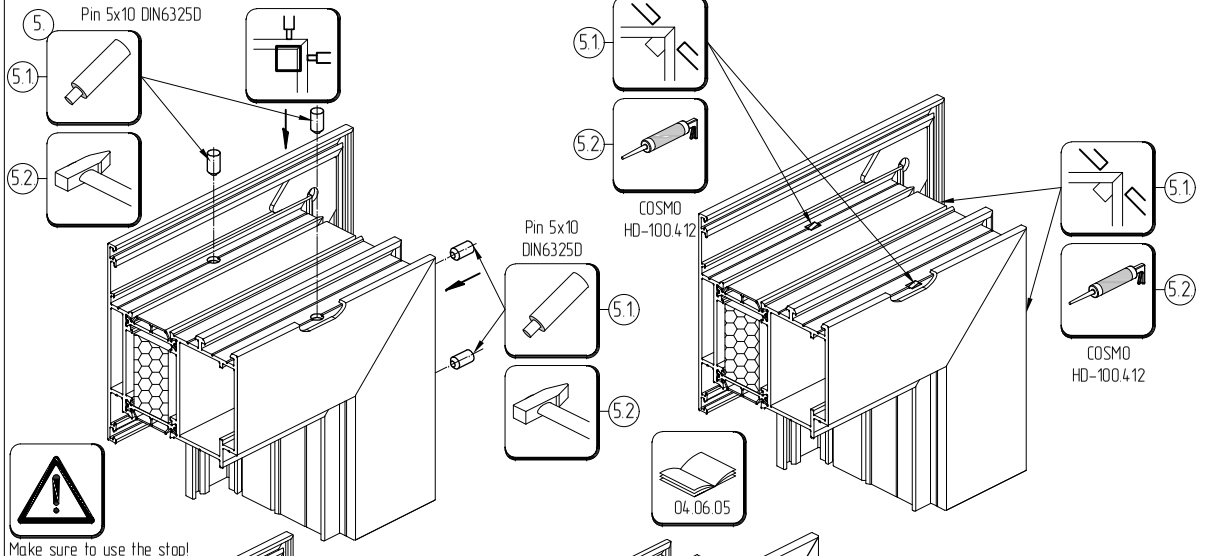

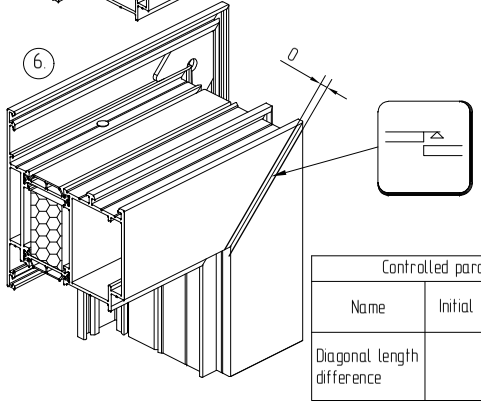

Controlled parameters of assembled item		
Name	Initial size intervals, mm	Limit deviation, mm
Diagonal length difference	≤ 1000 1000–2000 >2000	1.0 2.0 3.0

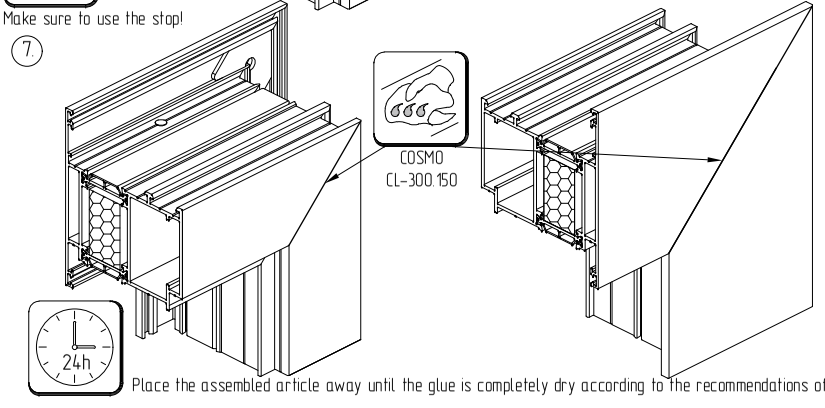

Place the assembled article away until the glue is completely dry according to the recommendations of the glue supplier

Door installation with AYPC.W72.0136, AYPC.W72.0137, AYPC.W72.0138 and AYPC.W72.0139 profiles

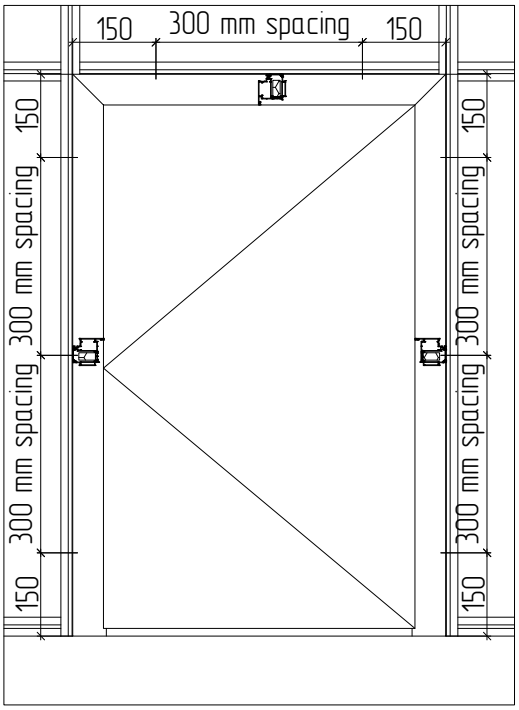

Machining of AYPC.W72.0137 and AYPC.F50.0103 profiles for 4.8x70-A2 DIN7982

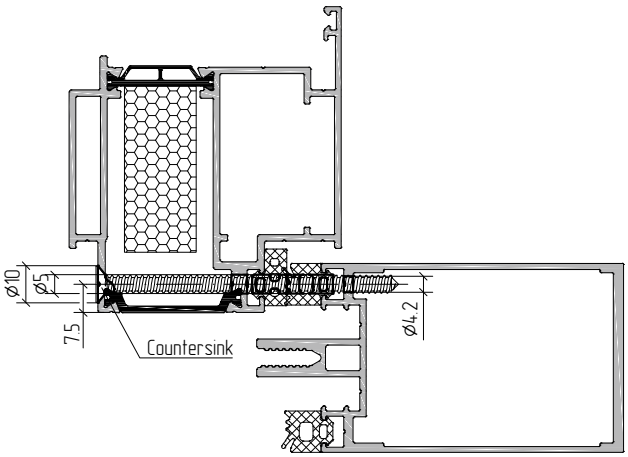

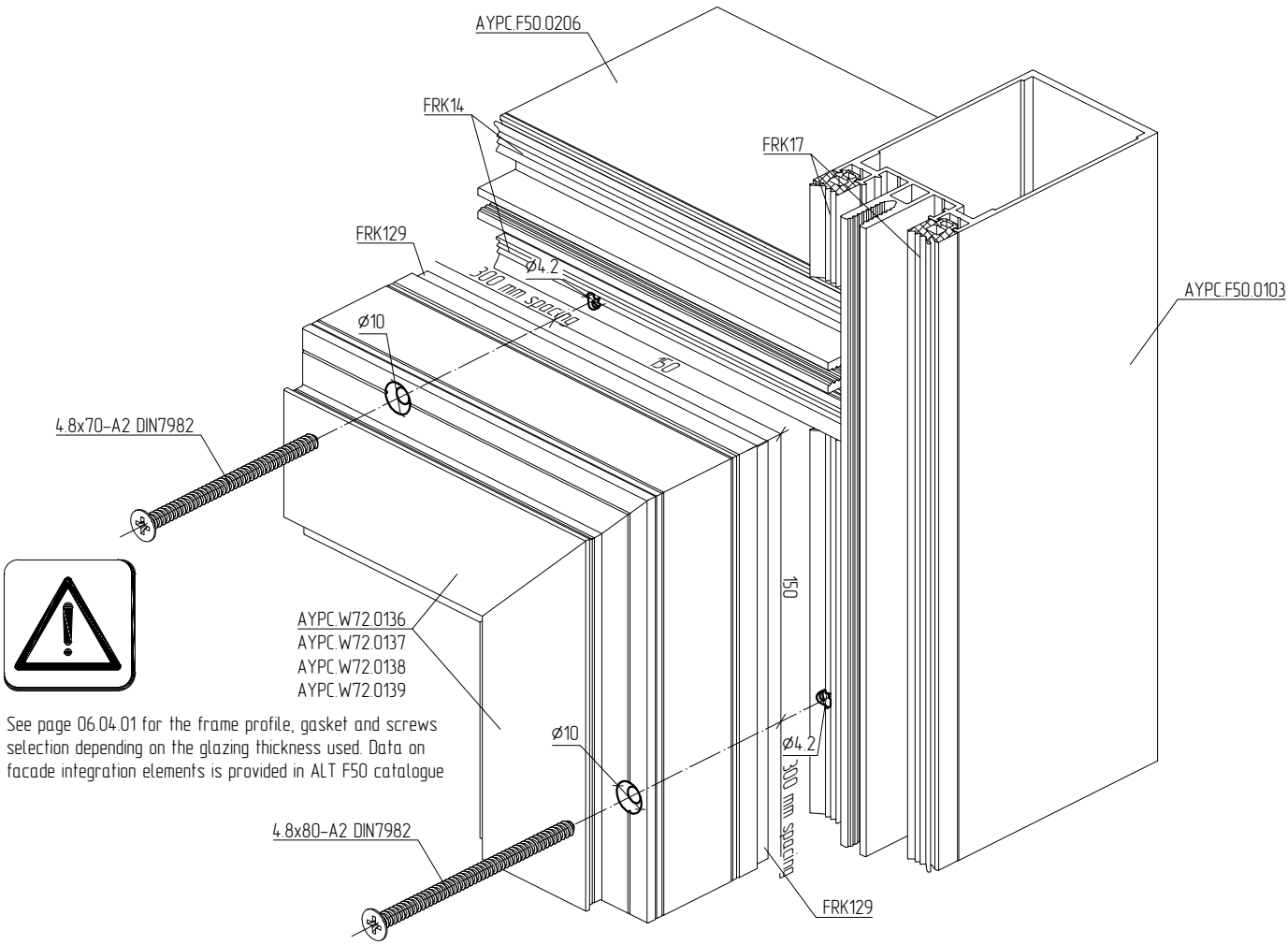

See page 06.04.01 for the frame profile, gasket and screws selection depending on the glazing thickness used. Data on facade integration elements is provided in ALT F50 catalogue

Door installation with AYPC.W72.0140 and AYPC.W72.0141 frame profiles

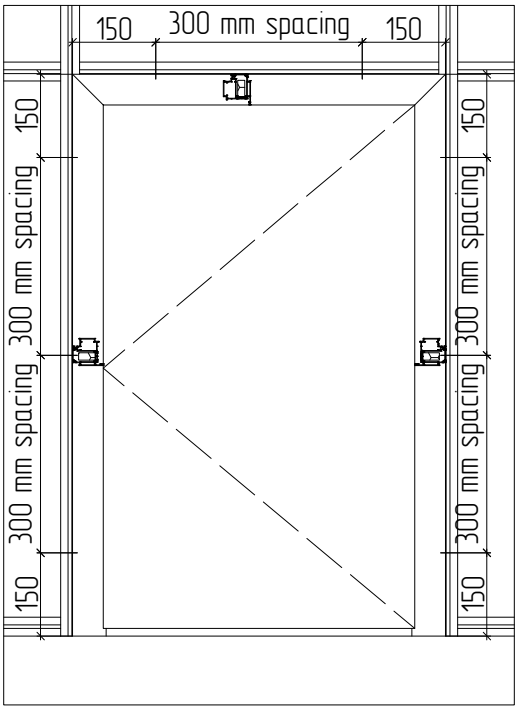

AYPC.W72.0141 and AYPC.F50.0103 profiles machining for 4.8x70-A2 DIN7982

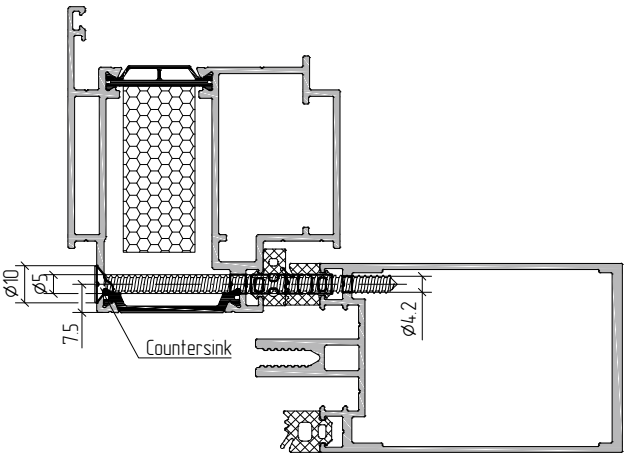

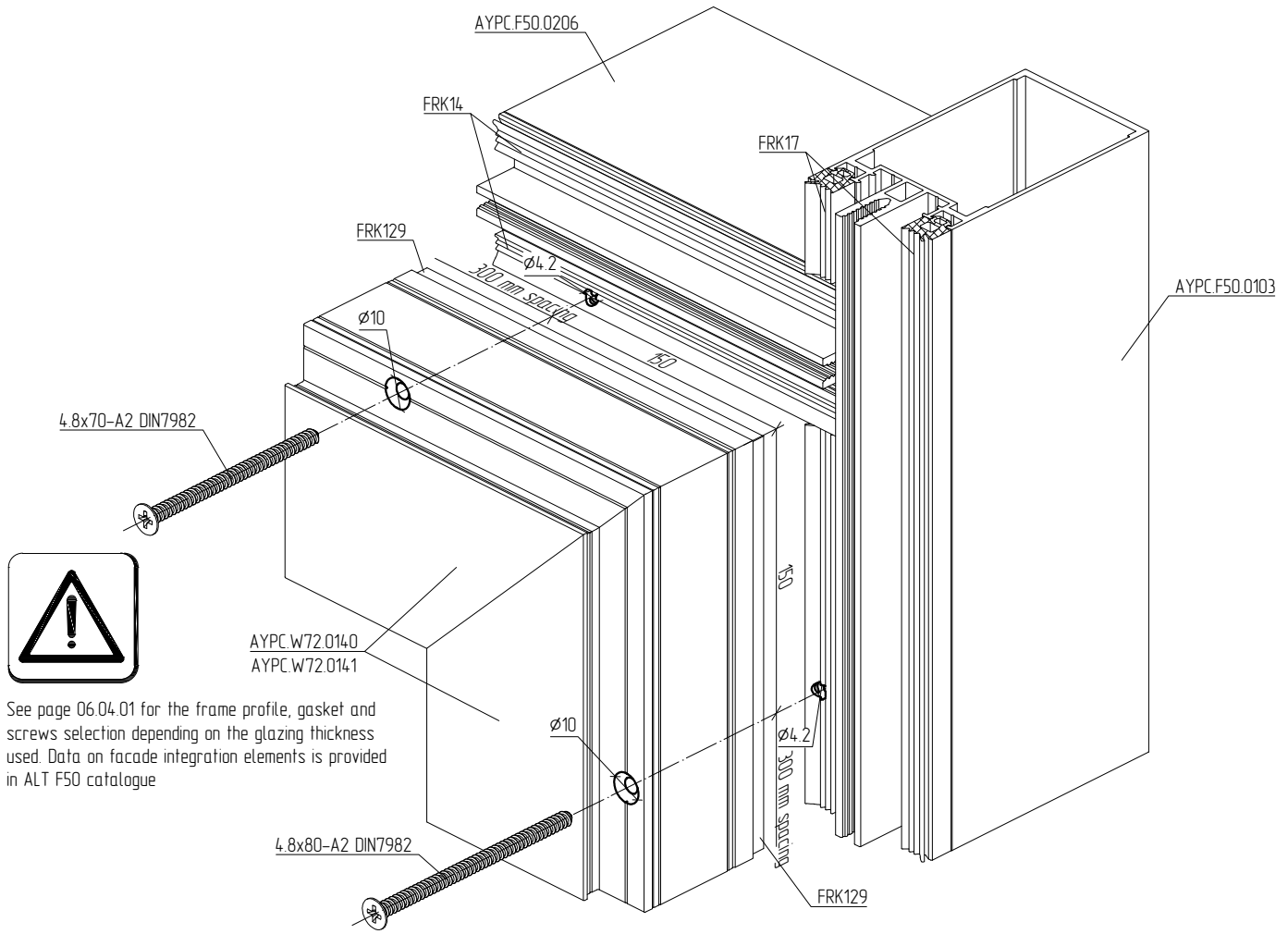

See page 06.04.01 for the frame profile, gasket and screws selection depending on the glazing thickness used. Data on facade integration elements is provided in ALT F50 catalogue

Door installation with AYPC.W72.0205 leaf profile

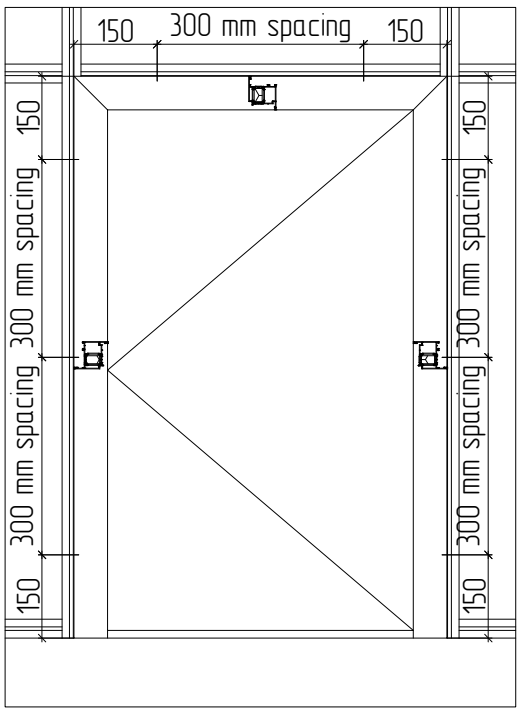

Machining of transom bar profile and mullion/transom profile for 4.8x19-A2 DIN7981

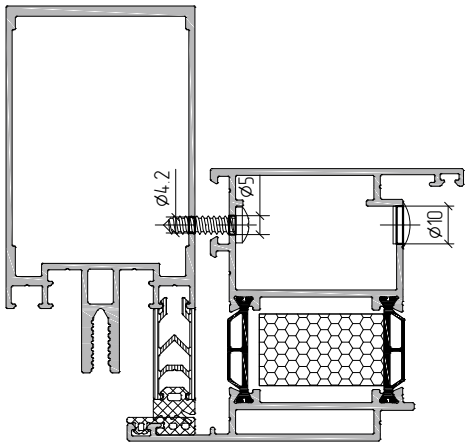

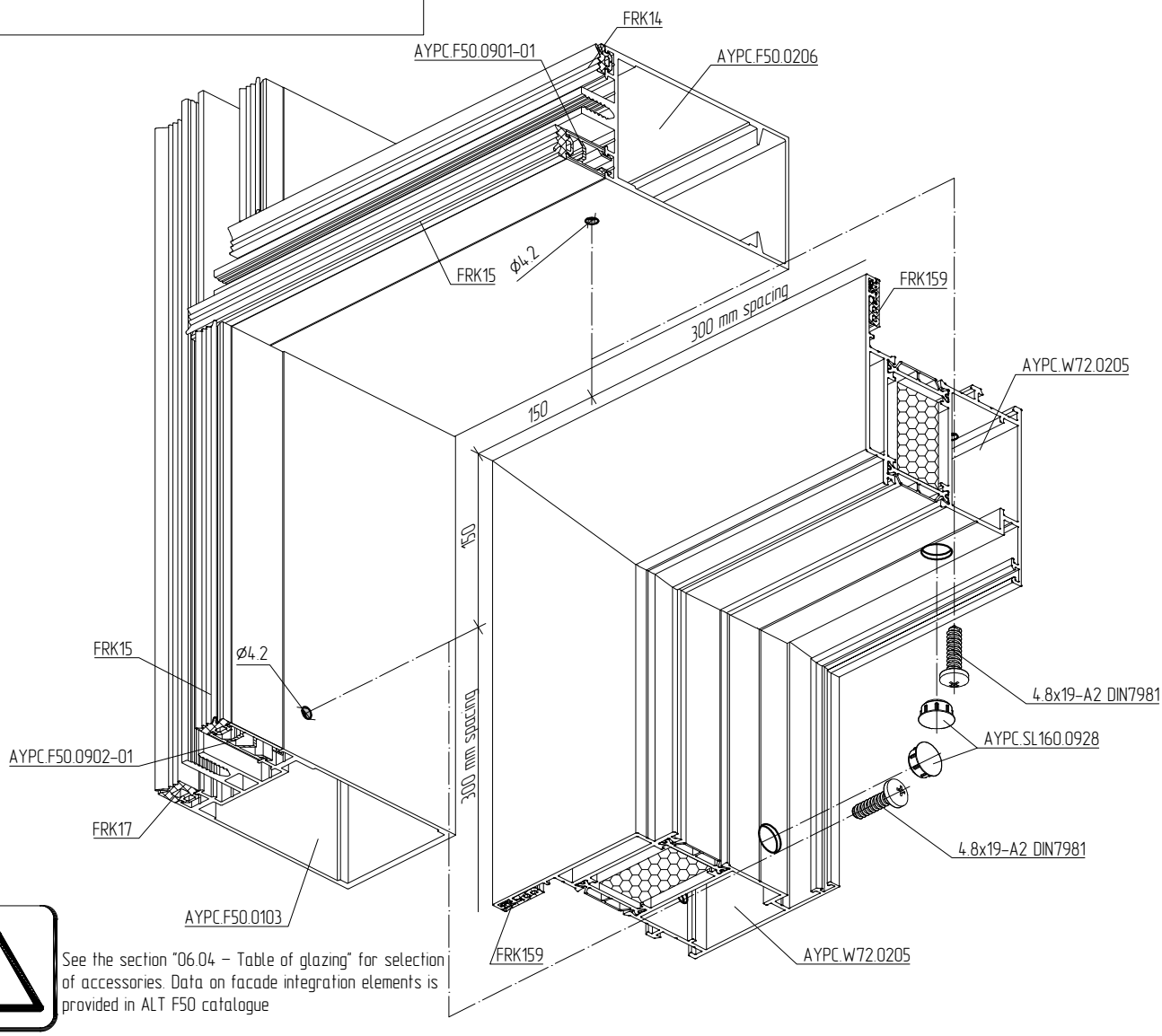

See the section "06.04 – Table of glazing" for selection of accessories. Data on facade integration elements is provided in ALT F50 catalogue

Door installation with AYPC.W72.0204 leaf profile

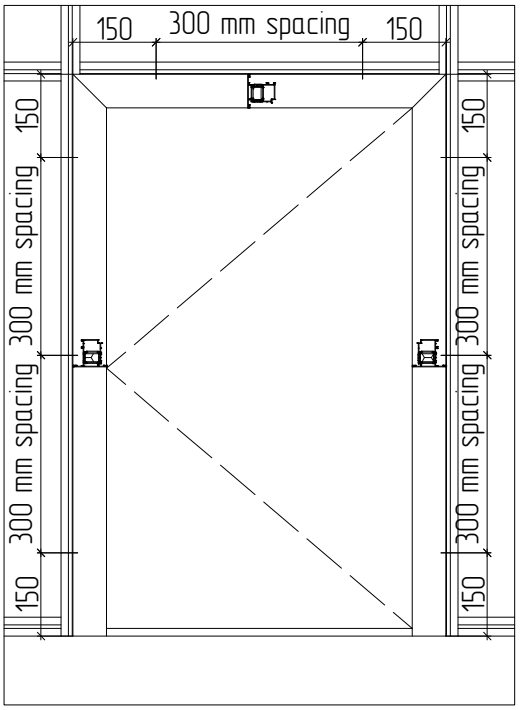

Machining of transom bar profile and mullion/transom profile for 4.8x19-A2 DIN7981

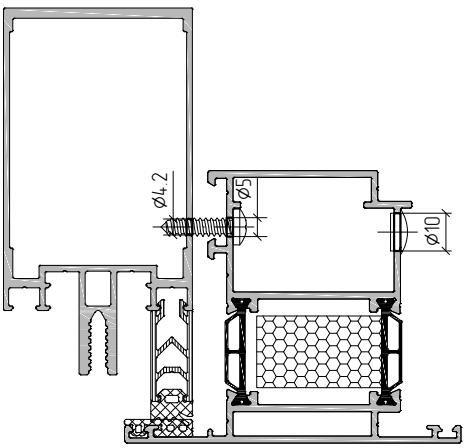

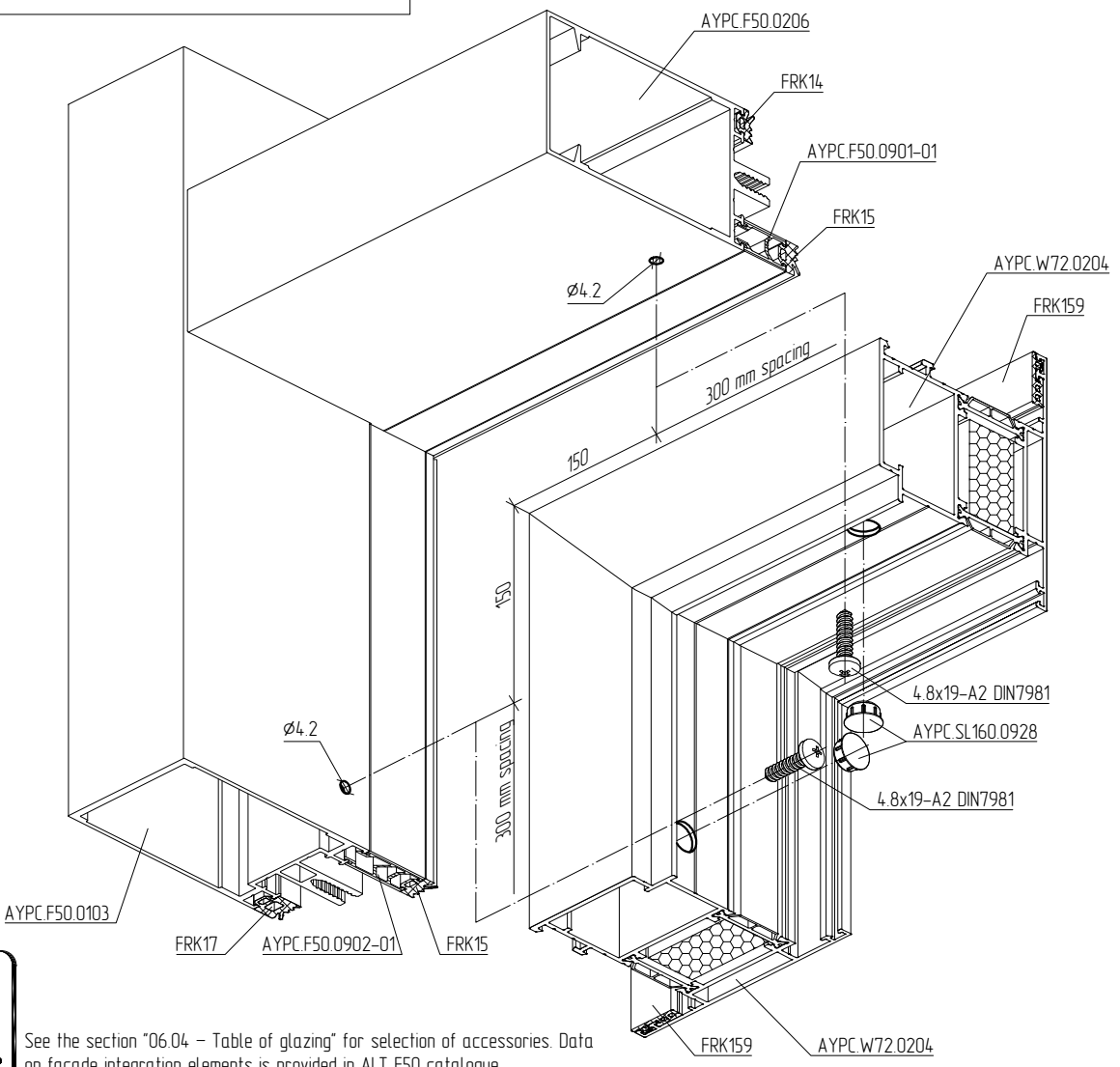

See the section "06.04 – Table of glazing" for selection of accessories. Data on facade integration elements is provided in ALT F50 catalogue

Installation of FRK159 gasket

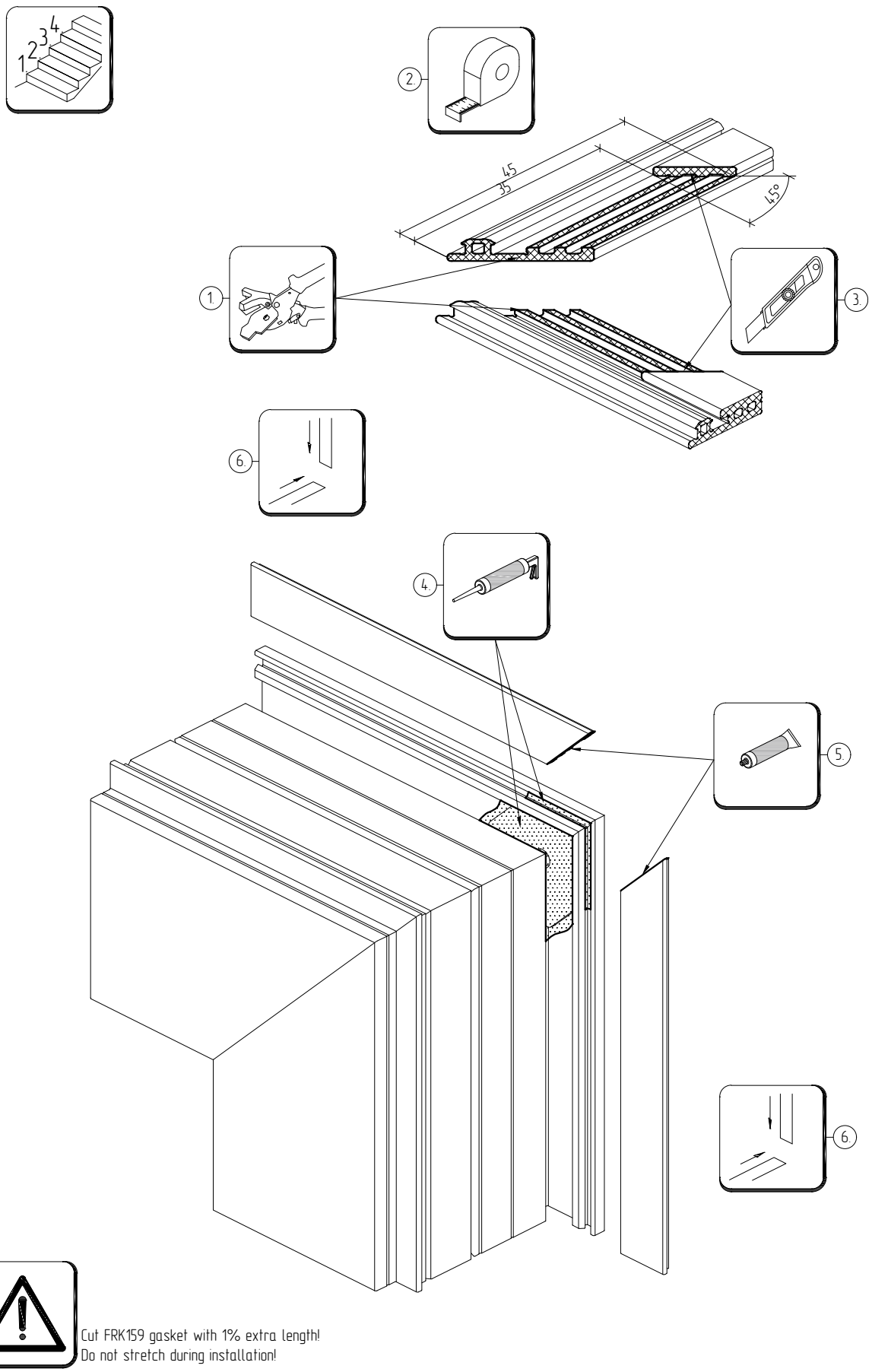

Cut FRK159 gasket with 1% extra length!
Do not stretch during installation!

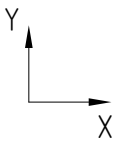

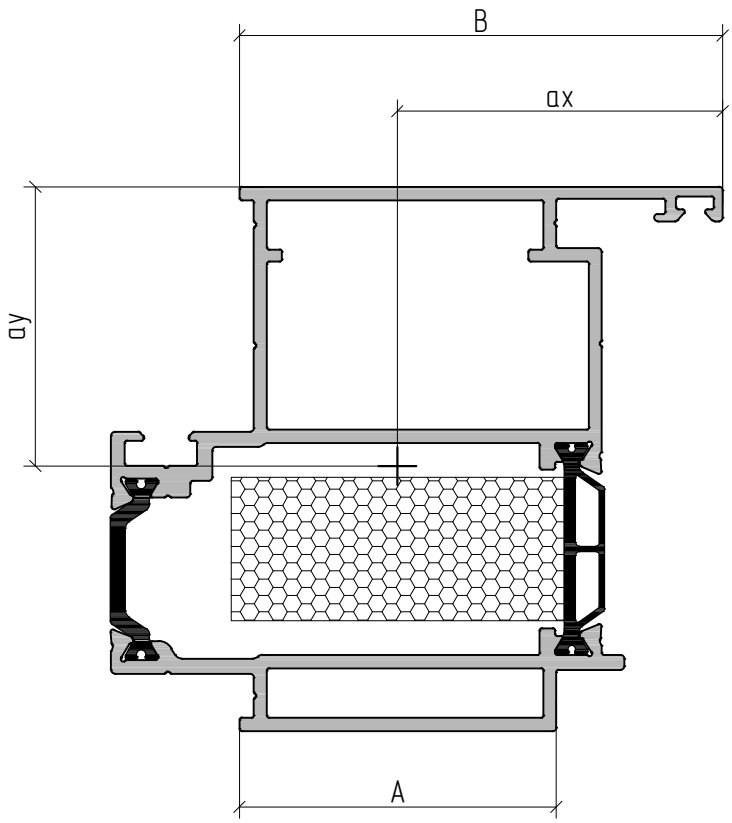

Profile	m, kg/m	S, mm^2	Jx, cm^4	Wx, cm^3	ay, mm	Jy, cm^4	Wy, cm^3	ax, mm	A, mm	B, mm
AYPC.W72.0136	1.908	790.8	32.1	8.7	36.92	30.88	7.2	43.02	41.9	63.9
AYPC.W72.0137	1.969	831.2	32.8	9.2	35.61	31.89	7.3	43.54	41.9	63.9
AYPC.W72.0138	1.450	621.0	21.9	6.2	35.53	9.67	3.1	31.37	18.7	40.7
AYPC.W72.0139	1.478	649.1	22.4	6.6	33.67	9.68	3.1	31.40	18.7	40.7
AYPC.W72.0140	1.907	790.4	30.8	7.49	41.16	30.84	7.16	43.05	63.9	41.9
AYPC.W72.0141	1.968	830.8	32.1	8.06	39.78	31.83	7.31	43.56	63.9	41.9

ALUTECH ALTW72
Windows and doors
with thermal break

SILLS INSTALLATION IN ALT BF73 SYSTEM

07.01.01 Order information

07.02.01 Accessories

07.03.01 Sections and junctions

07.04.01 Machining and assemblage

Article	Name / Drawing	Weight, kg/rm	Exterior perimeter, mm	Cross sectional area, mm^2	Code	Profile colour	Bar length, rm	Packing quantity		Weight of a pack	
								pcs	rm	Net, kg	Gross, kg
AYPC.BF73.0401	Drainage sub sill 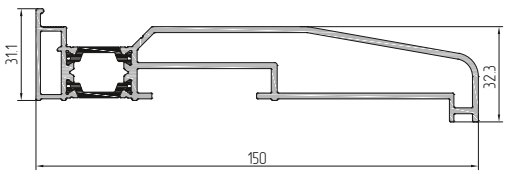	2.21	455	870	12700600 12700621 12700631 127006808	00 RAL9016 RAL9006 A00-D6	6.5	2	13	28.7 29.4 29.4 28.7	28.9 29.6 29.6 28.9
AYPC.BF73.0402	Drainage sub sill 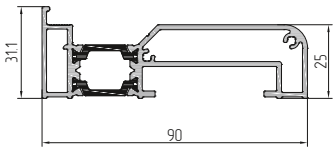	1.45	291.1	587	12702100 12702121 12702131 127021808	00 RAL9016 RAL9006 A00-D6	6.5	2	13	18.9 19.3 19.3 18.9	19.0 19.5 19.5 19.0
AYPC.BF73.0403	Drainage sub sill 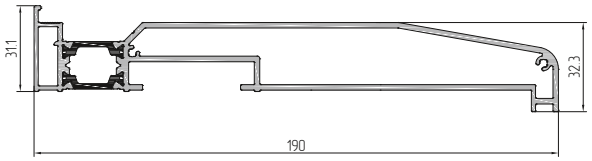	2.69	527	1049	12702200 12702221 12702231 127022808	00 RAL9016 RAL9006 A00-D6	6.5	2	13	35.0 35.8 35.8 35.0	35.2 36.0 36.0 35.2
AYPC.BF73.0404	Drainage sub sill 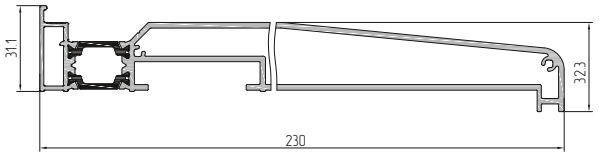	3.12	584.8	1204	12702300 12702321 12702331 127023808	00 RAL9016 RAL9006 A00-D6	6.5	2	13	40.6 41.5 41.5 40.6	40.8 41.7 41.7 40.8
AYPC.BF73.0405	Drainage sub sill 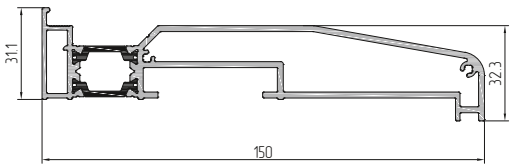	2.25	455	888	12702700 12702721 12702731 127021808	00 RAL9016 RAL9006 A00-D6	6.5	2	13	29.3 29.9 29.9 29.3	29.5 30.1 30.1 29.5

Image	Code	Article	Application
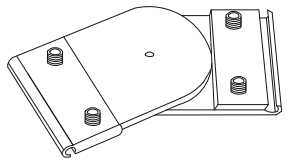	12753500	DBA1-108	Adjustable angle corner connector
			For the sub sill profiles: AYPC.BF73.0401, AYPC.BF73.0402, AYPC.BF73.0403, AYPC.BF73.0404, AYPC.BF73.0405.
			Qty in pack – 1 pcs
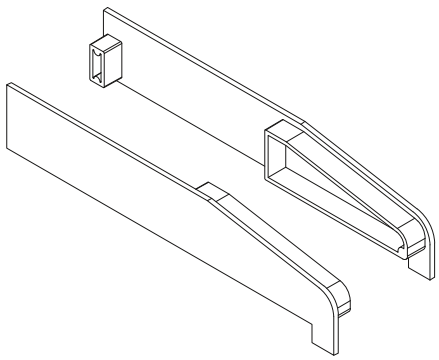	12751601	DBA1-203N Colour: white	Kit of 150 mm sill end caps.
	12751600	DBA1-203N Colour: black	For the sub sill profile AYPC.BF73.0401.
			Qty in pack – 10 kits
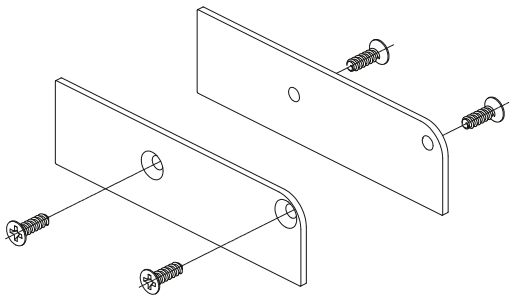	12752000	AYPC.BF73.2402K 00	Kit of 90 mm sill end caps.
	12752021	AYPC.BF73.2402K RAL9016	
	12752031	AYPC.BF73.2402K RAL9006	
	127520806	AYPC.BF73.2402K A00-E6	For the sub sill profile AYPC.BF73.0402.
			Qty in pack – 20 kits
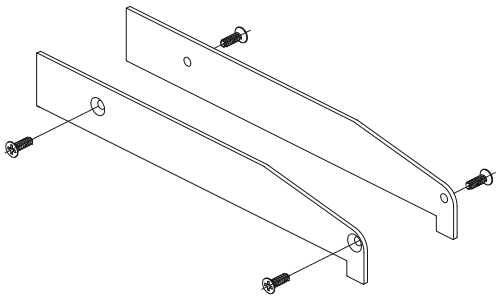	12752100	AYPC.BF73.2403K 00	Kit of 190 mm sill end caps.
	12752121	AYPC.BF73.2403K RAL9016	
	12752131	AYPC.BF73.2403K RAL9006	
	127521806	AYPC.BF73.2403K A00-E6	For the sub sill profile AYPC.BF73.0403.
			Qty in pack – 20 kits
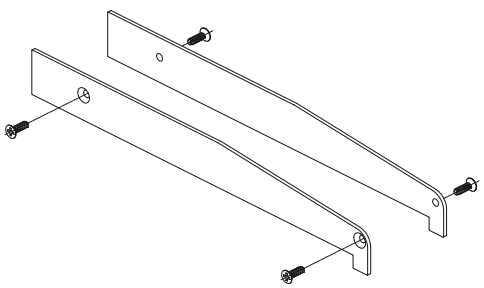	12752200	AYPC.BF73.2404K 00	Kit of 230 mm sill end caps.
	12752221	AYPC.BF73.2404K RAL9016	
	12752231	AYPC.BF73.2404K RAL9006	
	127522806	AYPC.BF73.2404K A00-E6	For the sub sill profile AYPC.BF73.0404.
			Qty in pack – 20 kits
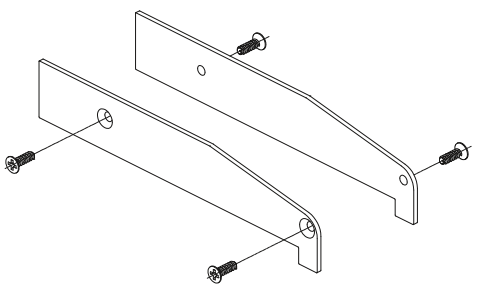	12752300	AYPC.BF73.2405K 00	Kit of 150 mm sill end caps.
	12752321	AYPC.BF73.2405K RAL9016	
	12752331	AYPC.BF73.2405K RAL9006	
	127523806	AYPC.BF73.2405K A00-E6	For the sub sill profile AYPC.BF73.0405.
			Qty in pack – 20 kits

1–1

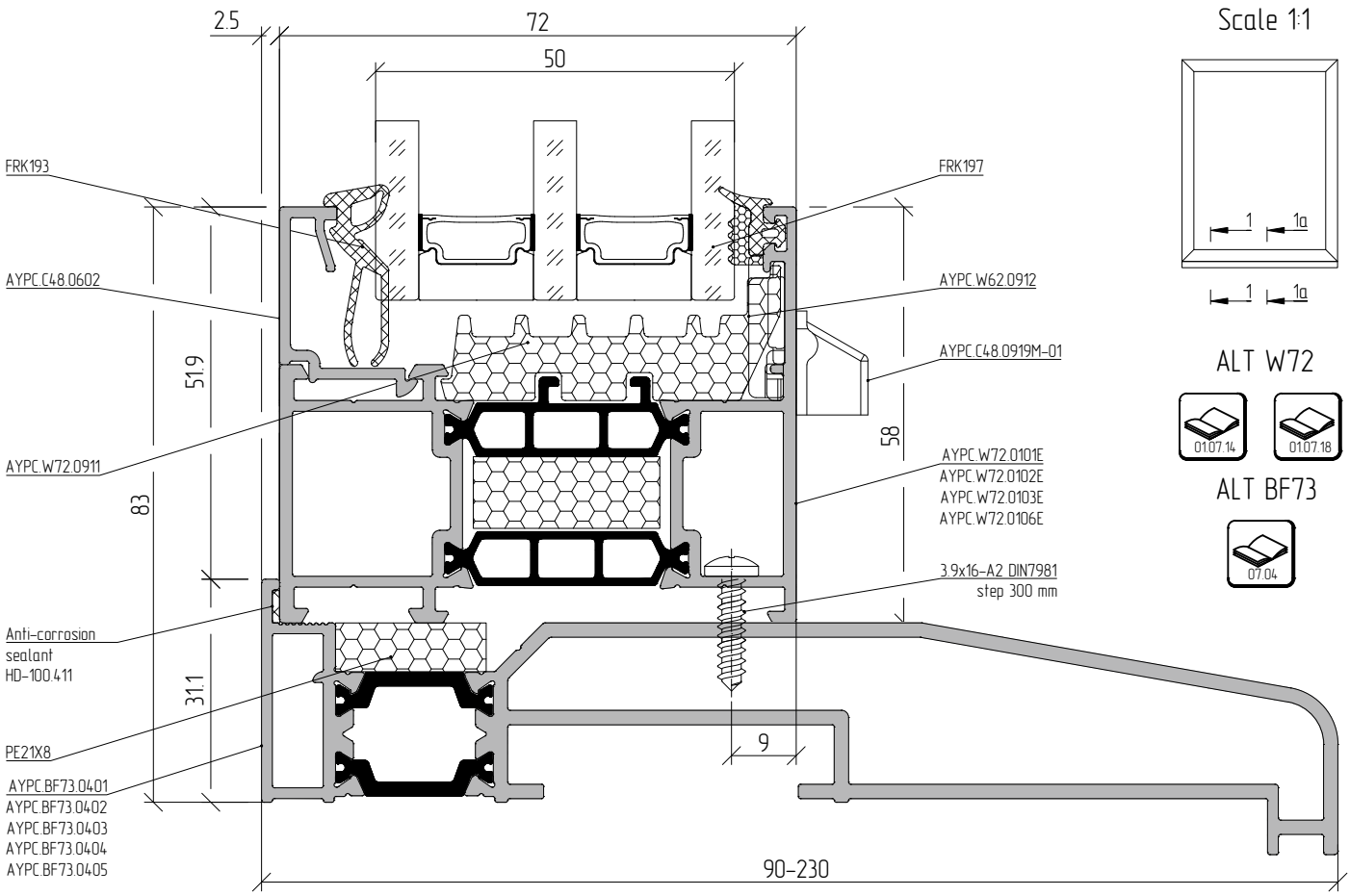

Scale 1:1

ALT W72

ALT BF73

1a–1a

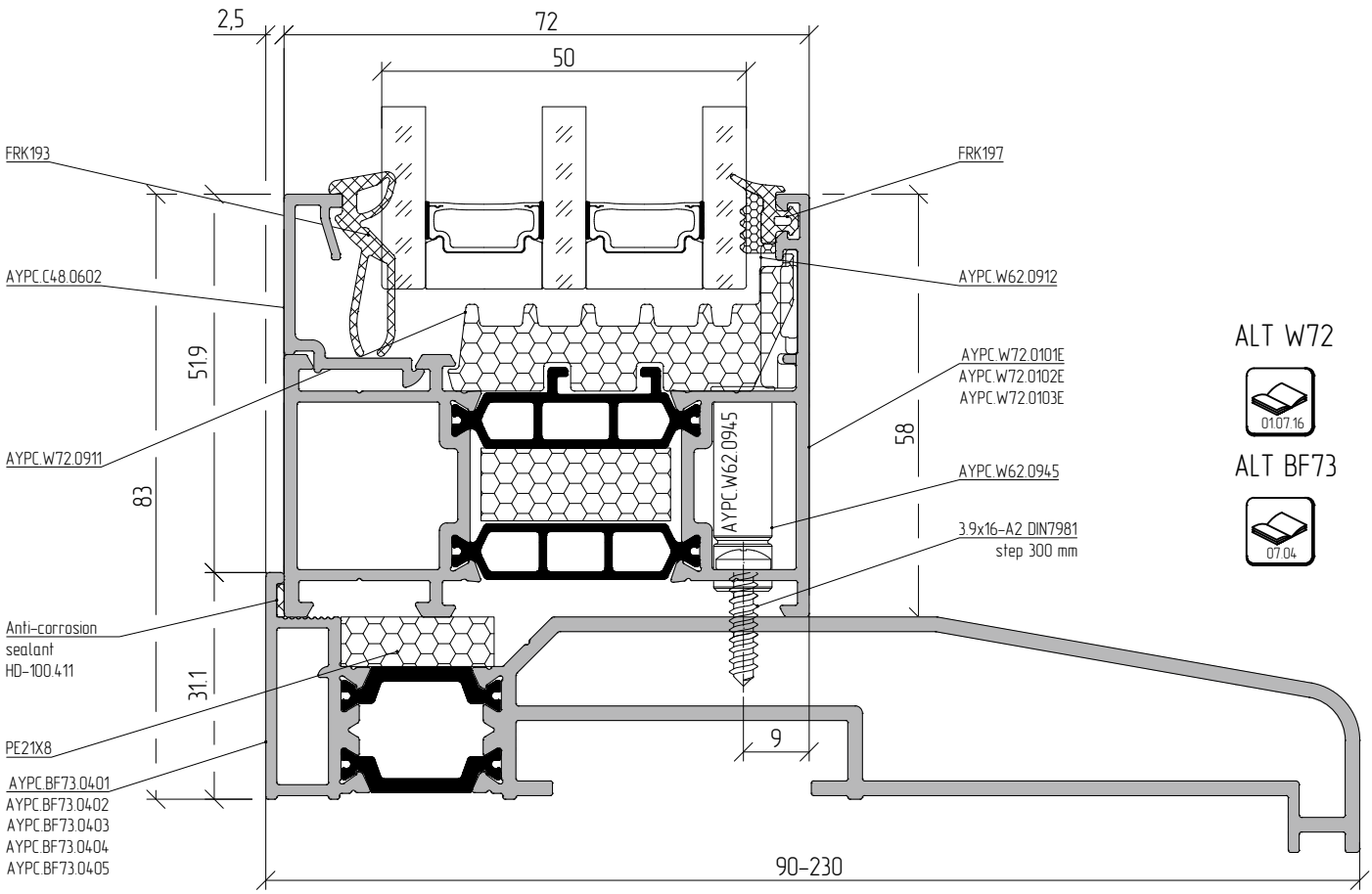

ALT W72

ALT BF73

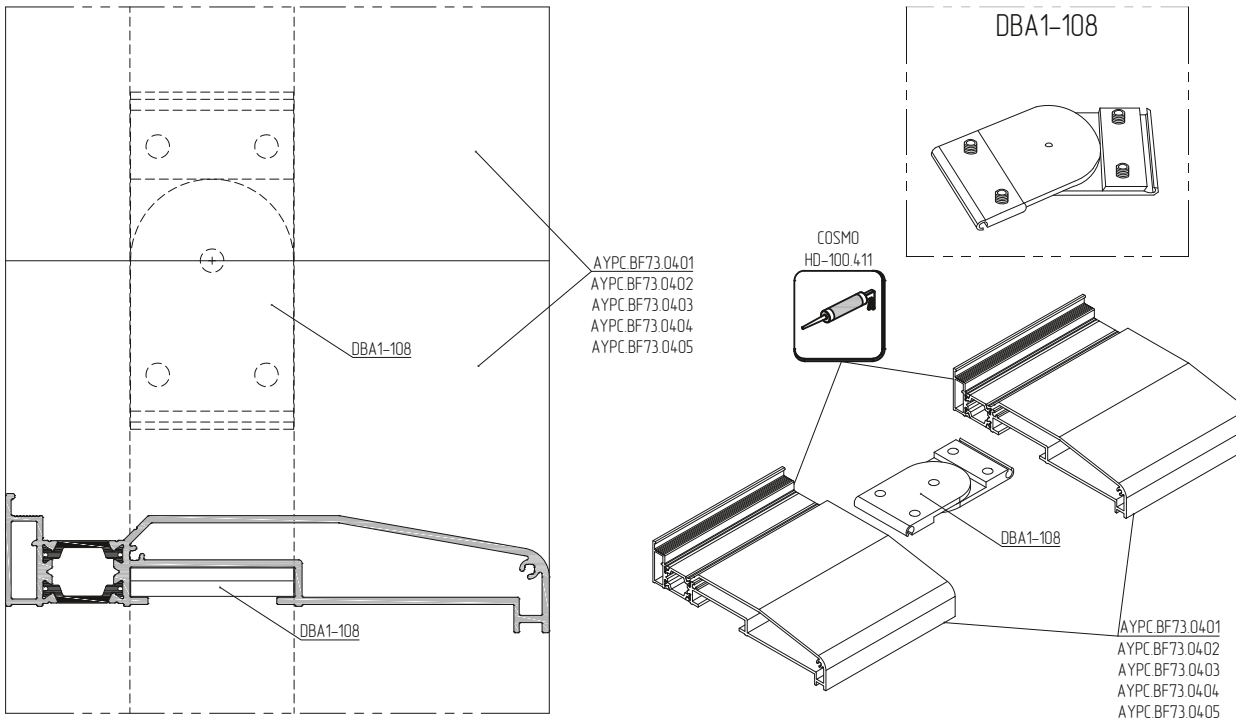
DBA1-108
AYPC.BF73.0401
AYPC.BF73.0402
AYPC.BF73.0403
AYPC.BF73.0404
AYPC.BF73.0405
DBA1-108
DBA1-108
COSMO
HD-100.411
DBA1-108
AYPC.BF73.0401
AYPC.BF73.0402
AYPC.BF73.0403
AYPC.BF73.0404
AYPC.BF73.0405

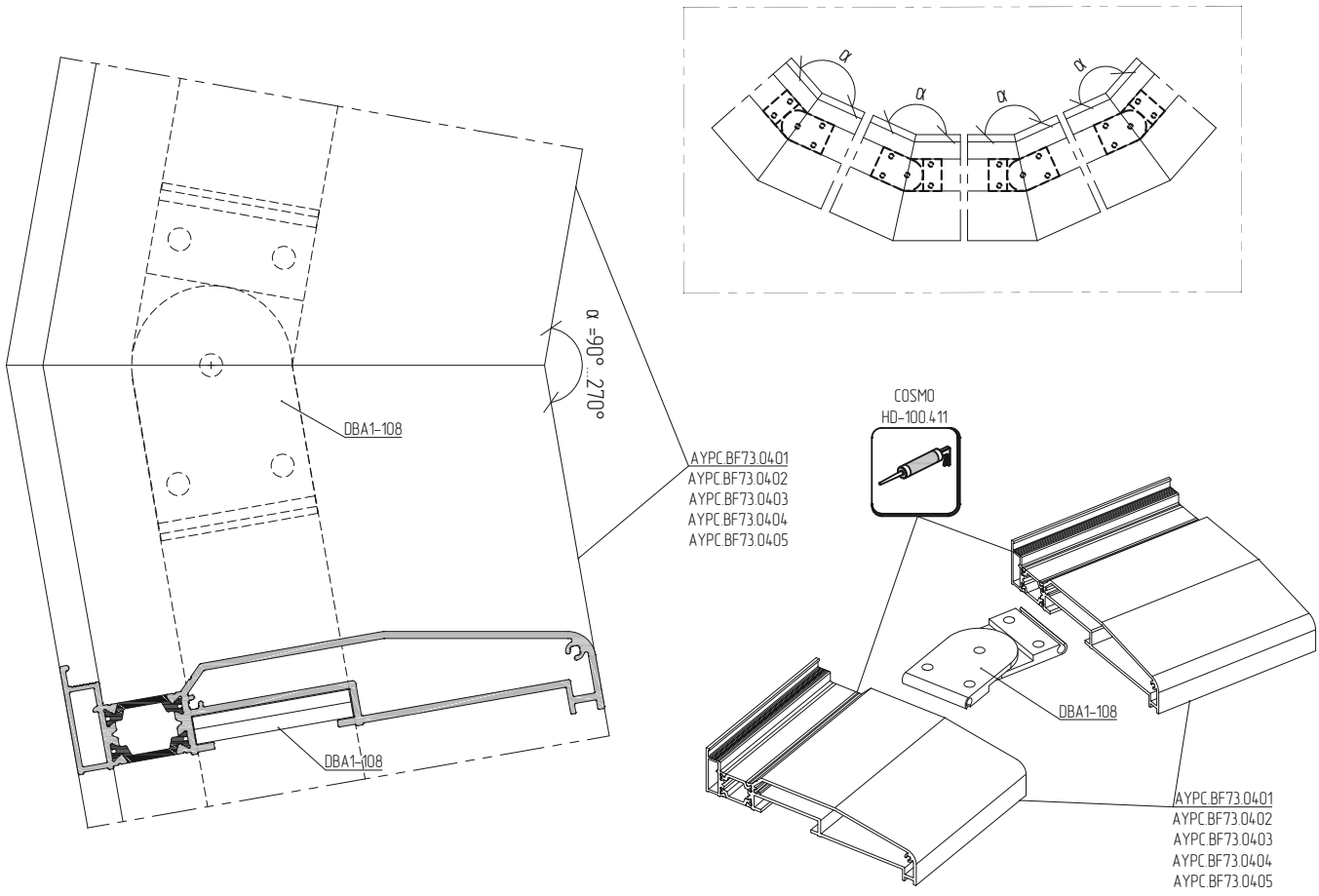
α
α
α
α
α = 90° ... 270°
DBA1-108
DBA1-108
COSMO
HD-100.411
AYPC.BF73.0401
AYPC.BF73.0402
AYPC.BF73.0403
AYPC.BF73.0404
AYPC.BF73.0405
DBA1-108
AYPC.BF73.0401
AYPC.BF73.0402
AYPC.BF73.0403
AYPC.BF73.0404
AYPC.BF73.0405

ALUTECH ALTW72
Windows and doors
with thermal break

STANDARD JUNCTIONS

08.01.01 Windows

08.02.01 Doors

Typical joints of window units

Installation into the aperture with rebated jambs

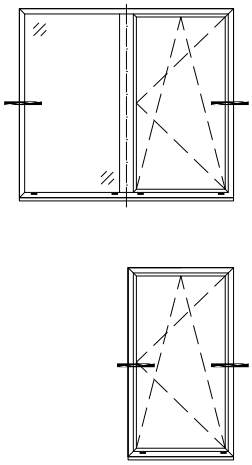

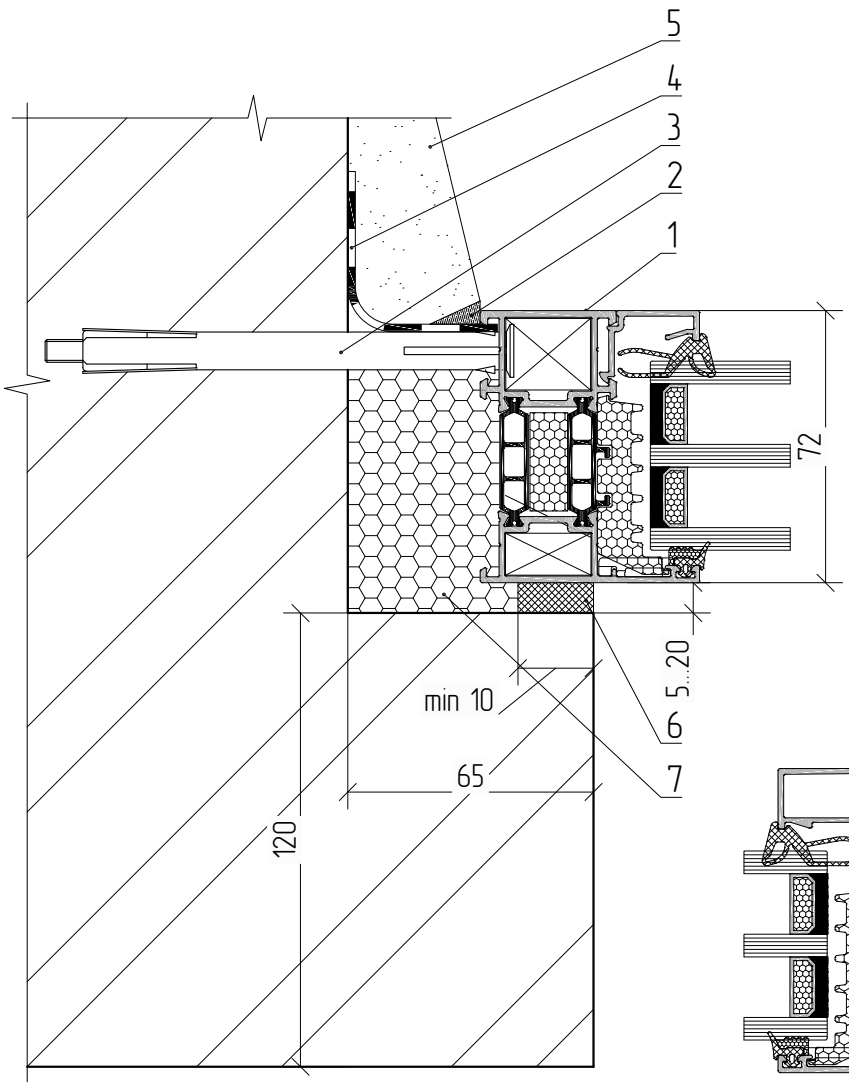

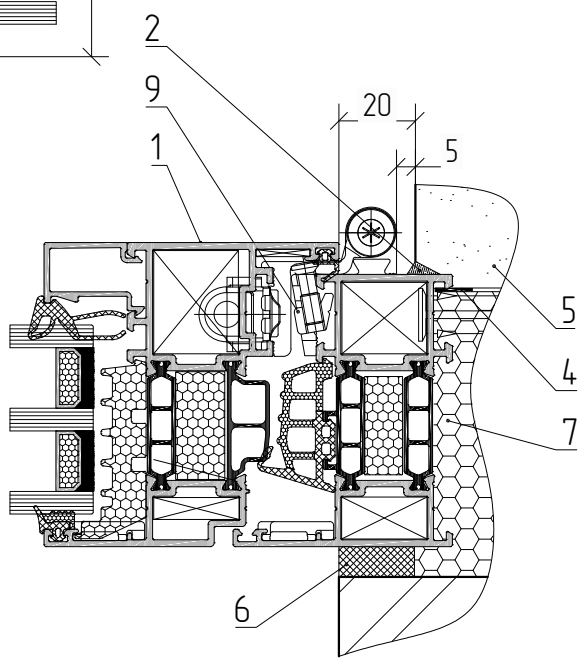

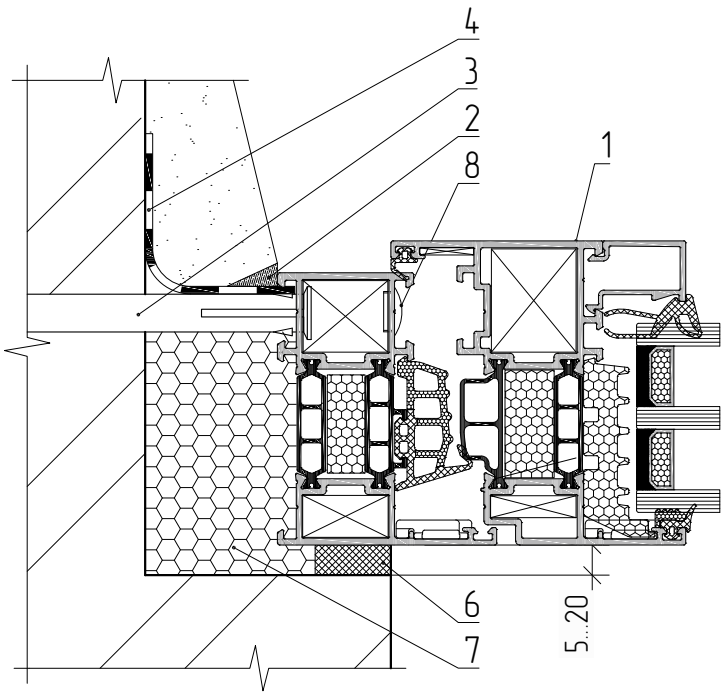

1 – Window unit
2 – Silicone sealant
3 – Anchor device (frame anchor ⌀8 mm)
4 – Vapor barrier self-stick tape (vapor barrier sealant)
5 – Flanning (finishing mortar)
6 – Expandable vapor-permeable insulating tape
7 – Foam seal
8 – Decorative plug
9 – Hinge

While installation into the wall aperture using rebated jambs, the recommended entry should be at least 10 mm

Typical joints of window units

Installation into the aperture with rebated jambs. Top

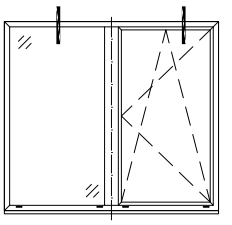

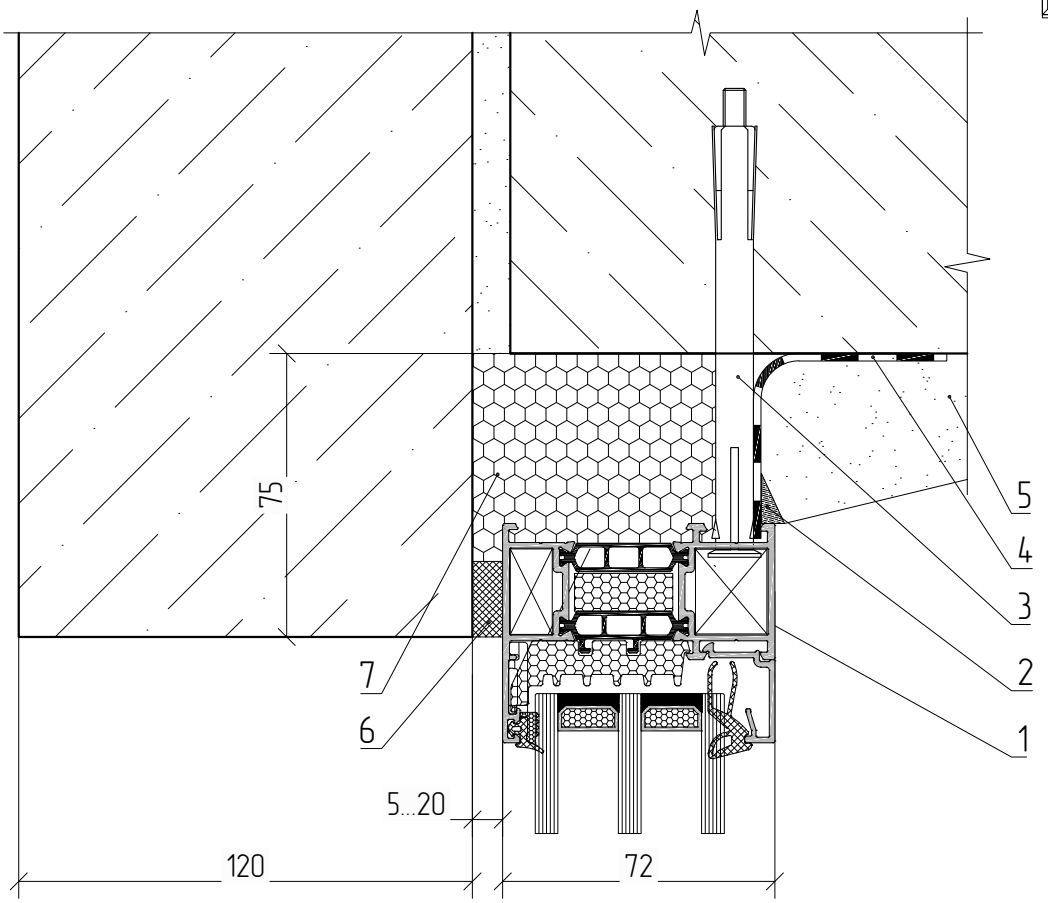

1 – Window unit
2 – Silicone sealant
3 – Anchor device (frame anchor ø8 mm)
4 – Vapor barrier self-stick tape (vapor barrier sealant)
5 – Flanning (finishing mortar)
6 – Expandable vapor-permeable insulating tape
(Expandable vapor-permeable insulating tape)
7 – Foam seal
8 – Decorative plug

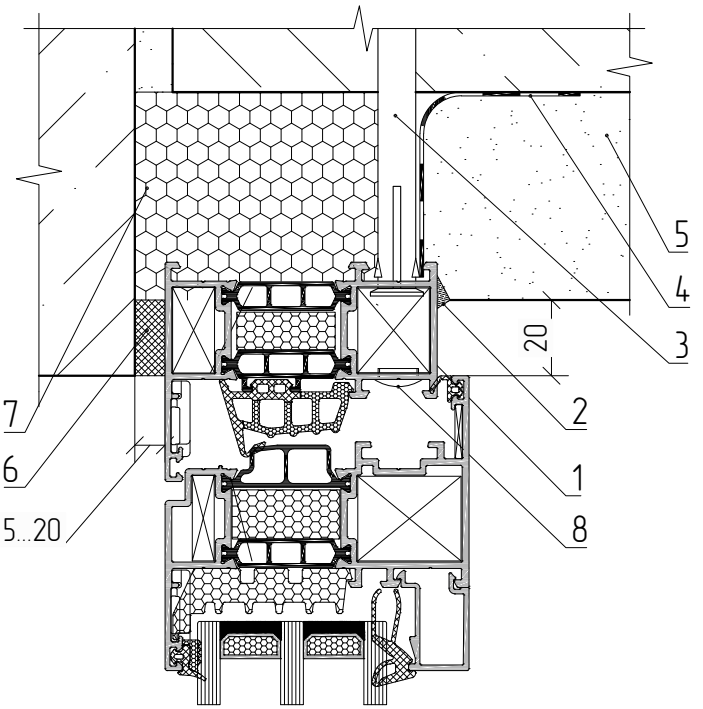

While installation into the wall aperture using rebated jambs, the recommended entry should be at least 10 mm

Typical joints of window units

Installation into the aperture with rebated jambs. Bottom

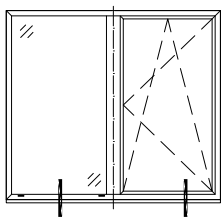

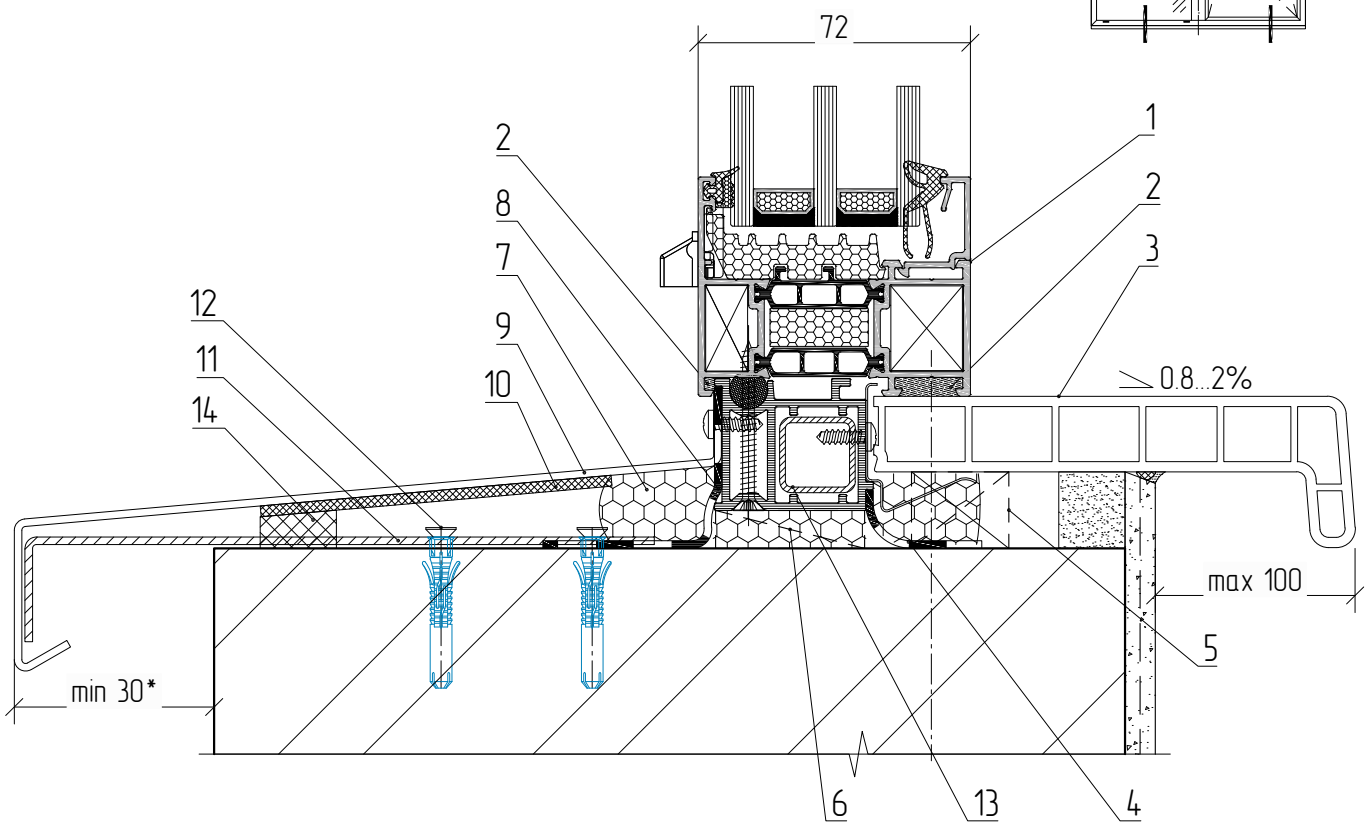

1 – Window unit
2 – Silicone sealant
3 – Window stool (shown for clarity)
4 – Vapor barrier self-stick tape (vapor barrier sealant)
5 – Support block
6 – Thrust shoe
7 – Foam seal
8 – Waterproof vapor-permeable tape (vapor-permeable sealant)
9 – Drain
10 – Soundproofing insert
11 – Drain bracket
12 – Expansion anchor
13 – Tube 20x20x2
14 – Expandable vapor-permeable insulating tape

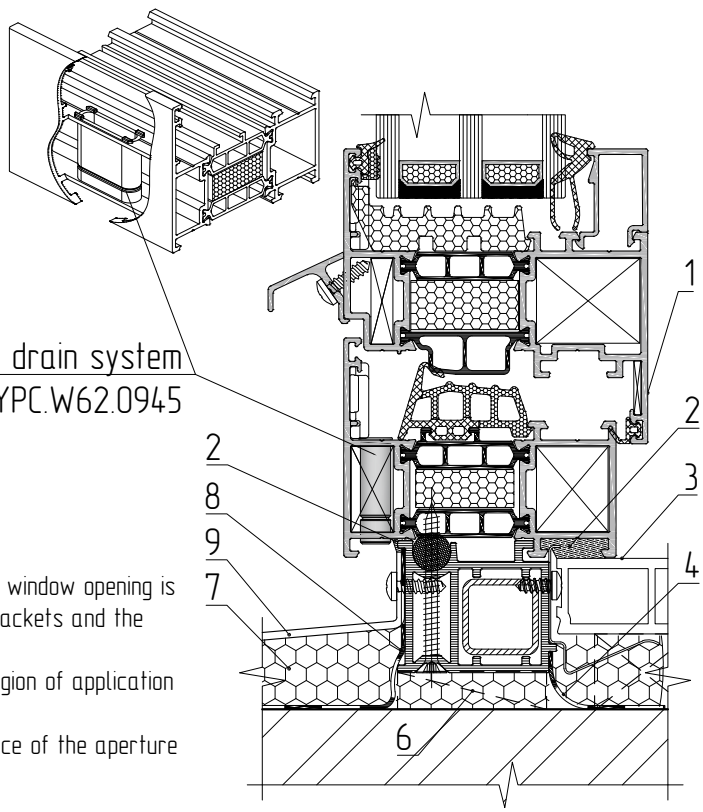

If the drain profile is more than 150 mm and the width of the window opening is more than 900 mm the drain is additionally attached to metal brackets and the brackets –to the bottom of the aperture with expanding dowel.

Overlap of the drain profile on the facade depends on the region of application (from 50 to 70 mm for the Republic of Belarus)

Cement-sand screed of the foam seal is applied to the surface of the aperture

Typical joints of window units

Installation into the aperture with rebated jambs. Side

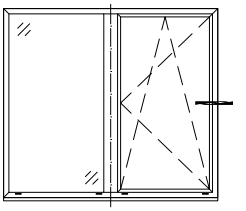

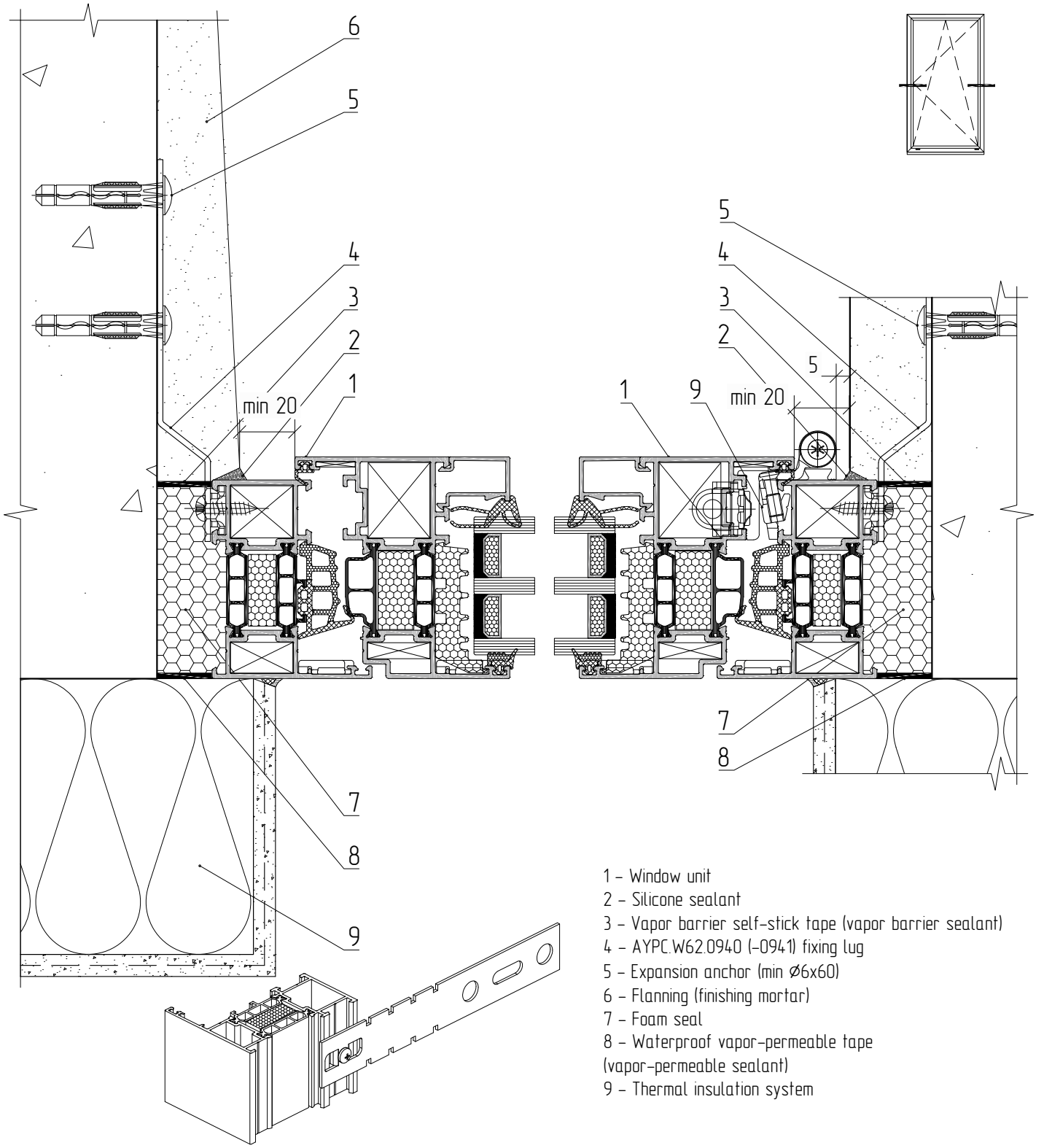

1 – Window unit
2 – Silicone sealant
3 – Vapor barrier self-stick tape (vapor barrier sealant)
4 – AYPC.W62.0940 (-0941) fixing lug
5 – Expansion anchor (min Ø6x60)
6 – Flanning (finishing mortar)
7 – Foam seal
8 – Waterproof vapor-permeable tape (vapor-permeable sealant)
9 – Thermal insulation system

Typical joints of window units

Installation into the aperture without rebated jambs. Top

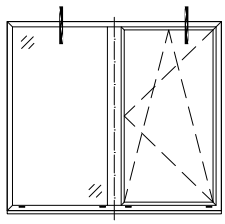

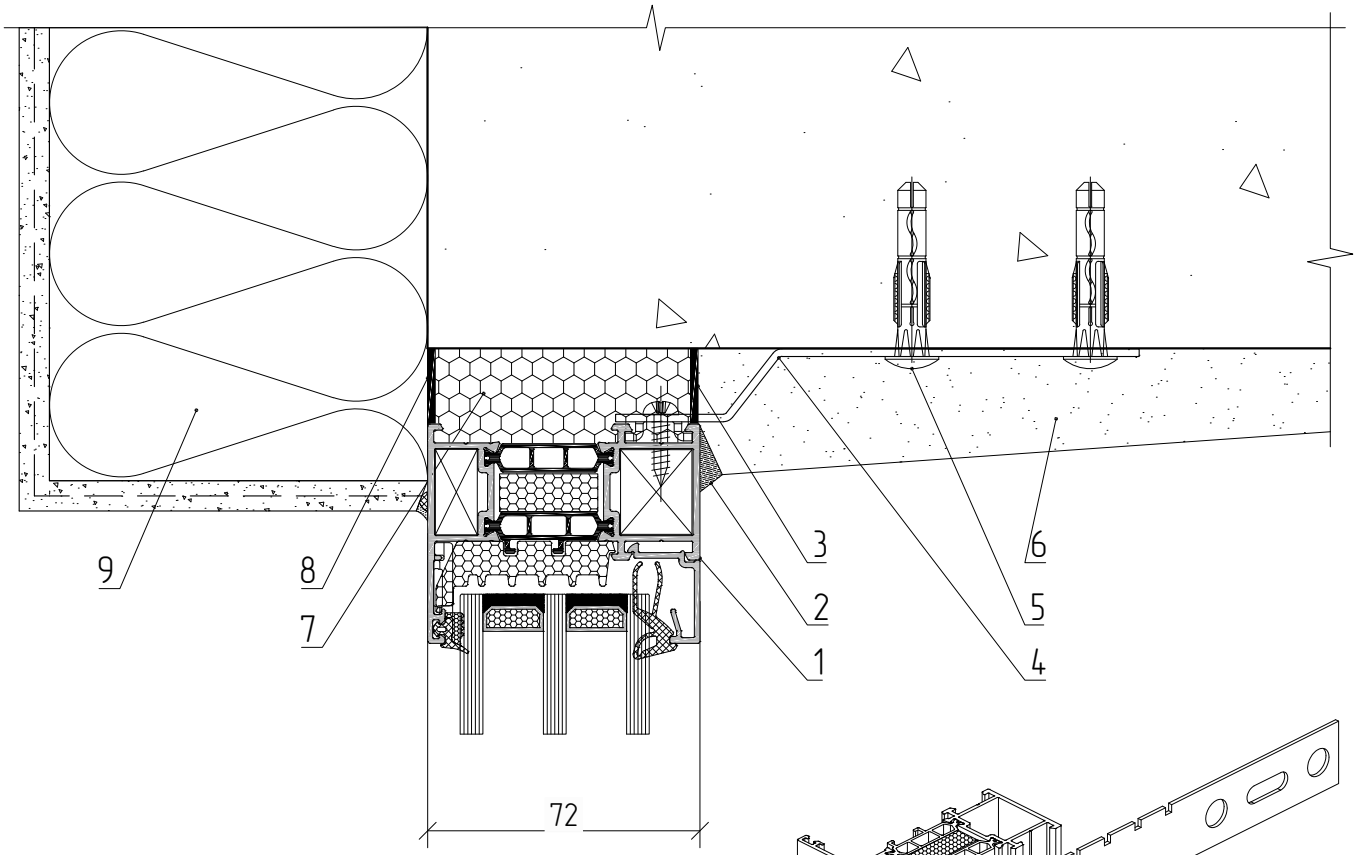

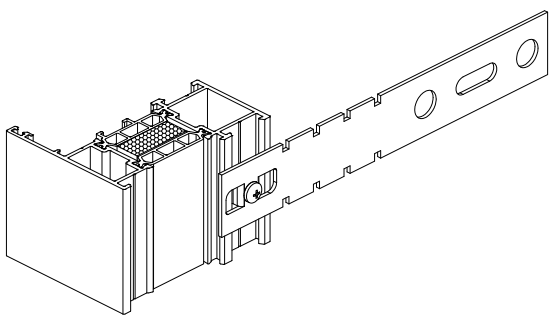

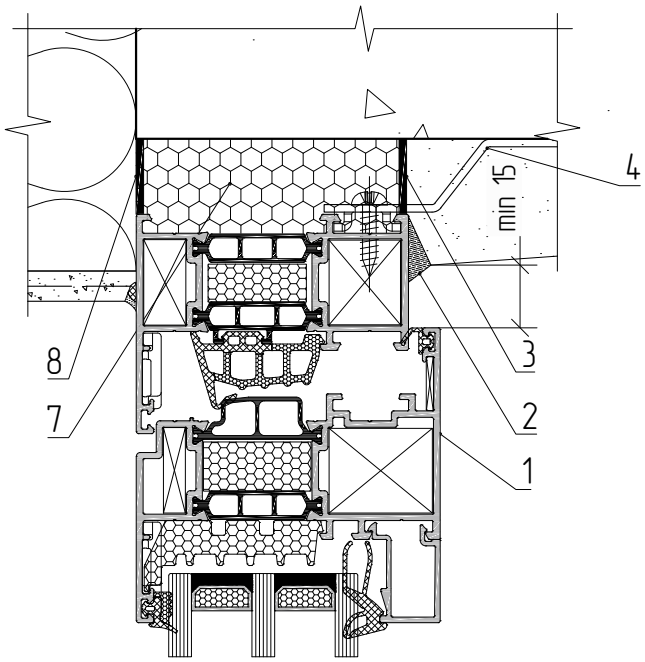

1 – Window unit
2 – Silicone sealant
3 – Vapor barrier self-stick tape (vapor barrier sealant)
4 – AYPC.W62.0940 (–0941) fixing lug
5 – Expansion anchor (min Ø6x60)
6 – Flanning (finishing mortar)
7 – Foam seal
8 – Waterproof vapor-permeable tape (vapor-permeable sealant)
9 – Thermal insulation system

Typical joints of window units

Installation into the aperture without rebated jambs. Bottom

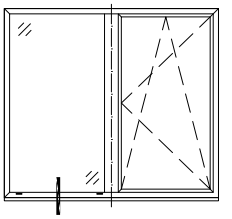

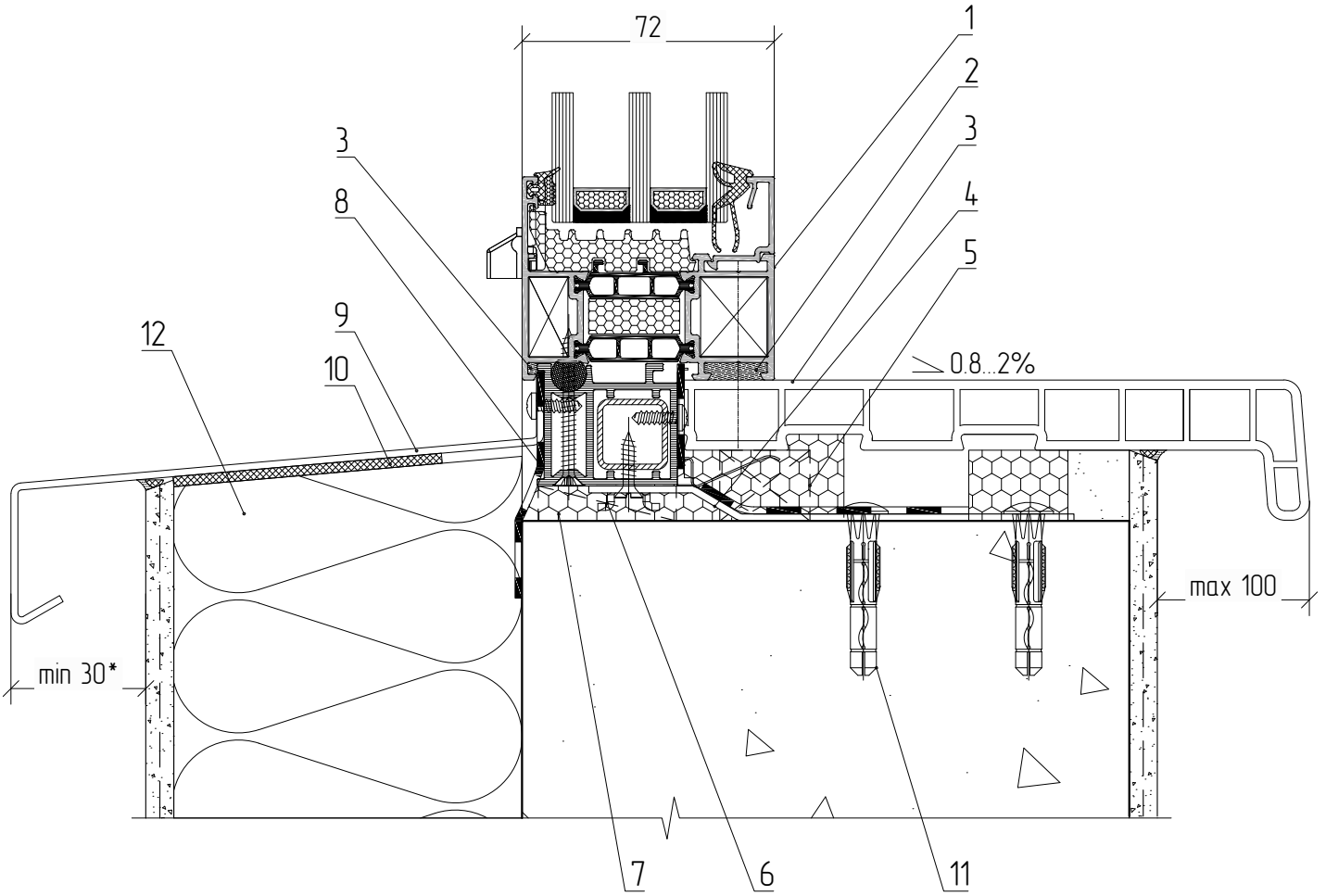

1 – Window unit
2 – Silicone sealant
3 – Window stool (shown for clarity)
4 – Vapor barrier self adhesive tape (vapor barrier sealant)
5 – Support block
6 – Thrust shoe
7 – Foam seal
8 – Waterproof vapor-permeable tape (vapor-permeable sealant)
9 – Drain
10 – Assembly adhesive
11 – Expansion anchor (min Ø6x60)
12 – Thermal insulation system

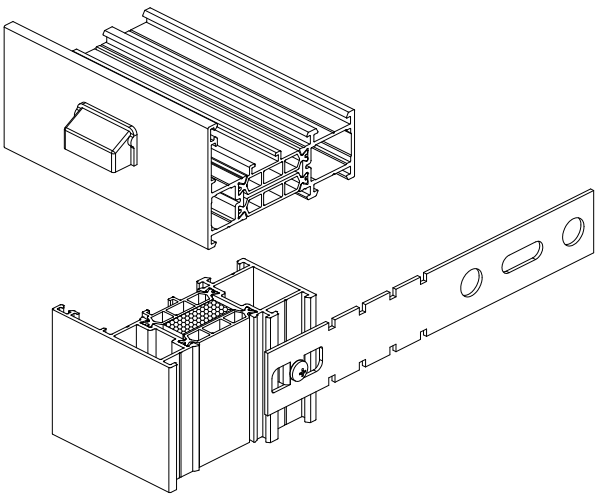

*Overlap of the drain profile on the facade depends on the region of application (from 50 to 70 mm for the Republic of Belarus)

Typical joints of window units

Side adjunction to the aperture with rebated jambs

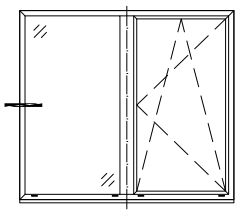

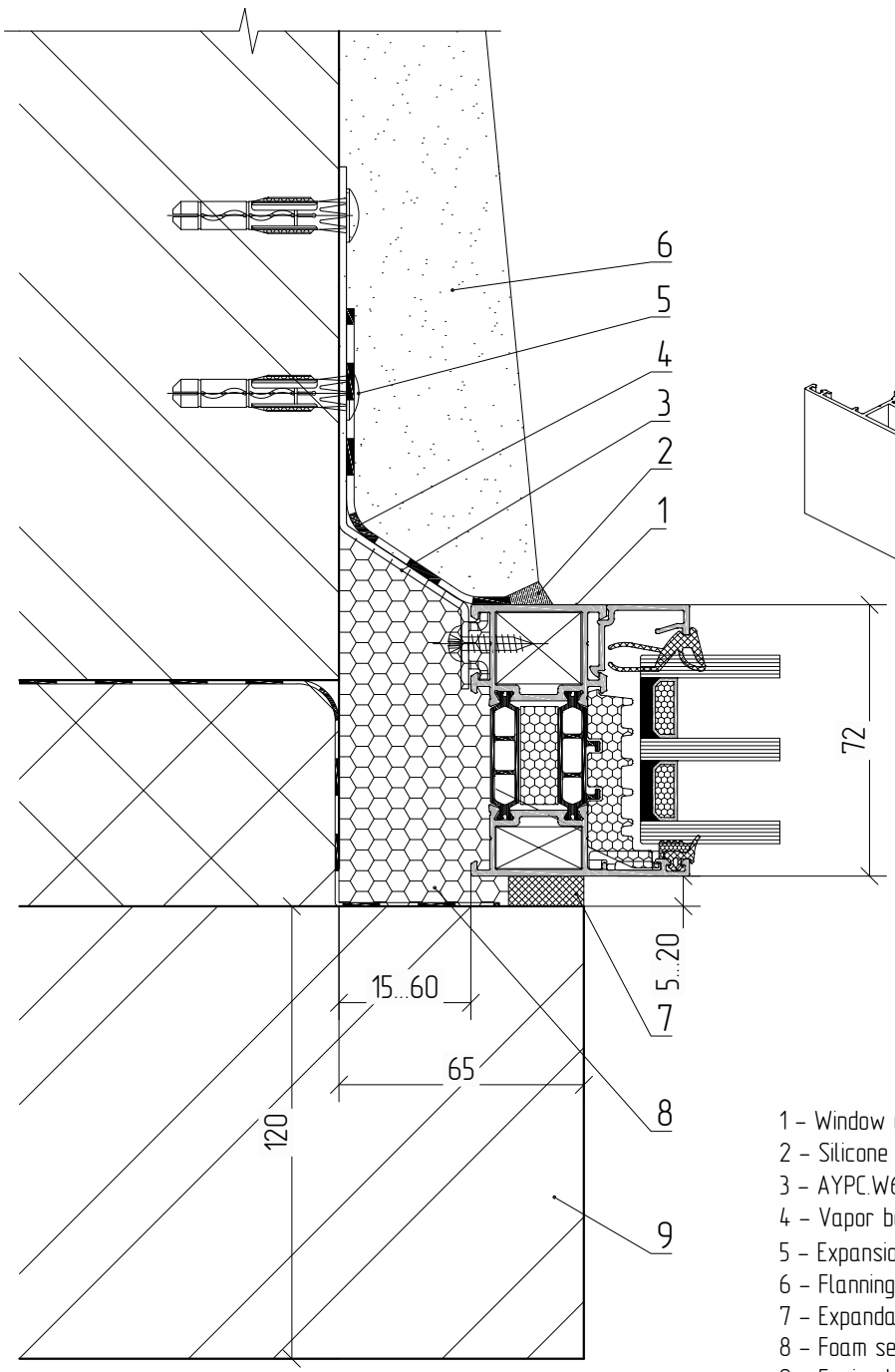

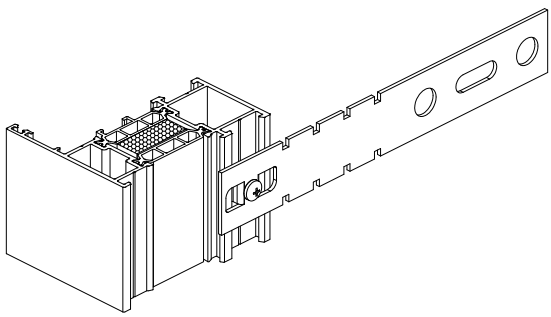

1 – Window unit
2 – Silicone sealant
3 – AYPC.W62.0940 (–0941) fixing lug
4 – Vapor barrier self adhesive tape (vapor barrier sealant)
5 – Expansion anchor (min Ø6x60)
6 – Flanning (finishing mortar)
7 – Expandable vapor-permeable iinsulating tape;
8 – Foam seal
9 – Facing brick

While installation into the wall aperture using rebated jambs, the recommended entry should be at least 10 mm
It is not allowed to apply a plaster layer, putty or paint on the vapor-permeable material of the field weld outer layer

Typical joints of window units

Top adjunction to the aperture with rebated jambs

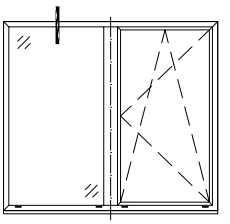

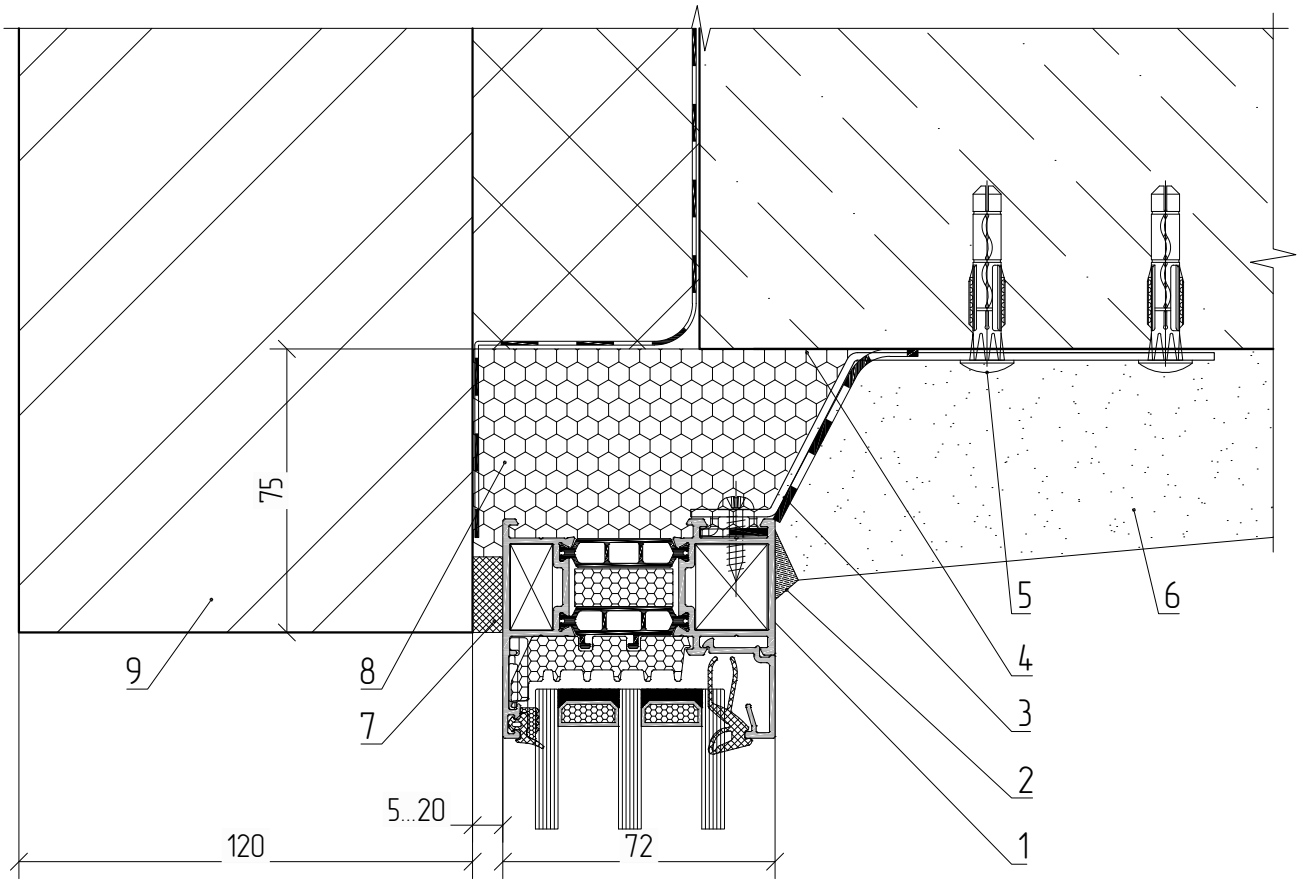

1 – Window unit
2 – Silicone sealant
3 – AYPC.W62.0940 (-0941) fixing lug
4 – Vapor barrier self adhesive tape (vapor barrier sealant)
5 – Expansion anchor (min Ø6x60)
6 – Flanning (finishing mortar)
7 – Expandable vapor-permeable insulating tape
8 – Foam seal
9 – Facing brick

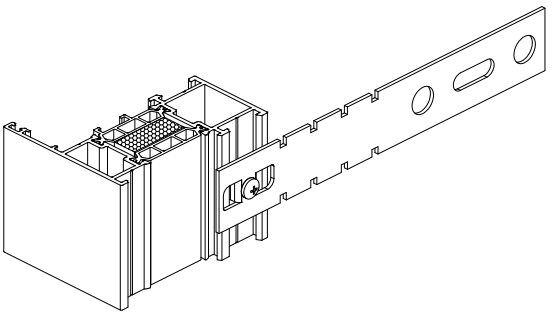

While installation into the wall aperture using rebated jambs, the recommended entry should be at least 10 mm .
It is not allowed to apply a plaster layer, putty or paint on the vapor-permeable material of the field weld outer layer

Typical joints of window units

Bottom adjunction to the aperture

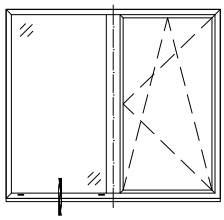

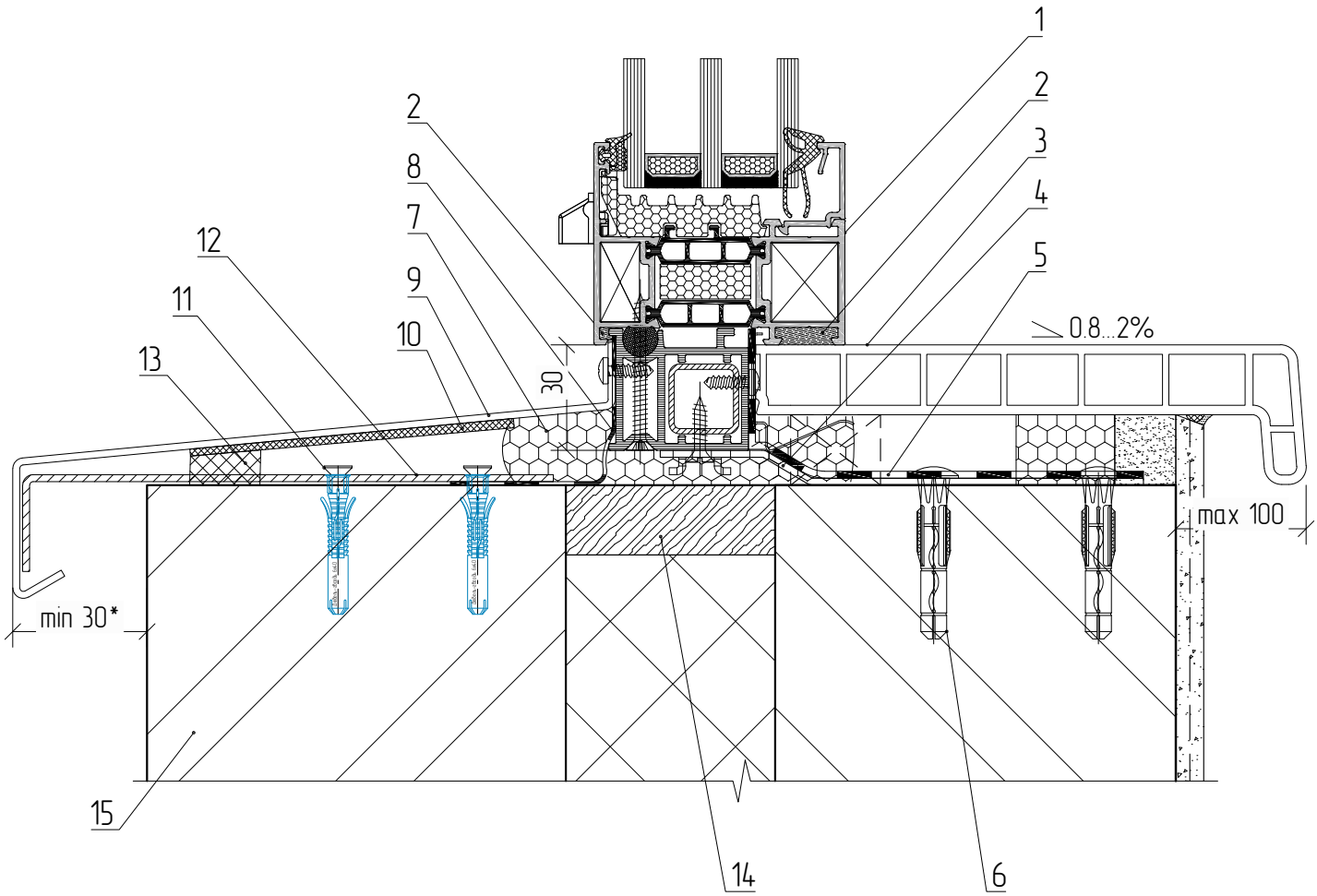

1 – Window unit
2 – Silicone sealant
3 – Window stool (shown for clarity)
4 – AYPC.W62.0940 (–0941) fixing lug
5 – Vapor barrier self adhesive tape (vapor barrier sealant)
6 – Expansion anchor (min Ø6x60)
7 – Foam seal
8 – Waterproof vapor-permeable tape (vapor-permeable sealant)
9 – Drain
10 – Soundproofing insert
11 – Drain bracket
12 – Expansion anchor
13 – Expandable vapor-permeable insulating tape
14 – Insert made of antiseptic timber or leveling layer made of plaster
15 – Facing brick

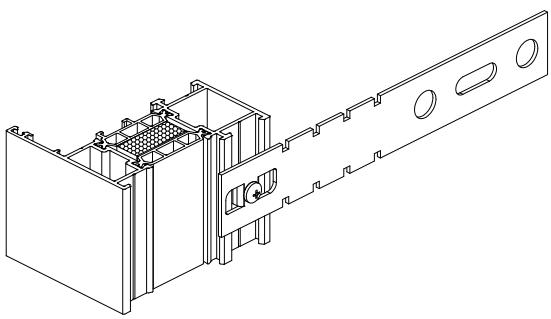

If the drain profile is more than 150 mm and the width of the window opening is more than 900 mm the drain is additionally attached to metal brackets and the brackets –to the bottom of the aperture with expanding dowel.

Overlap of the drain profile on the facade depends on the region of application (from 50 to 70 mm for the Republic of Belarus)

Cement-sand screed of the foam seal is applied to the surface of the aperture

Typical joints of door units

Side adjunction to the aperture with rebated jambs

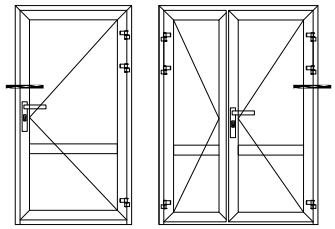

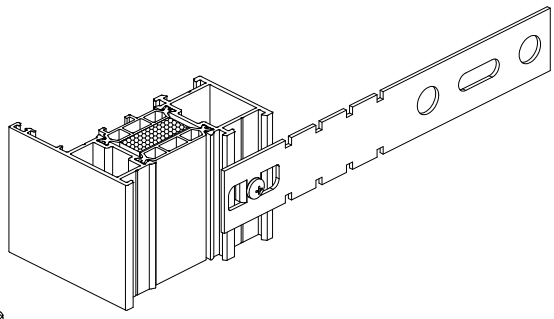

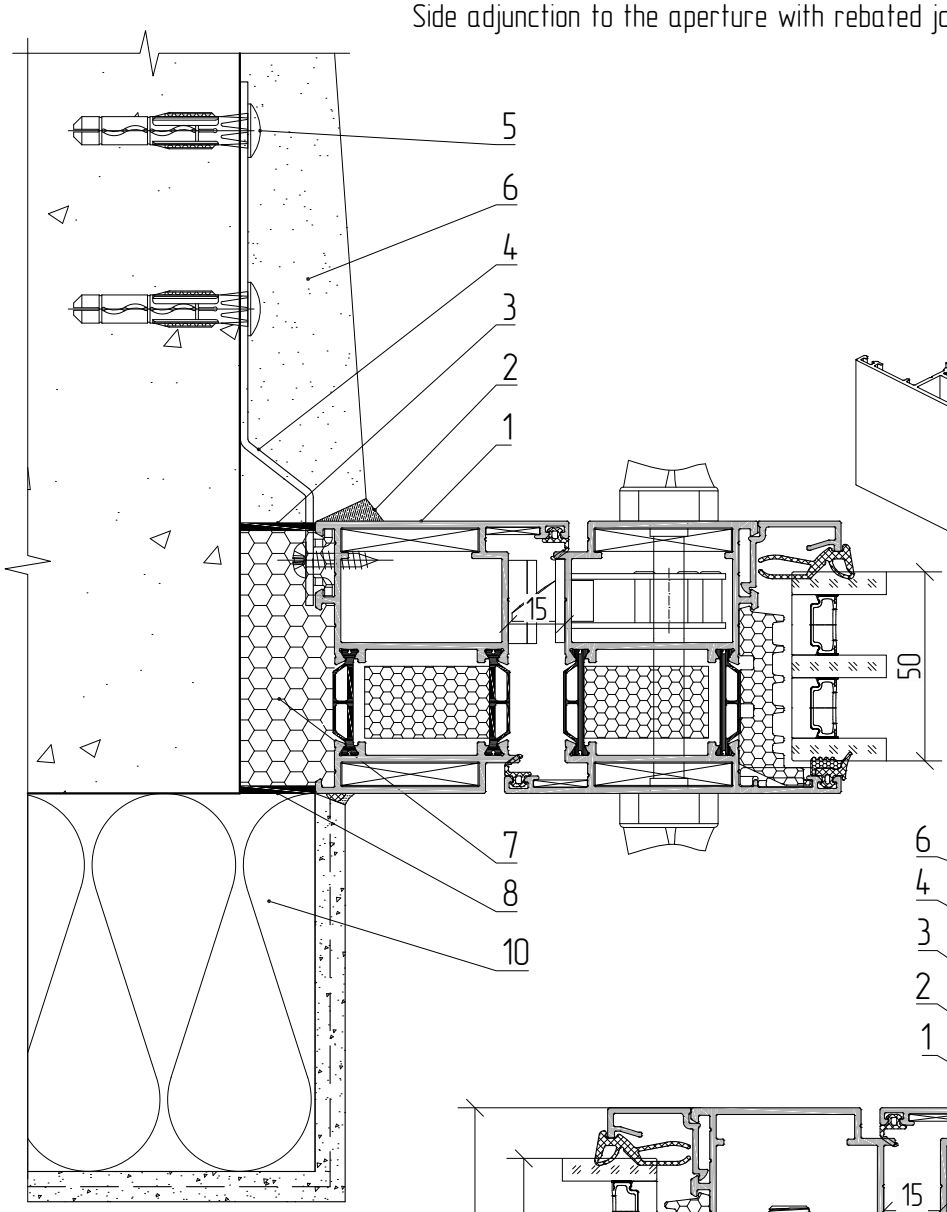

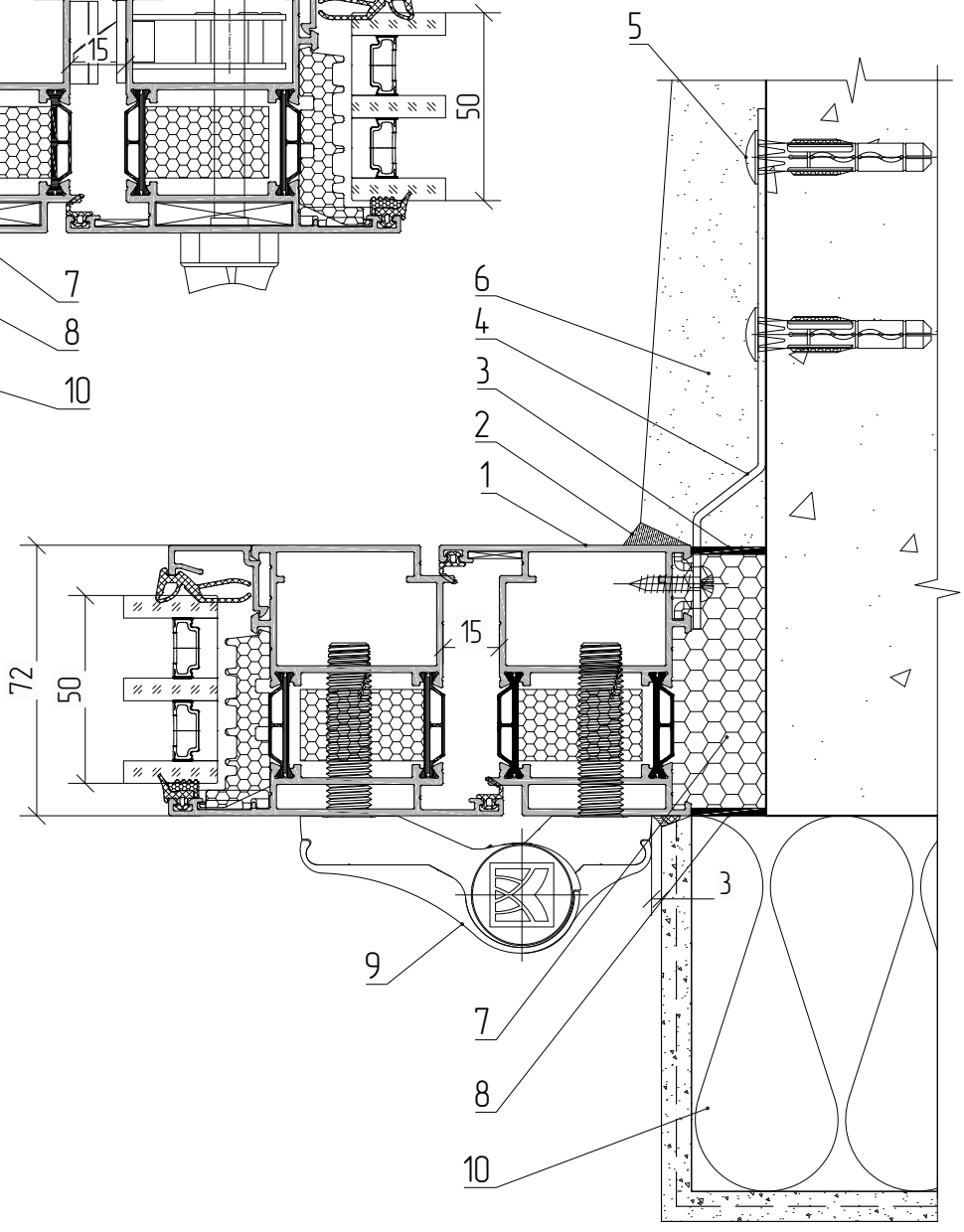

1 – Door unit
2 – Silicone sealant
3 – Vapor barrier self-stick tape (vapor barrier sealant)
4 – AYPC.W62.0940 (-0941) fixing lug
5 – Expansion anchor (min Ш6x60)
6 – Flanning (finishing mortar)
7 – Foam seal
8 – Waterproof vapor-permeable tape (vapor-permeable sealant)
9 – Door hinge
10 – Thermal insulation system

Typical joints of door units

Top adjunction to the aperture without rebated jambs

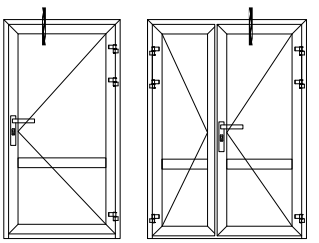

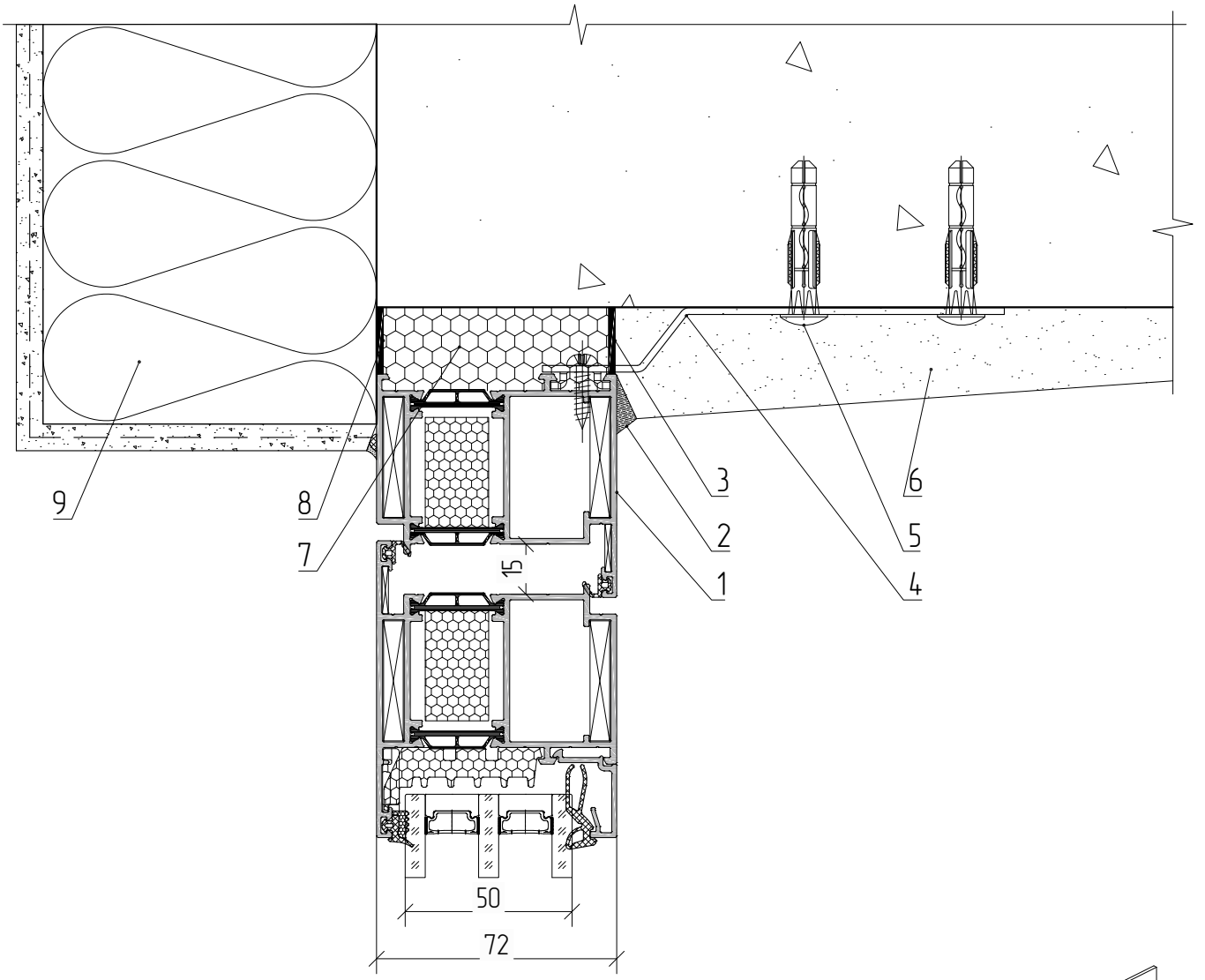

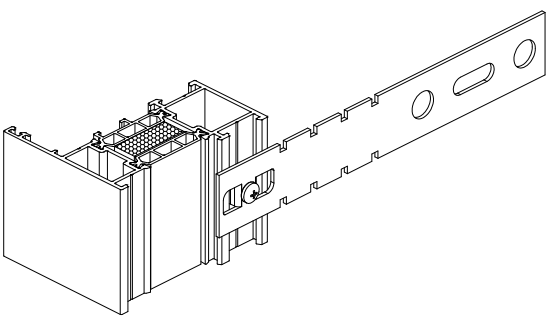

1 – Door unit
2 – Silicone sealant
3 – Vapor barrier self-stick tape (vapor barrier sealant)
4 – AYPC.W62.0940 (-0941) fixing lug
5 – Expansion anchor (min Ш6x60)
6 – Flanning (finishing mortar)
7 – Foam seal
8 – Waterproof vapor-permeable tape (vapor-permeable sealant)
9 – Thermal insulation system

Typical joints of door units

Bottom joint

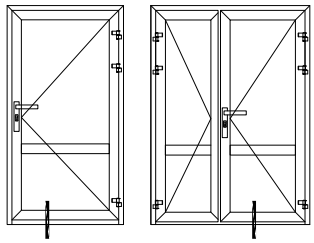

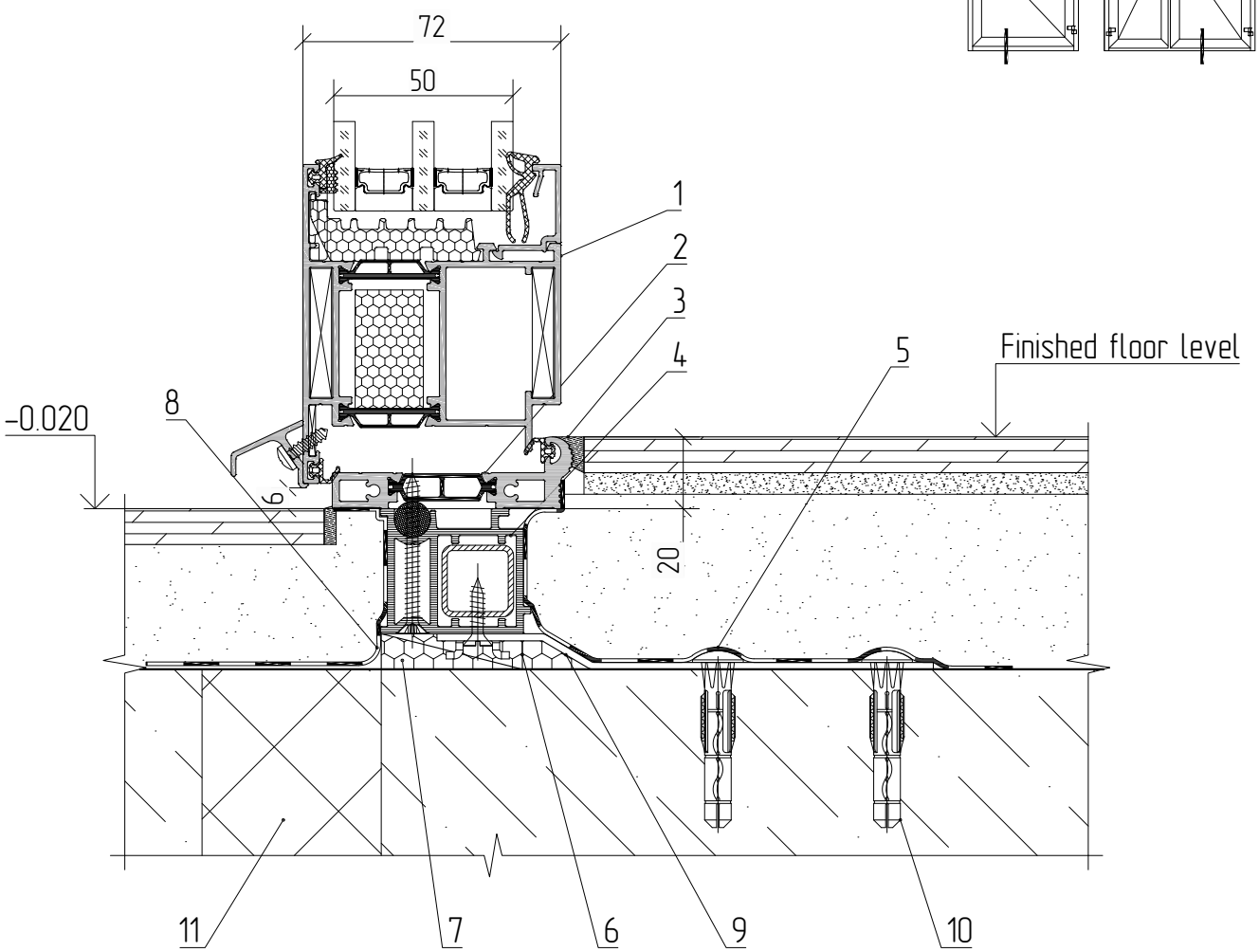

1 – Door unit
2 – Threshold profile
3 – Silicone sealant
4 – Underlying profile
5 – Vapor barrier self-stick tape (vapor barrier sealant)
6 – Thrust shoe
7 – Foam seal
8 – Waterproof vapor-permeable tape (vapor-permeable sealant)
9 – AYPC.W62.0940 (-0941) fixing lug
10 – Expansion anchor (min Ш6x60)
11 – Thermal insulation system

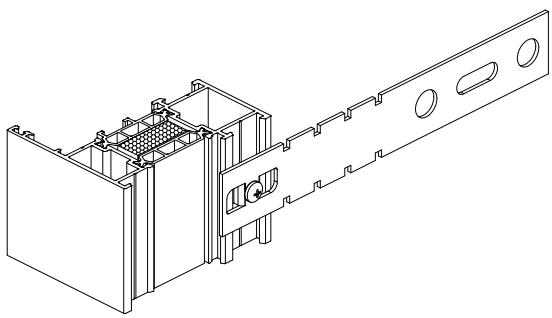

Typical joints of door units

Side adjunction to the aperture with rebated jambs

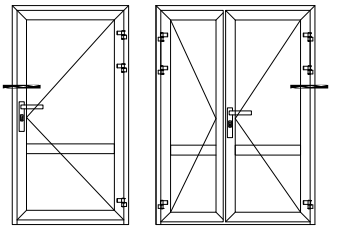

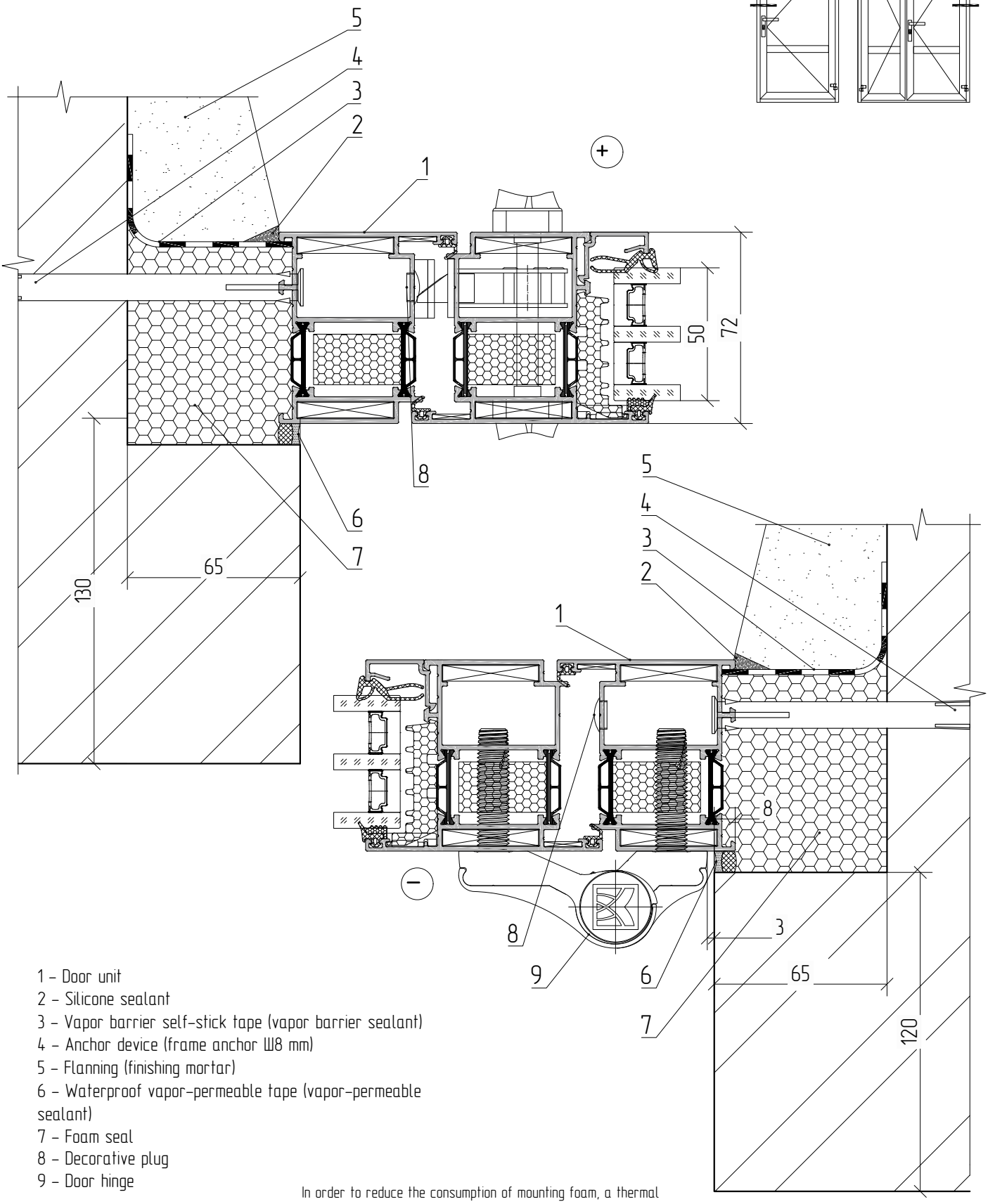

1 – Door unit
2 – Silicone sealant
3 – Vapor barrier self-stick tape (vapor barrier sealant)
4 – Anchor device (frame anchor Ш8 mm)
5 – Flanning (finishing mortar)
6 – Waterproof vapor-permeable tape (vapor-permeable sealant)
7 – Foam seal
8 – Decorative plug
9 – Door hinge

In order to reduce the consumption of mounting foam, a thermal insulation material is inserted into the mounting gap

Typical joints of door units

Top adjunction to the aperture with rebated jambs

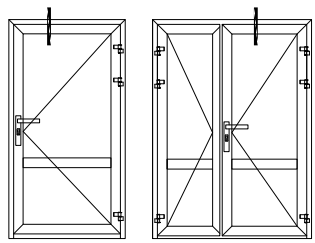

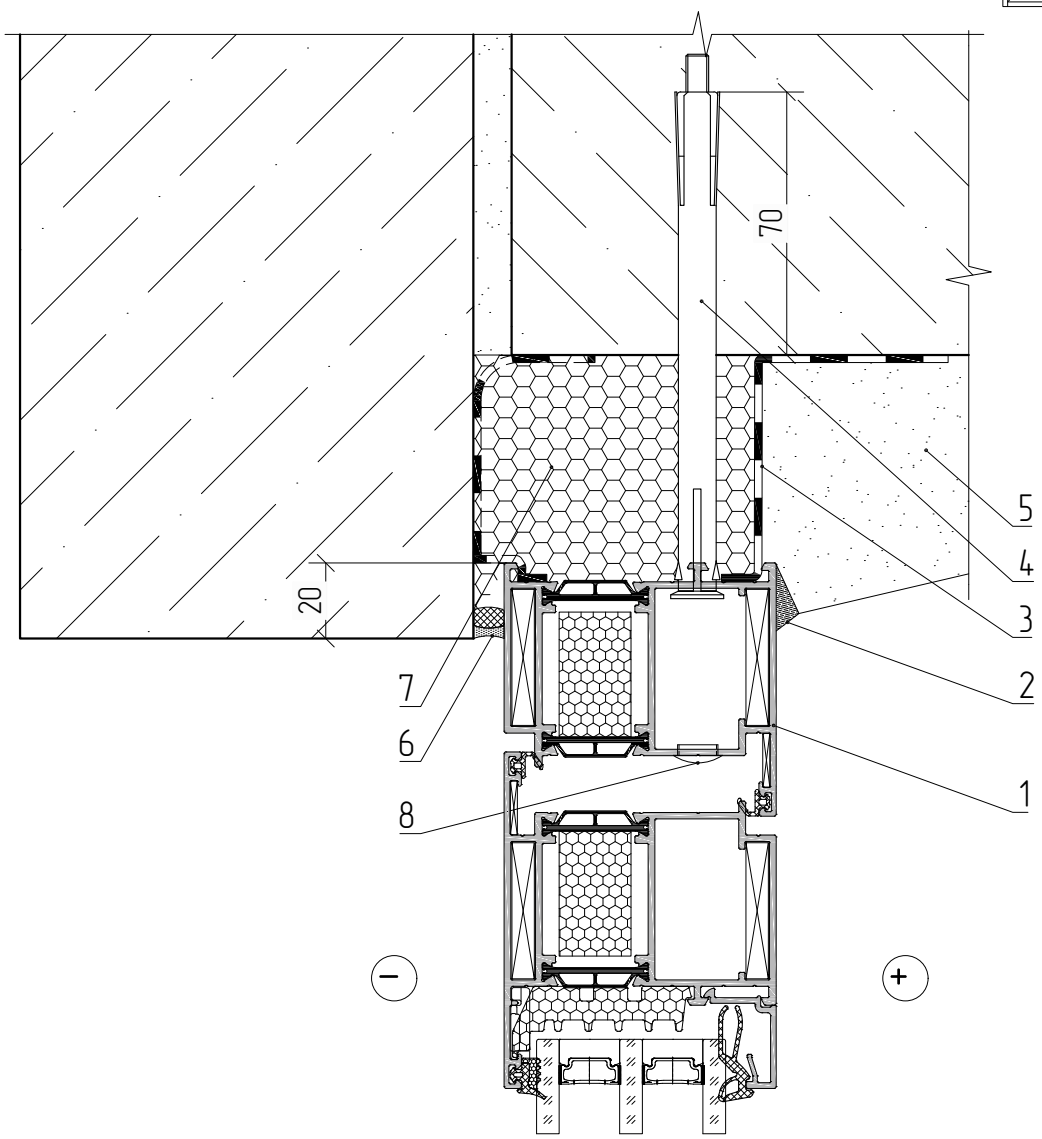

1 – Door unit
2 – Silicone sealant
3 – Vapor barrier self-stick tape (vapor barrier sealant)
4 – Anchor device (frame anchor Ш8 mm)
5 – Flanning (finishing mortar)
6 – Waterproof vapor-permeable tape (vapor-permeable sealant)
7 – Foam seal
8 – Decorative plug

In order to reduce the consumption of mounting foam, a thermal insulation material is inserted into the mounting gap

Typical joints of door units

Bottom joint

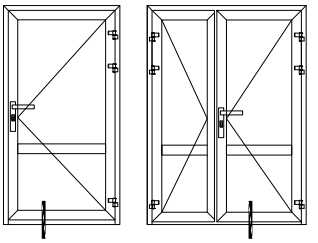

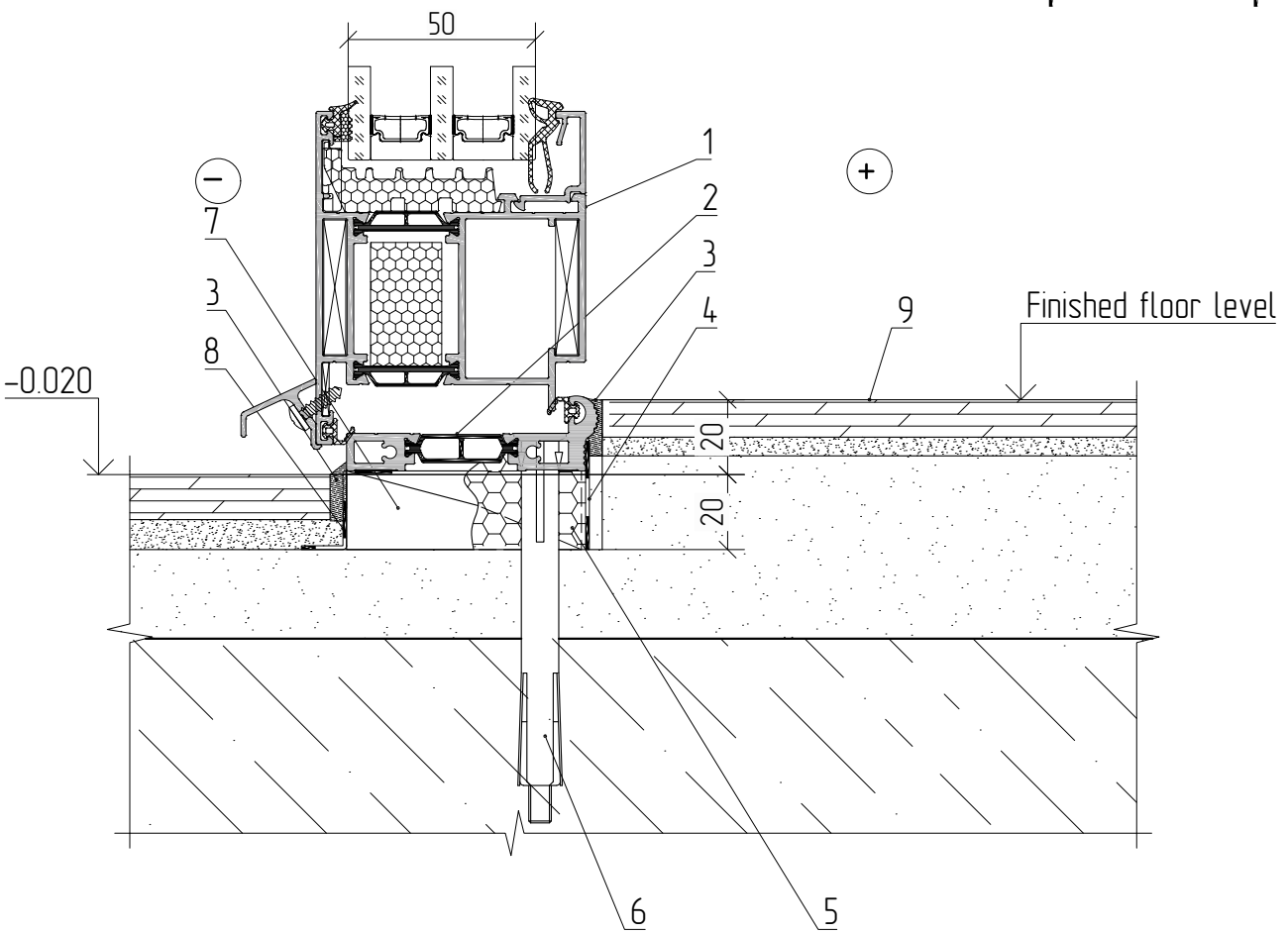

1 – Door unit
2 – Threshold profile
3 – Silicone sealant
4 – Vapor barrier self-stick tape (vapor barrier sealant)
5 – Foam seal
6 – Anchor device (frame anchor Ш8 mm)
7 – Thrust shoe
8 – Waterproof vapor-permeable tape (vapor-permeable sealant)
9 – Floor device

The ALT W72 system is designed to fabricate windows, doors and frames meeting high requirements to thermal and sound insulation. The range of system profiles allows to use efficiently the materials when designing and assembling windows and doors of various dimensions and purpose.

The advantage of ALT W72 system is its high level of thermal and sound insulation. The use of modern materials and innovative design methods allowed to create a system product for energy-efficient construction.

Certified by TÜV THÜRINGEN ISO 9001 / ID:15 100 2010947 www.tuev-thueringen.de

Certified by TÜV THÜRINGEN ISO 14001 / ID:15 104 191716 www.tuev-thueringen.de

QUALICOAT SEASIDE Licence № 3900

QUALITY LABEL INTERNATIONAL Qualanod ARCHITECTURE ISO 9001:2008 Licence № 3000

AluminTechno JLLC
tel.: +375 17 311 05 00
fax: +375 17 311 05 01
e-mail: market@alt.by

Certificate № 800017207
issued by the Ministry of Foreign Affairs
of the Republic of Belarus
03.12.2002 № 800017207

www.alutech-group.com

Art. R17230104
05.2021